FT. WORTH, TEXAS FORT WORTH CENTRAL CITY PRELIMINARY DESIGN SOL. NO. XXXX

US ARMY CORPS
OF ENGINEERS
Ft. Worth District

PRELIMINARY DESIGN

# FORT WORTH CENTRAL CITY
# FORT WORTH, TEXAS

## CIVIL / STRUCTURAL PRELIMINARY DESIGN

APPENDIX C
VOLUME II - PLANS

JANUARY 2005

**NOT FOR CONSTRUCTION**
THIS DOCUMENT IS RELEASED FOR THE PURPOSE OF INTERIM REVIEW UNDER THE AUTHORITY OF DONALD R FUNDERLIC TEXAS NO: 61169 ON DATE: 01/13/2005 IT IS NOT TO BE USED FOR CONSTRUCTION, BIDDING OR PERMIT PURPOSES.

CDM

TARRANT REGIONAL WATER DISTRICT

IN ASSOCIATION WITH:

Freese and Nichols

LOPEZGARCIA GROUP
100 E. 15th Street
Suite 200
Fort Worth, Texas 76102
www.lggroupfwc.com
(817) 390-1000
(817) 885-9487 fax

TCB Turner Collie & Braden Inc.
Engineers • Planners • Project Managers

FORT WORTH CENTRAL CITY CONTR. NO. XXXXX SOL. NO. XXXX FORT WORTH, TEXAS

# INDEX OF DRAWINGS

| DRAWING IDENTIFICATION NUMBER | DRAWING FILE NAME | TITLE/DESCRIPTION |
|---|---|---|
| G-1 | G-001001 | COVER SHEET |
| | | |
| GI-1 | GI001002 | DRAWING INDEX AND LEGEND |
| GI-2 | GI402003 | PROJECT VICINITY AND BYPASS CHANNEL LOCATION MAP |
| | | |
| GR-1 | GR601004 | BYPASS CHANNEL ALIGNMENT AND CONTROL TABLES |
| GR-2 | GR402005 | BORING LOCATION MAP |
| | | |
| | | CIVIL INDEX |
| C-1 | C-401006 | BYPASS CHANNEL – SECTION LOCATION MAP |
| C-2 | C-402007 | BYPASS CHANNEL – KEY MAP |
| | | |
| CG-1 | CG401008 | BYPASS CHANNEL – GRADING PLAN – LOWER BYPASS |
| CG-2 | CG402009 | BYPASS CHANNEL – GRADING PLAN – UPPER BYPASS |
| CG-3 | CG103010 | BYPASS CHANNEL – PLAN AND PROFILE – STA. 00+00 TO STA. 3+50 |
| CG-4 | CG104011 | BYPASS CHANNEL – PLAN AND PROFILE – STA. 3+50 TO STA. 16+00 |
| CG-5 | CG105012 | BYPASS CHANNEL – PLAN AND PROFILE – STA. 16+00 TO STA. 28+00 |
| CG-6 | CG106013 | BYPASS CHANNEL – PLAN AND PROFILE – STA. 28+00 TO STA. 40+00 |
| CG-7 | CG107014 | BYPASS CHANNEL – PLAN AND PROFILE – STA. 40+00 TO STA. 52+00 |
| CG-8 | CG108015 | BYPASS CHANNEL – PLAN AND PROFILE – STA. 52+00 TO STA. 64+00 |
| CG-9 | CG109016 | BYPASS CHANNEL – PLAN AND PROFILE – STA. 64+00 TO STA. 75+00 |
| CG-10 | CG110017 | BYPASS CHANNEL – PLAN AND PROFILE – STA. 75+00 TO END STA |
| CG-11 | CG011018 | BYPASS CHANNEL – TYPICAL SECTIONS – SHEET 1 OF 3 |
| CG-12 | CG012019 | BYPASS CHANNEL – TYPICAL SECTIONS – SHEET 2 OF 3 |
| CG-13 | CG013020 | BYPASS CHANNEL – TYPICAL SECTIONS – SHEET 3 OF 3 |
| CG-14 | CG114021 | BYPASS CHANNEL – GRADING PLAN – TRWD GATE STRUCTURE |
| CG-15 | CG115022 | BYPASS CHANNEL – GRADING PLAN – CLEAR FORK GATE STRUCTURE |
| CG-16 | CG116023 | VALLEY STORAGE MITIGATION – GRADING PLAN – RIVERBEND SITE XXXVIII |
| CG-17 | CG117024 | VALLEY STORAGE MITIGATION – GRADING PLAN – RIVERBEND SITE XXXVIII |
| CG-18 | CG118025 | VALLEY STORAGE MITIGATION – GRADING PLAN – RIVERBEND SITE XXXVIII |
| CG-19 | CG119026 | VALLEY STORAGE MITIGATION – GRADING PLAN – RIVERBEND SITE XXXVIII |
| CG-20 | CG320027 | VALLEY STORAGE MITIGATION – CROSS SECTIONS – RIVERBEND SITE XXXVIII |
| CG-21 | CG321028 | VALLEY STORAGE MITIGATION – CROSS SECTIONS – RIVERBEND SITE XXXVIII |
| CG-22 | CG122029 | VALLEY STORAGE MITIGATION – GRADING PLAN – DOWNSTREAM SITE II |
| CG-23 | CG123030 | VALLEY STORAGE MITIGATION – GRADING PLAN – DOWNSTREAM SITES III & IV |
| CG-24 | CG124031 | VALLEY STORAGE MITIGATION – GRADING PLAN – DOWNSTREAM SITES V & VI |
| CG-25 | CG125032 | VALLEY STORAGE MITIGATION – GRADING PLAN – DOWNSTREAM SITE XVI |
| CG-26 | CG326033 | VALLEY STORAGE MITIGATION – CROSS SECTIONS – DOWNSTREAM SITES |
| CG-27 | CG327034 | VALLEY STORAGE MITIGATION – CROSS SECTIONS – DOWNSTREAM SITES |
| CG-28 | CG328035 | VALLEY STORAGE MITIGATION – CROSS SECTIONS – DOWNSTREAM SITES |
| | | |
| CI-1 | CI101036 | INTERIOR WATER FEATURE – GRADING PLAN |
| CI-2 | CI102037 | STORM PUMP STATION – GENERAL LOCATION PLAN |
| CI-3 | CI103038 | STORM PUMP STATION – SITE PLAN |
| | | |
| | | TRANSPORTATION |
| CP-1 | CP401039 | TRANSPORTATION SITE PLAN |
| CP-2 | CP202040 | N.MAIN STREET – PROFILE |
| CP-3 | CP203041 | HENDERSON STREET – PROFILE |
| CP-4 | CP204042 | WHITE SETTLEMENT ROAD– PROFILE |
| CP-5 | CP305043 | TYPICAL BRIDGE SECTIONS |
| CP-6 | CP206044 | PEDESTRIAN BRIDGE – PROFILES |
| CP-7 | CP307045 | PEDESTRIAN BRIDGE – SECTIONS |
| CP-8 | CP108046 | UNIVERSITY DRIVE – GRADING PLAN |
| CP-9 | CP109047 | UNIVERSITY DRIVE – PLAN AND PROFILE – STA. 0+00 TO STA. 10+50 |
| CP-10 | CP110048 | UNIVERSITY DRIVE – PLAN AND PROFILE – STA. 10+50 TO STA. 21+70 |
| | | |
| | | SITE PIPING PLANS |
| CU-WA-1 | CU401049 | OVERALL WATER PLAN |
| CU-WA-2 | CU102050 | WATER (POTABLE) PLAN I |
| CU-WA-3 | CU103051 | WATER (POTABLE) PLAN II |
| CU-WA-4 | CU104052 | WATER (POTABLE) PLAN III |
| CU-WA-5 | CU105053 | WATER (POTABLE) PLAN IV |
| CU-SS-6 | CU406054 | OVERALL SANITARY SEWER PLAN |
| CU-SS-7 | CU107055 | SANITARY SEWER PLAN I |
| CU-SS-8 | CU108056 | SANITARY SEWER PLAN II |
| CU-SS-9 | CU109057 | SANITARY SEWER PLAN III |
| CU-SS-10 | CU110058 | SANITARY SEWER PLAN VI |
| CU-ST-11 | CU411059 | OVERALL STORM DRAINAGE PLAN |
| CU-ST-12 | CU112060 | STORM DRAINAGE PLAN I |
| CU-ST-13 | CU113061 | STORM DRAINAGE PLAN II |
| CU-ST-14 | CU114062 | STORM DRAINAGE PLAN III |
| CU-ST-15 | CU115063 | STORM DRAINAGE PLAN IV |
| CU-NG-16 | CG416064 | OVERALL NATURAL GAS PLAN |
| CU-NG-17 | CU117065 | NATURAL GAS PLAN I |
| CU-NG-18 | CU118066 | NATURAL GAS PLAN II |
| CU-EU-19 | CU119067 | OVERALL ELECTRIC UTILITIES PLAN |
| CU-EU-20 | CU720068 | ELECTRIC UTILITIES PLAN I – DEMOLITION |
| CU-EU-21 | CU721069 | ELECTRIC UTILITIES PLAN II – DEMOLITION |
| CU-EU-22 | CU722070 | ELECTRIC UTILITIES PLAN III – DEMOLITION |
| CU-EU-23 | CU723071 | ELECTRIC UTILITIES PLAN IV – DEMOLITION |
| CU-EU-24 | CU124072 | ELECTRIC UTILITIES PLAN V – MODIFICATIONS |
| CU-EU-25 | CU125073 | ELECTRIC UTILITIES PLAN VI – MODIFICATIONS |
| CU-EU-26 | CU126074 | ELECTRIC UTILITIES PLAN VII – MODIFICATIONS |
| CU-EU-27 | CU127075 | ELECTRIC UTILITIES PLAN VIII – TRANSMISSION LINES |
| CU-FO-28 | CU128076 | OVERALL FIBER OPTICS PLAN |
| CU-FO-29 | CU129077 | FIBEROPTICS PLAN I |

| DRAWING IDENTIFICATION NUMBER | DRAWING FILE NAME | TITLE/DESCRIPTION |
|---|---|---|
| CU-CP-30 | CU130078 | OVERALL CABLE PLAN |
| CU-CP-31 | CU131079 | CABLE PLAN I |
| CU-CP-32 | CU132080 | CABLE PLAN II |
| CU-33 | CU133081 | N. SAMUELS AVE. CORRIDOR EXISTING UTILITIES PLAN I |
| CU-34 | CU134082 | N. SAMUELS AVE. CORRIDOR EXISTING UTILITIES PLAN II |
| CU-SC-35 | CU335083 | TYPICAL SECTIONS |
| CU-SD-36 | CU436084 | OVERALL EXISTING SUMP DRAINAGE AREAS |
| CU-SD-37 | CU437085 | OVERALL PROPOSED SUMP DRAINAGE AREA |
| CU-VS-38 | CU138086 | VALLEY STORAGE UTILITIES – SITES XXXVIII – SHEET 1 OF 2 |
| CU-VS-39 | CU139087 | VALLEY STORAGE UTILITIES – SITES XXXVII – SHEET 2 OF 2 |
| CU-VS-40 | CU140088 | VALLEY STORAGE UTILITIES – UNIVERSITY DRIVE |
| CU-VS-41 | CU141089 | VALLEY STORAGE UTILITIES – SITES II, III & IV |
| CU-VS-42 | CU142090 | VALLEY STORAGE UTILITIES – SITES V, VI & XVI |
| | | |
| | | STRUCTURAL INDEX |
| S-1 | S-101091 | TRWD – ISOLATION GATE STRUCTURE – PLAN |
| S-2 | S-302092 | TRWD – ISOLATION GATE STRUCTURE – LONGITUDINAL SECTIONS |
| S-3 | S-303093 | TRWD – ISOLATION GATE STRUCTURE – SECTIONS AT ABUTMENTS |
| S-4A | S-504094 | TRWD – ISOLATION GATE STRUCTURE – ROCK FOUNDATION |
| S-4B | S-504095 | TRWD – ISOLATION GATE STRUCTURE – RCC FOUNDATION |
| S-4C | S-504096 | TRWD – ISOLATION GATE STRUCTURE – PILE FOUNDATION |
| S-5 | S-105097 | TRINITY POINT – ISOLATION GATE STRUCTURE – PLAN |
| S-6 | S-306098 | TRINITY POINT – ISOLATION GATE STRUCTURE – LONGITUDINAL SECTIONS |
| S-7 | S-307099 | TRINITY POINT – ISOLATION GATE STRUCTURE – SECTIONS AT ABUTMENTS |
| S-8A | S-508100 | TRINITY POINT – ISOLATION GATE STRUCTURE – ROCK FOUNDATION |
| S-8B | S-508101 | TRINITY POINT – ISOLATION GATE STRUCTURE – RCC FOUNDATION |
| S-8C | S-508102 | TRINITY POINT – ISOLATION GATE STRUCTURE – PILE FOUNDATION |
| S-9 | S-109103 | CLEAR FORK – ISOLATION GATE STRUCTURE – PLAN |
| S-10 | S-310104 | CLEAR FORK – ISOLATION GATE STRUCTURE – LONGITUDINAL SECTIONS I |
| S-11 | S-311105 | CLEAR FORK – ISOLATION GATE STRUCTURE – LONGITUDINAL SECTIONS II |
| S-12 | S-312106 | CLEAR FORK – ISOLATION GATE STRUCTURE – SECTIONS AT ABUTMENTS |
| S-13A | S-513107 | CLEAR FORK – ISOLATION GATE STRUCTURE – ROCK FOUNDATION |
| S-13B | S-513108 | CLEAR FORK – ISOLATION GATE STRUCTURE WITH FOUNDATION DRAINS |
| S-13C | S-513109 | CLEAR FORK – ISOLATION GATE STRUCTURE – RCC FOUNDATION |
| S-13D | S-513110 | CLEAR FORK – ISOLATION GATE STRUCTURE – PILE FOUNDATION |
| S-14 | S-814111 | TRWD ISOLATION GATE STRUCTURES – STABILITY ANALYSES |
| S-15 | S-815112 | TRINITY POINT ISOLATION GATE STRUCTURES – STABILITY ANALYSES |
| S-16 | S-816113 | CLEAR FORK – ISOLATION GATE STRUCTURES – STABILITY ANALYSES |
| S-17 | S-817114 | ISOLATION GATE STRUCTURE – DETAILS |
| | | |
| | | RETAINING WALLS |
| SB-1 | SB301115 | BYPASS CHANNEL – RETAINING WALLS |
| SB-2 | SB502116 | BYPASS CHANNEL – LOWER AND MID-LEVEL RETAINING WALLS – LOADING CONDITIONS |
| SB-3 | SB503117 | BYPASS CHANNEL – UPPER LEVEL RETAINING WALLS – LOADING CONDITIONS |
| | | |
| | | DAM STRUCTURES |
| SS-1 | SS101118 | SAMUELS AVENUE DAM – GRADING PLAN WITH DIVERSION |
| SS-2 | SS102119 | SAMUELS AVENUE DAM – FINAL GRADING PLAN |
| SS-3 | SS203120 | SAMUELS AVENUE DAM – ELEVATION VIEW OF DAM |
| SS-4 | SS304121 | SAMUELS AVENUE DAM – PLAN AND SECTIONS – SHEET 1 OF 2 |
| SS-5 | SS305122 | SAMUELS AVENUE DAM – PLAN AND SECTIONS – SHEET 2 OF 2 |
| SS-6 | SS506123 | SAMUELS AVENUE DAM – TRAINING WALLS |
| SS-7 | SS307124 | SAMUELS AVENUE DAM – TYPICAL SECTION |
| SS-8 | SS508125 | SAMUELS AVENUE DAM – DAM ON RCC – ROTATIONAL & SLIDING STABILITY ANALYSES |
| SS-9 | SS509126 | SAMUELS AVENUE DAM – DAM ON ROCK – ROTATIONAL STABILITY ANALYSES |
| SS-10 | SS510127 | SAMUELS AVENUE DAM – DAM ON ROCK – SLIDING STABILITY ANALYSES |
| SS-11 | SS511128 | SAMUELS AVENUE DAM – DAM ABUTMENTS – ROTATIONAL STABILITY ANALYSES |
| SS-12 | SS512129 | SAMUELS AVENUE DAM – UPSTREAM TRAINING WALL – SLIDING STABILITY ANALYSES |
| SS-13 | SS513130 | SAMUELS AVENUE DAM – DOWNSTREAM TRAINING WALLS @ 527.0' – ROTATIONAL AND SLIDING STABILITY ANALYSES |
| SS-14 | SS514131 | SAMUELS AVENUE DAM – TRAINING WALLS @ 517.0' – ROTATIONAL STABILITY ANALYSES |
| SS-15 | SS515132 | SAMUELS AVENUE DAM – UPSTREAM TRAINING WALLS @ 517.0' – SLIDING STABILITY ANALYSES |
| SS-16 | SS516133 | SAMUELS AVENUE DAM – DOWNSTREAM TRAINING WALLS @ 517.0' – SLIDING STABILITY ANALYSES |
| SS-17 | SS517134 | SAMUELS AVENUE DAM – TRAINING WALLS @ 507.0' – ROTATIONAL STABILITY ANALYSES |
| SS-18 | SS518135 | SAMUELS AVENUE DAM – UPSTREAM TRAINING WALLS @ 507.0' – SLIDING STABILITY ANALYSES |
| SS-19 | SS519136 | SAMUELS AVENUE DAM – DOWNSTREAM TRAINING WALLS @ 507.0' – SLIDING STABILITY ANALYSES |
| | | |
| | | STORM PUMP STATION |
| SS-20 | SS420137 | STORM PUMP STATION – ENLARGED PLAN |
| SS-21 | SS321138 | STORM PUMP STATION – SECTIONS & ELEVATIONS |
| SS-22 | SS622139 | STORM PUMP STATION – LOADING DIAGRAM |

## DRAWING, SECTION AND DETAIL TITLES

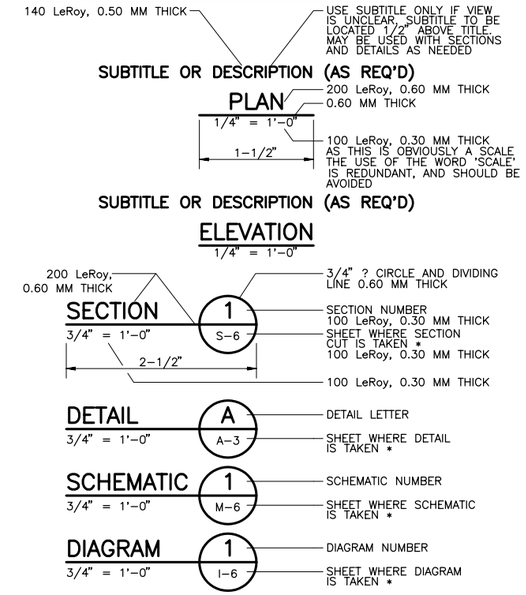


* IF SECTION, DETAIL, SCHEMATIC OR DIAGRAM IS DRAWN ON THE SAME SHEET THE SECTION IS REFERENCED ON MULTIPLE SHEETS, THE SHEET NUMBER THAT IT IS TAKEN FROM, REPLACE THE SHEET NUMBER WITH A HYPHEN. IF SHOWN SHOULD INDICATE THE FIRST SHEET THE SECTION IS TAKEN FROM.

## SECTION CUT SYMBOLS

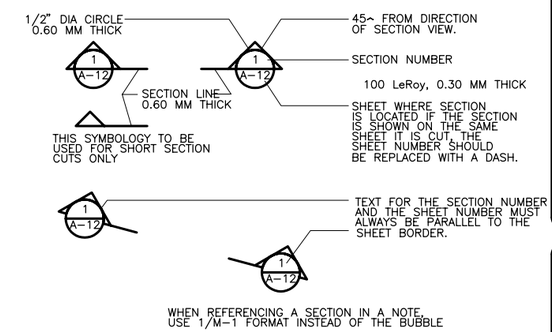


## DETAIL CALL OUT SYMBOLS

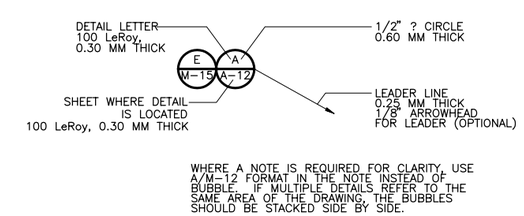


**NOT FOR CONSTRUCTION**

THIS DOCUMENT IS RELEASED FOR THE PURPOSE OF INTERIM REVIEW UNDER THE AUTHORITY OF DONALD R FUNDERLIC TEXAS NO: 61169 ON DATE: 01/13/2005 IT IS NOT TO BE USED FOR CONSTRUCTION, BIDDING OR PERMIT PURPOSES.

US Army Corps of Engineers
Fort Worth District

| Symbol | Description | D.O. NO. | Action | Date |
|---|---|---|---|---|

DESIGN FILE: DRAWING NAME

Designed by: D. FUNDERLIC
Date: JANUARY 2005
Dwn by: J. PRANGE
Sol No. XXXXXX
Reviewed by: M. OLESON
Contr No. XXXXXX
Submitted by:
File name: XXXXX
Plot date: XXXXX
Plot scale: XXXXXX
NAME
TITLE

TARRANT REGIONAL WATER DISTRICT

CDM

FORT WORTH CENTRAL CITY PRELIMINARY DESIGN

DRAWING INDEX AND LEGEND

SEQUENCE NO.
GI-1



Contr No.

REFERENCE FILE: xx
REFERENCE FILE: xx
REFERENCE FILE: xx

VICINITY MAP
N.T.S.

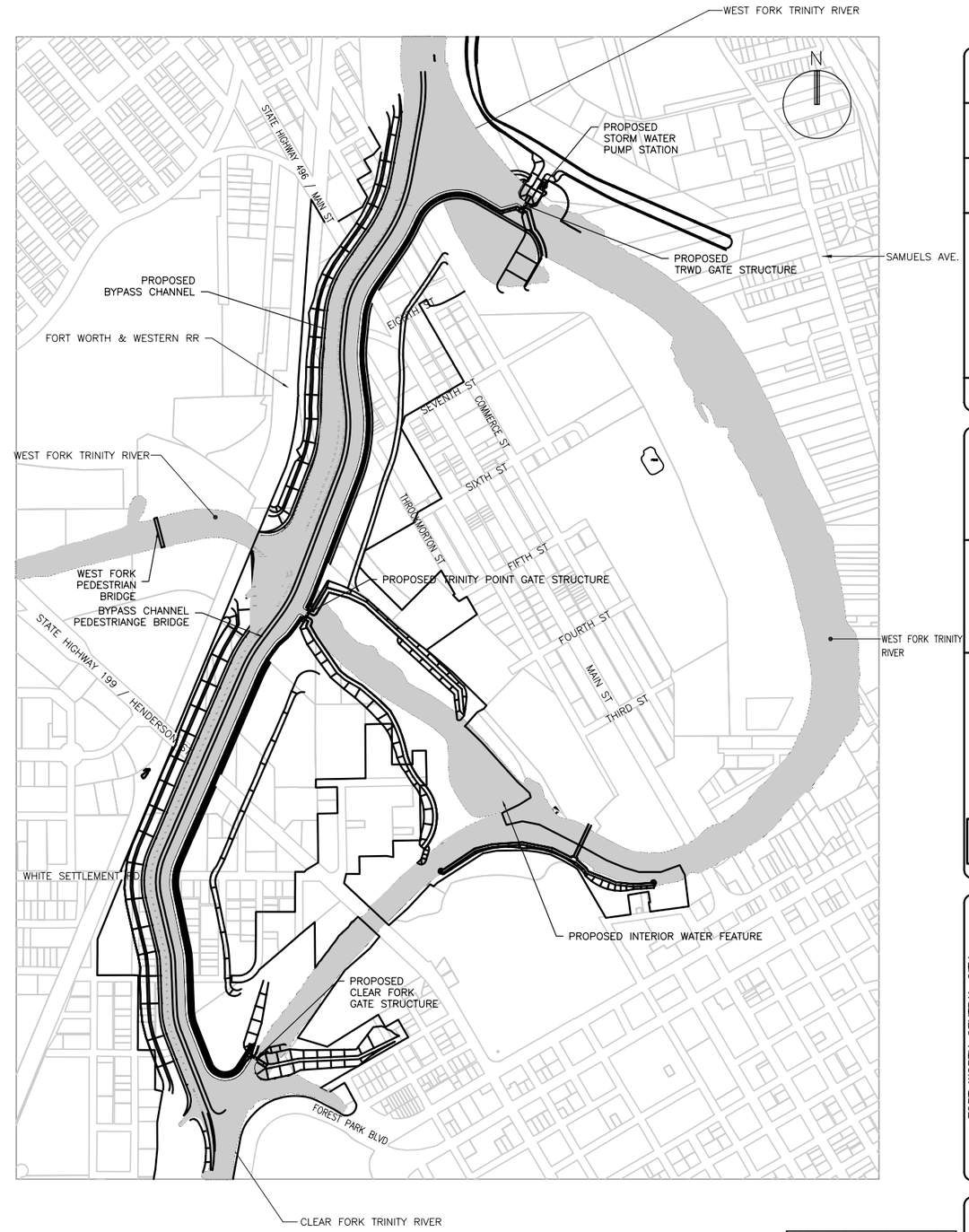


BYPASS CHANNEL LOCATION MAP
N.T.S.

US Army Corps of Engineers
Fort Worth District

| Symbol | Description | P.O. NO. | By | Action | By | Date |
|---|---|---|---|---|---|---|

Date: JANUARY 2005
Sol No. XXXXXX
Contr No. XXXXXX
File name: XXXXX
Plot date: XXXXXX
Plot scale: XXXXXX

Designed by: Name
Dwn by: Name
Reviewed by: Name
Submitted by: NAME TITLE

TARRANT REGIONAL WATER DISTRICT

CDM

FORT WORTH CENTRAL CITY PRELIMINARY DESIGN

**PROJECT VICINITY AND BYPASS CHANNEL LOCATION MAP**

SEQUENCE NO.
GI–2
Sheet 3 of 139

**NOT FOR CONSTRUCTION**
THIS DOCUMENT IS RELEASED FOR THE PURPOSE OF INTERIM REVIEW UNDER THE AUTHORITY OF DONALD R FUNDERLIC TEXAS NO: 61169 ON DATE: 01/13/2005 IT IS NOT TO BE USED FOR CONSTRUCTION, BIDDING OR PERMIT PURPOSES.

DESIGN FILE: DRAWING NAME

Contr No.

REFERENCE FILE: XX
REFERENCE FILE: XX
REFERENCE FILE: XX

## CONTROL POINTS

| | GRID COORDINATES | | | SURFACE COORDINATES | | | |
|---|---|---|---|---|---|---|---|
| PT. NO. | NORTHING | EASTING | SCALE FACTOR | NORTHING | EASTING | ELEV. | DESC. |
| 1 | 6958307.811 | 2322736.131 | 0.999862461 | 6959264.981 | 2323055.642 | 553.766 | SIR58 |
| 2 | 6959967.253 | 2323229.688 | 0.999862461 | 6960924.652 | 2323549.267 | 552.290 | SIR58 |
| 3 | 6960793.148 | 2324191.664 | 0.999862461 | 6961750.660 | 2324511.375 | 552.143 | SIR58 |
| 4 | 6962004.607 | 2322948.642 | 0.999862461 | 6962962.286 | 2323268.182 | 541.865 | SPK |
| 5 | 6962690.986 | 2323760.503 | 0.999862461 | 6963648.759 | 2324080.155 | 558.160 | SIR58 |
| 6 | 6963279.995 | 2324049.839 | 0.999862461 | 6964237.849 | 2324369.530 | 554.245 | SIR58 |
| 7 | 6963869.499 | 2325180.117 | 0.999862461 | 6964827.434 | 2325499.964 | 533.281 | SX |
| 8 | 6965101.596 | 2324570.294 | 0.999862461 | 6966059.701 | 2324890.057 | 531.620 | SX |
| 9 | 6965276.872 | 2325166.841 | 0.999862461 | 6966235.001 | 2325486.686 | 542.982 | SIR58 |
| 10 | 6967092.158 | 2325090.134 | 0.999862461 | 6968050.537 | 2325409.969 | 539.724 | SIR58 |
| 11 | 6966634.841 | 2325214.240 | 0.999862461 | 6967593.157 | 2325534.092 | 547.271 | SPK |
| 12 | 6965609.763 | 2324172.948 | 0.999862461 | 6966567.937 | 2324492.656 | 533.605 | SPK |
| 13 | 6961586.520 | 2323458.904 | 0.999862461 | 6962544.141 | 2323778.514 | 535.160 | SPK |
| 14 | 6961038.023 | 2323898.239 | 0.999862461 | 6961995.569 | 2324217.909 | 542.760 | SPK |
| 15 | 6961040.945 | 2323414.960 | 0.999862461 | 6961998.491 | 2323734.564 | 537.100 | SPK |
| 16 | 6960961.897 | 2322635.045 | 0.999862461 | 6961919.433 | 2322954.542 | 538.480 | SIR58 |
| 17 | 6961035.279 | 2322977.223 | 0.999862461 | 6961992.825 | 2323296.767 | 534.690 | SPK |
| 18 | 6963639.645 | 2324691.647 | 0.999862461 | 6964597.549 | 2325011.427 | 531.530 | SIR58 |
| 19 | 6967788.211 | 2325061.360 | 0.999862461 | 6968746.686 | 2325381.191 | 529.530 | S60D |
| 20 | 6969331.005 | 2325415.484 | 0.999862461 | 6970289.692 | 2325735.363 | 528.230 | SIR58 |
| 21 | 6969592.096 | 2326819.640 | 0.999862461 | 6970550.819 | 2327139.712 | 522.870 | SIR58 |
| 22 | 6968165.613 | 2323831.104 | 0.999862461 | 6969124.139 | 2324150.765 | 521.700 | SIR58 |
| 23 | 6968186.726 | 2323676.182 | 0.999862461 | 6969145.255 | 2323995.822 | 531.360 | SIR58 |
| 24 | 6968117.968 | 2324002.139 | 0.999862461 | 6969076.488 | 2324321.824 | 527.820 | SIR58 |
| 25 | 6968392.771 | 2323030.349 | 0.999862461 | 6969351.329 | 2323349.900 | 533.157 | SIR58 |
| 26 | 6968512.725 | 2322754.919 | 0.999862461 | 6969471.299 | 2323074.432 | 531.647 | SIR58 |
| 27 | 6968987.125 | 2322650.460 | 0.999862461 | 6969945.764 | 2322969.959 | 533.961 | SX |
| 28 | 6969086.105 | 2322437.396 | 0.999862461 | 6970044.758 | 2322756.866 | 532.790 | SIR58 |
| 29 | 6969179.508 | 2322158.467 | 0.999862461 | 6970138.174 | 2322477.898 | 535.600 | SIR58 |
| 30 | 6969369.332 | 2321813.887 | 0.999862461 | 6970328.024 | 2322133.271 | 535.990 | SIR58 |
| 31 | 6968118.864 | 2324684.284 | 0.999862461 | 6969077.384 | 2325004.063 | 527.810 | SIR58 |

TEXAS STATE PLANE COORDINATES
HORIZ. DATUM–TEXAS NORTH CENTRAL ZONE (US FEET)
VERTICAL DATUM – FT. WORTH CITY DATUM (US FEET)
SCALE FACTOR USED TO CALCULATE SURFACE COORDINATES =0.999862461

## SOIL BORINGS / MONITOR WELLS

| | GRID COORDINATES | | | SURFACE COORDINATES | | ELEVATION | | |
|---|---|---|---|---|---|---|---|---|
| WELL NO. | NORTHING | EASTING | SCALE FACTOR | NORTHING | EASTING | COVER | PIPE | NG |
| B–1 | 6965689.975 | 2324273.374 | 1.000137558 | 6966648.161 | 2324593.097 | 532.95 | 532.773 | 532.871* |
| B–2 | 6965111.212 | 2324605.387 | 1.000137558 | 6966069.319 | 2324925.155 | 530.794 | 530.631 | 530.723* |
| C–1 | 6967365.392 | 2325042.840 | 1.000137558 | 6968323.809 | 2325362.668 | 531.967 | 531.692 | 531.881 |
| C–4 | 6964060.592 | 2324508.347 | 1.000137558 | 6965018.555 | 2324828.102 | 532.072 | 531.720 | 532.186* |
| C–7 | 6962452.334 | 2323447.931 | 1.000137558 | 6963410.075 | 2323767.540 | 534.692 | 534.328 | 534.508 |
| C–8 | 6960885.254 | 2322996.935 | 1.000137558 | 6961842.779 | 2323316.481 | 535.994 | 535.745 | 535.907 |
| C–9 | 6959702.312 | 2322927.901 | 1.000137558 | 6960659.675 | 2323247.439 | 537.965 | 537.663 | 537.962 |
| C–10 | 6958513.000 | 2323096.517 | 1.000137558 | 6959470.199 | 2323416.077 | 531.516** | 531.274 | 531.036 |
| D–1 | 6970018.456 | 2326801.265 | 1.000137558 | 6970977.238 | 2327121.335 | 523.174 | 522.953 | 523.230 |
| D–2 | 6970465.348 | 2326766.689 | 1.000137558 | 6971424.192 | 2327086.754 | 528.207 | 527.993 | 527.924 |
| F–1 | 6965895.852 | 2325899.050 | 1.000137558 | 6966854.066 | 2326218.996 | 526.963 | 526.759 | 526.844 |
| F–2 | 6962863.119 | 2324184.529 | 1.000137558 | 6963820.916 | 2324504.239 | 525.758 | 525.374 | 525.839 |
| F–3 | 6959783.283 | 2323571.776 | 1.000137558 | 6960740.656 | 2323891.402 | 531.426 | 531.133 | 531.060 |

* INDICATES ELEVATION SHOT ON TOP OF CONCRETE
** INDICATES ELEVATION SHOT ON RIM OF MONITOR WELL BECAUSE COVER WAS BROKEN
COORDINATES ARE TEXAS NORTH CENTRAL NAD 83 (ZONE 4202)
ELEVATIONS ARE BASED ON THE CITY OF FORT WORTH BENCHMARK NETWORK

## BYPASS CHANNEL PROJECT ALIGNMENT TABLE

| | PC | PI | PT | DELTA | RADIUS (FT) | LENGTH (FT) | TANGENT (FT) | DEGREE OF CURVATURE (ARC) |
|---|---|---|---|---|---|---|---|---|
| POB | | 0+00<br>6966919.80<br>2324773.8 | | | | | | |
| C1 | 0+51.02<br>6966868.85<br>2324776.46 | 1+88.27<br>6966731.79<br>2324783.61 | 3+24.33<br>6966596.66<br>2324759.64 | 13°02'58" RIGHT | 1200 | 273.3 | 137.25 | 4°46'29" |
| C2 | 7+73.86<br>6966154.04<br>2324681.10 | 10+36.05<br>6965895.87<br>2324635.30 | 12+90.14<br>6965680.34<br>2324485.99 | 24°39'02" RIGHT | 1200 | 516.28 | 262.2 | 4°46'29" |
| C3 | 15+95.28<br>6965429.50<br>2324312.23 | 17+64.88<br>6965290.09<br>2324215.65 | 19+27.08<br>6965121.26<br>2324199.50 | 29°14'49" LEFT | 650 | 331.8 | 169.6 | 8°48'53" |
| C4 | 20+90.96<br>6964958.12<br>2324183.90 | 22+24.20<br>6964825.49<br>2324171.21 | 23+56.35<br>6964693.30<br>2324187.92 | 12°40'18" LEFT | 1200 | 265.39 | 133.24 | 4°46'29" |
| C5 | 25+91.29<br>6964460.23<br>2324217.4 | 28+40.90<br>6964212.59<br>2324248.71 | 30+80.51<br>6963979.28<br>2324159.98 | 28°01'50" RIGHT | 1000 | 489.23 | 249.61 | 5°43'46" |
| C6 | 39+50.66<br>6963165.97<br>2323850.65 | 40+90.76<br>6963035.02<br>2323800.84 | 42+29.06<br>6962922.80<br>2323716.97 | 15°57'03" RIGHT | 1000 | 278.4 | 140.1 | 5°43'46" |
| C7 | 44+77.83<br>6962723.53<br>2323568.04 | 45+96.02<br>6962628.85<br>2323497.28 | 47+13.13<br>6962520.29<br>2323450.54 | 13°28'54" LEFT | 1000 | 235.3 | 118.19 | 5°43'46" |
| C8 | 61+95.76<br>6961158.50<br>2322864.26 | 63+59.11<br>6961008.47<br>2322799.67 | 65+11.52<br>6960849.24<br>2322836.11 | 36°10'58" LEFT | 500 | 315.76 | 163.34 | 11°27'33" |
| C9 | 69+05.95<br>6960464.75<br>2322924.1 | 69+52.94<br>6960418.94<br>2322934.58 | 69+99.66<br>6960371.98<br>2322936.35 | 10°44'18" RIGHT | 500 | 93.71 | 46.99 | 11°27'33" |
| C10 | 73+51.49<br>6960020.40<br>2322949.56 | 74+35.99<br>6959935.96<br>2322952.73 | 75+18.92<br>6959857.24<br>2322983.48 | 19°11'09" LEFT | 500 | 167.43 | 84.51 | 11°27'33" |
| POE | | 84+21.21<br>6959016.80<br>2323311.79 | | | | | | |

BASED ON INROADS ALIGNMENT REPORT MODIFIED ON 11/11/04

## LOWER BYPASS LEVEE ALIGNMENT TABLE

| | PC | PI | PT | DELTA | RADIUS (FT) | LENGTH (FT) | TANGENT (FT) | DEGREE OF CURVATURE (ARC) |
|---|---|---|---|---|---|---|---|---|
| POB | | 0+00<br>6963663.87<br>2323642.38 | | | | | | |
| C1 | 0+00<br>6963663.87<br>2323642.38 | 0+80.93<br>6963636.66<br>2323718.60 | 1+27.47<br>6963712.67<br>2323746.39 | 89°34'14" LEFT | 81.54 | 127.47 | 80.93 | 70°15'57" |
| C2 | 4+95.64<br>6964054.67<br>2323881.33 | 5+67.07<br>6964121.12<br>2323907.54 | 6+38.07<br>6964191.32<br>2323920.75 | 10°52'51" LEFT | 750 | 142.43 | 71.43 | 7°38'22" |
| C3 | 7+20.94<br>6964272.76<br>2323936.06 | 7+48.70<br>6964300.04<br>2323941.19 | 7+76.40<br>6964327.72<br>2323943.27 | 6°21'15" LEFT | 500 | 55.45 | 27.75 | 11°27'33" |
| C4 | 8+01.69<br>6964352.94<br>2323945.17 | 8+30.44<br>6964381.61<br>2323947.32 | 8+59.14<br>6964410.35<br>2323946.18 | 6°35'00" LEFT | 500 | 57.45 | 28.76 | 11°27'33" |
| C5 | 8+90.80<br>6964441.99<br>2323944.91 | 8+95.88<br>6964447.06<br>2323944.71 | 9+00.94<br>6964452.12<br>2323945.02 | 5°48'25" RIGHT | 100 | 10.14 | 5.07 | 57°17'45" |
| C6 | 10+93.86<br>6964644.67<br>2323956.87 | 11+08.32<br>6964659.10<br>2323957.75 | 11+22.76<br>6964673.56<br>2323957.81 | 3°18'43" LEFT | 500 | 28.90 | 14.46 | 11°27'33" |
| C7 | 11+44.23<br>6964695.03<br>2323957.89 | 12+42.40<br>6964793.20<br>2323958.24 | 13+40.42<br>6964890.86<br>2323968.21 | 5°37'13" RIGHT | 2000 | 196.18 | 98.17 | 2°51'53" |
| C8 | 15+79.65<br>6965128.86<br>2323992.51 | 18+14.29<br>6965362.29<br>2324016.34 | 20+38.72<br>6965554.37<br>2324151.10 | 29°13'31" RIGHT | 900 | 459.07 | 234.64 | 6°21'58" |
| C9 | 23+22.20<br>6965786.43<br>2324313.92 | 25+44.29<br>6965968.24<br>2324441.48 | 27+59.29<br>6966186.95<br>2324480.09 | 25°02'37" LEFT | 1000 | 437.09 | 222.09 | 5°43'46" |
| C10 | 31+74.59<br>6966595.92<br>2324552.28 | 32+07.10<br>6966627.94<br>2324557.93 | 32+38.62<br>6966659.42<br>2324549.82 | 24°27'28" LEFT | 150 | 64.03 | 32.51 | 38°11'50" |
| POE | | 32+48.90<br>6966669.38<br>2324547.25 | | | | | | |

BASED ON INROADS ALIGNMENT REPORT MODIFIED ON 1/19/05

## UPPER BYPASS LEVEE ALIGNMENT TABLE

| | PC | PI | PT | DELTA | RADIUS (FT) | LENGTH (FT) | TANGENT (FT) | DEGREE OF CURVATURE (ARC) |
|---|---|---|---|---|---|---|---|---|
| POB | | 0+00<br>6959462.15<br>2322929.83 | | | | | | |
| C1 | 3+46.13<br>6959785.59<br>2322806.58 | 4+70.66<br>6959901.96<br>2322762.23 | 5+92.95<br>6960026.42<br>2322757.88 | 18°51'20" RIGHT | 750 | 246.82 | 124.53 | 7°38'22" |
| C2 | 8+87.50<br>6960320.80<br>2322747.58 | 9+63.03<br>6960396.28<br>2322744.94 | 10+38.06<br>6960469.72<br>2322727.30 | 11°30'05" LEFT | 750 | 150.55 | 75.53 | 7°38'22" |
| C3 | 13+55.73<br>6960778.61<br>2322653.11 | 16+04.21<br>6961020.22<br>2322595.08 | 18+35.62<br>6961248.69<br>2322692.79 | 36°39'40" RIGHT | 750 | 479.89 | 248.48 | 7°38'22" |
| C4 | 32+96.28<br>6962591.68<br>2323267.17 | 33+59.30<br>6962649.62<br>2323291.95 | 34+22.16<br>6962704.00<br>2323323.80 | 7°12'43" RIGHT | 1000 | 125.87 | 63.02 | 5°43'46" |
| C5 | 35+83.40<br>6962843.12<br>2323405.32 | 35+98.92<br>6962856.51<br>2323413.16 | 36+13.49<br>6962871.98<br>2323412.05 | 34°28'28" LEFT | 50 | 30.08 | 15.51 | 114°35'30" |
| POE | | 37+33.39<br>6962991.57<br>2323403.47 | | | | | | |

BASED ON INROADS ALIGNMENT REPORT MODIFIED ON 1/19/05

REFERENCE FILE: xx
REFERENCE FILE: xx
REFERENCE FILE: xx

**NOT FOR CONSTRUCTION**

THIS DOCUMENT IS RELEASED FOR THE PURPOSE OF INTERIM REVIEW UNDER THE AUTHORITY OF DONALD R FUNDERLIC TEXAS NO: 61169 ON DATE: 01/13/2005 IT IS NOT TO BE USED FOR CONSTRUCTION, BIDDING OR PERMIT PURPOSES.

US Army Corps of Engineers
Fort Worth District

| Symbol | Description | I.D. NO. | Action | Date |
|---|---|---|---|---|

DESIGN FILE: 2521-TRINITY\42275\DWG\2521G-LB-G006.DWG

Designed by: Name
Dwn by: Name
Reviewed by: Name
Submitted by: NAME TITLE
Date: JANUARY 2005
Sol No. XXXXXX
Contr No. XXXXXX
File name: XXXXX
Plot date: XXXXXX
Plot scale: XXXXXX

TARRANT REGIONAL WATER DISTRICT
CDM

FORT WORTH CENTRAL CITY PRELIMINARY DESIGN

**BYPASS CHANNEL ALIGNMENT AND CONTROL TABLES**

SEQUENCE NO.
GR–1
Sheet 4 of 139

Contr No.

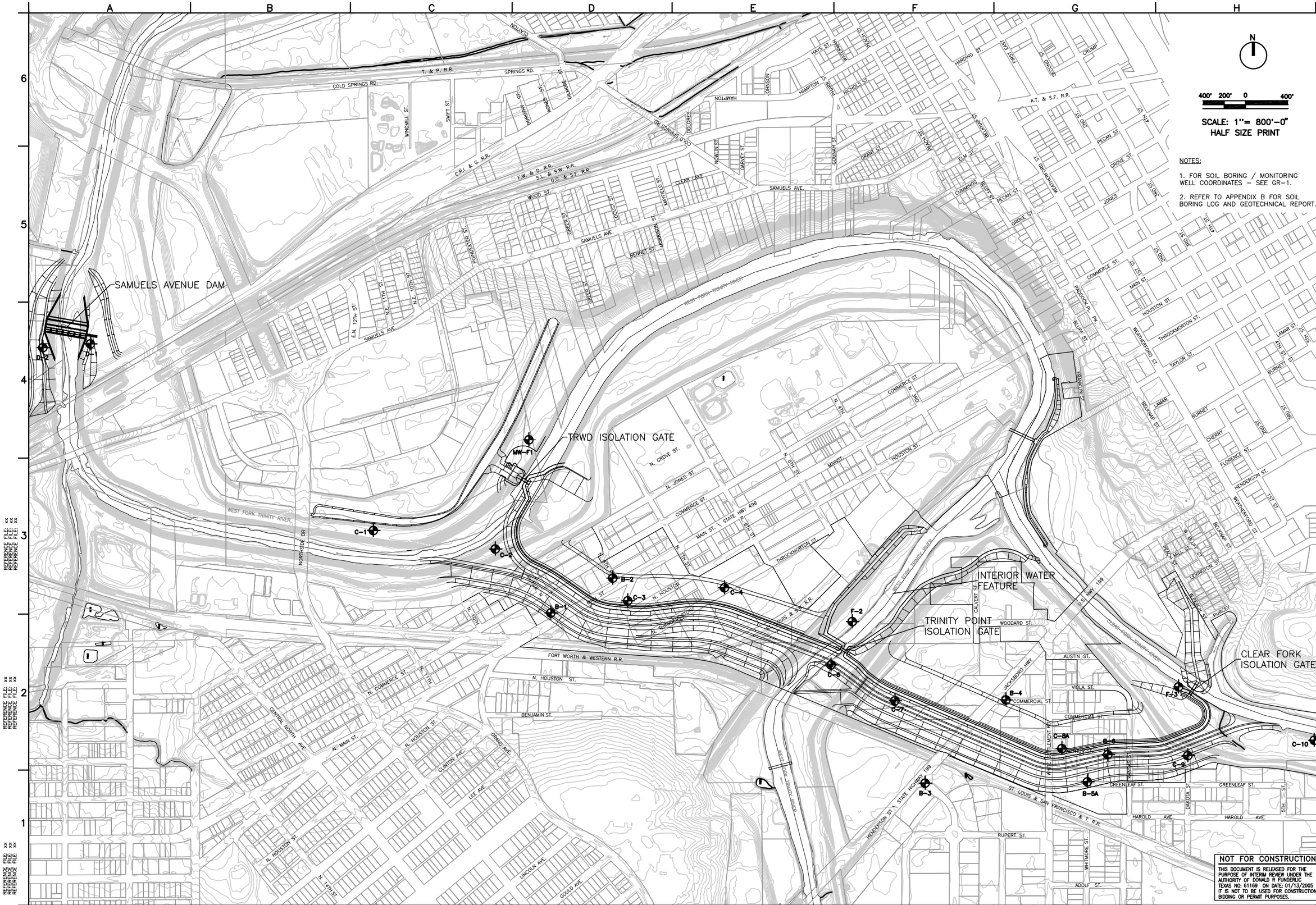
SAMUELS AVENUE DAM
TRWD ISOLATION GATE
INTERIOR WATER FEATURE
TRINITY POINT ISOLATION GATE
CLEAR FORK ISOLATION GATE
WEST FORK TRINITY RIVER
CLEAR FORK TRINITY RIVER
T. & P. R.R.
COLD SPRINGS RD.
SPRINGS RD.
C.R.I. & G. R.R.
F.W. & D. R.R.
S.L. & S.W. R.R.
G.C. & S.F. R.R.
A.T. & S.F. R.R.
FORT WORTH & WESTERN R.R.
ST. LOUIS & SAN FRANCISCO & T. R.R.
SAMUELS AVE.
N. HOUSTON ST.
COMMERCE ST.
MAIN ST. \ STATE HWY 496
THROCKMORTON ST.
HENDERSON ST \ STATE HIGHWAY 199
U.S. HWY. 199
MACKBORD HWY.
WEST SETTLEMENT RD.
GREENLEAF ST.
HAROLD AVE.
RUPERT ST.
ADOLF ST.
AUSTIN ST.
VIOLA ST.
COMMERCIAL ST.
WOODARD ST.
CALVERT ST.
NORTHSIDE DR.
CENTRAL NORTH AVE.
N. MAIN ST.
CLINTON AVE.
GRAND AVE.
LEE AVE.
LINCOLN AVE.
GOULD AVE.
N. 14TH ST.
N. 10TH ST.
N. 7TH ST.
N. 6TH ST.
N. 5TH ST.
N. 4TH ST.
N. 3RD ST.
N. JONES ST.
N. GROVE ST.
BENJAMIN ST.
MAIN ST.
HOUSTON ST.
TAYLOR ST.
BURNETT ST.
LAMAR ST.
CHERRY ST.
FLORENCE ST.
HENDERSON ST.
WEATHERFORD ST.
BELKNAP ST.
LEXINGTON ST.
PURCELL
PEACH HILL ST.
N. BLUFF ST.
W. BLUFF ST.
DAKOTA ST.
5TH ST.
WHITMORE ST.
MAINST.
B-1
B-2
B-3
B-4
B-5
B-5A
B-6
B-8A
B-9
C-1
C-2
C-3
C-4
C-5
C-7
C-10
F-2
F-3
MW-F1
D-1
D-2
N
400' 200' 0 400'
SCALE: 1"= 800'-0"
HALF SIZE PRINT
NOTES:
1. FOR SOIL BORING / MONITORING WELL COORDINATES – SEE GR-1.
2. REFER TO APPENDIX B FOR SOIL BORING LOG AND GEOTECHNICAL REPORT.
US Army Corps of Engineers
Fort Worth District
Symbol
Description
W.O. NO.
Action
Date
Date: JANUARY 2005
Sol No. XXXXXX
Contr No. XXXXXX
File name: XXXXX
Plot date: XXXXX
Plot scale: XXXXXX
Designed by: D. FUNDERLIC
Dwn by: J. PRANGE
Reviewed by: M. OLESON
Submitted by: NAME TITLE
TARRANT REGIONAL WATER DISTRICT
CDM
FORT WORTH CENTRAL CITY PRELIMINARY DESIGN
BORING LOCATION MAP
SEQUENCE NO.
GR-2
Sheet 5 of 139
NOT FOR CONSTRUCTION
THIS DOCUMENT IS RELEASED FOR THE PURPOSE OF INTERIM REVIEW UNDER THE AUTHORITY OF DONALD R FUNDERLIC TEXAS NO: 61169 ON DATE: 01/13/2005 IT IS NOT TO BE USED FOR CONSTRUCTION, BIDDING OR PERMIT PURPOSES.
DESIGN FILE: 2521-TRINITY 42275\CIVIL\2521C-BL-CT04.DWG
Contr No.
REFERENCE FILE: XX
REFERENCE FILE: XX
REFERENCE FILE: XX

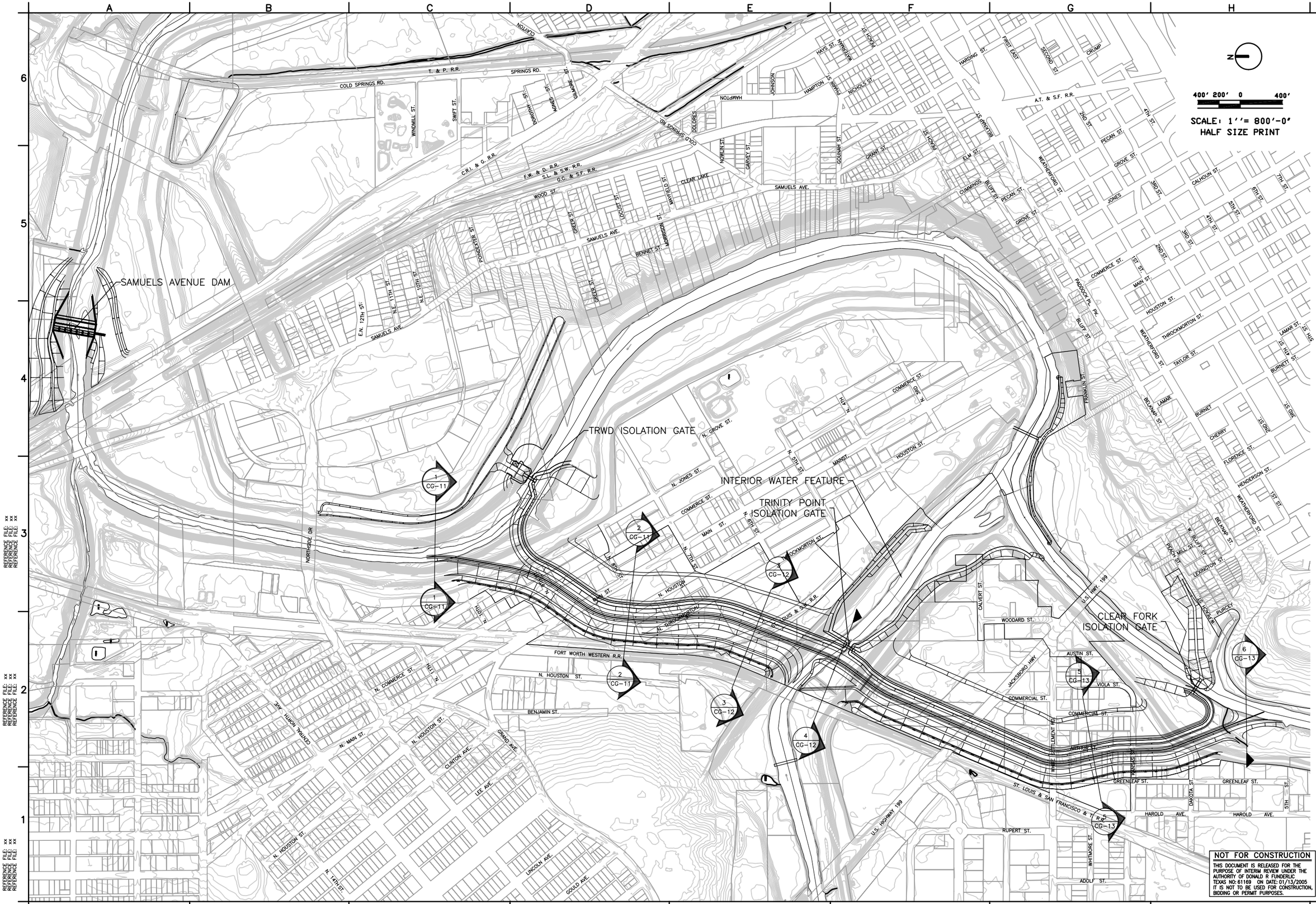


US Army Corps of Engineers
Fort Worth District

| Symbol | Description | D.O. NO. | Action | Date |
|---|---|---|---|---|
| | | xx | xx | xx |

Designed by: D. FUNDERLIC
Dwn by: E. H. CONYERS
Reviewed by: Name
Submitted by: NAME TITLE
Date: JANUARY 2005
Sol No. XXXXXX
Contr No. XXXXXX
File name: XXXXX
Plot date: XXXXX
Plot scale: XXXXXX

TARRANT REGIONAL WATER DISTRICT

CDM

FORT WORTH CENTRAL CITY PRELIMINARY DESIGN

**BYPASS CHANNEL SECTION LOCATION MAP**

SEQUENCE NO.
C-1

Sheet 6 of 139

**NOT FOR CONSTRUCTION**

THIS DOCUMENT IS RELEASED FOR THE PURPOSE OF INTERIM REVIEW UNDER THE AUTHORITY OF DONALD R FUNDERLIC TEXAS NO: 61169 ON DATE: 01/13/2005 IT IS NOT TO BE USED FOR CONSTRUCTION, BIDDING OR PERMIT PURPOSES.

DESIGN FILE: 2521C-CP-CT01.DWG

Contr No.

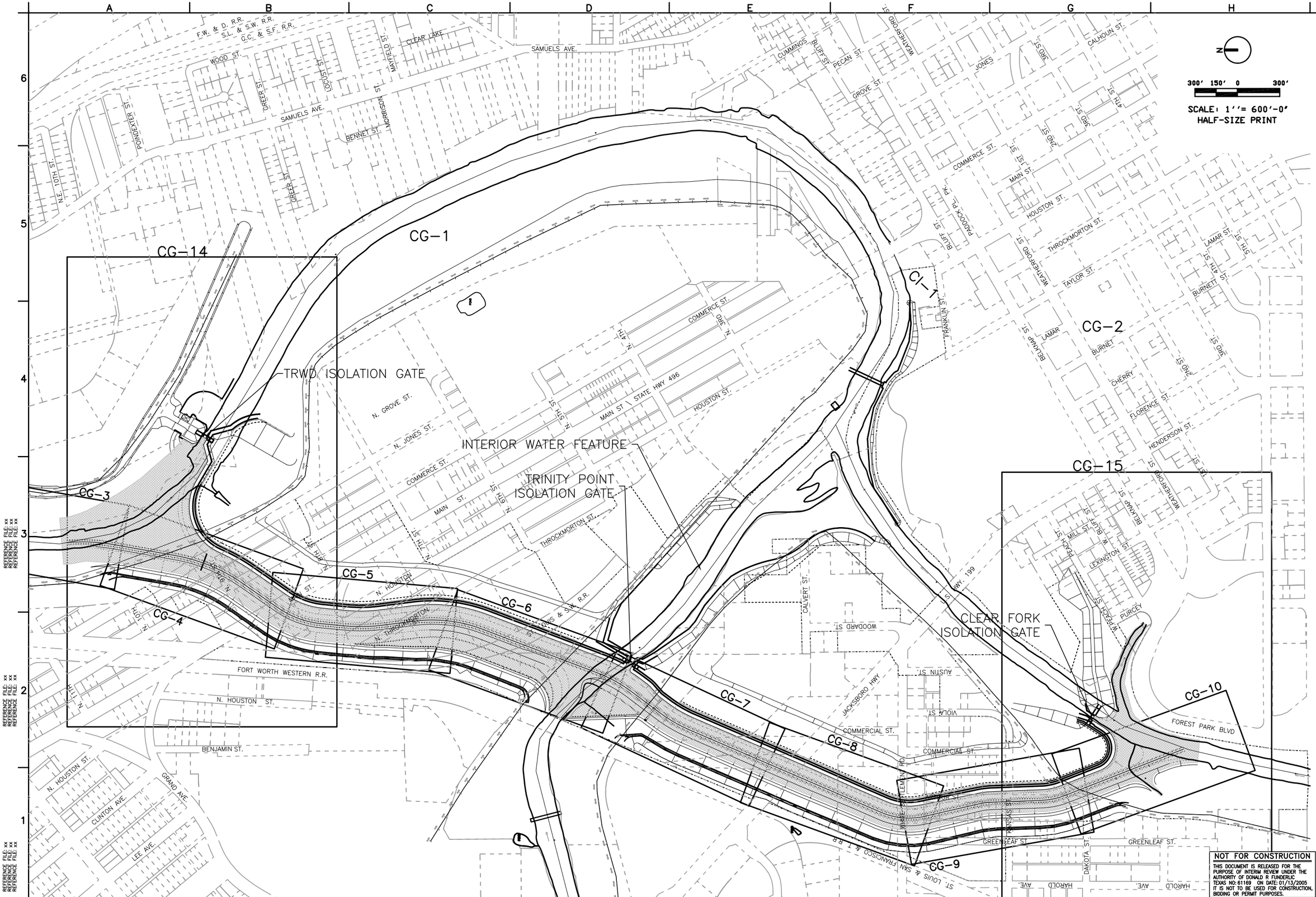


NOT FOR CONSTRUCTION

THIS DOCUMENT IS RELEASED FOR THE PURPOSE OF INTERIM REVIEW UNDER THE AUTHORITY OF DONALD R FUNDERLIC TEXAS NO: 61169 ON DATE: 01/13/2005 IT IS NOT TO BE USED FOR CONSTRUCTION, BIDDING OR PERMIT PURPOSES.

| Symbol | Description | W.O. NO. | By | Action | By | Date |
|---|---|---|---|---|---|---|

TARRANT REGIONAL WATER DISTRICT

CDM

Designed by: D. FUNDERLIC
Dwn by: J. PRANGE
Reviewed by: M. OLESON
Submitted by: NAME TITLE

Date: JANUARY 2005
Sol No. XXXXXX
Contr No. XXXXXX
File name: XXXXX
Plot date: XXXXX
Plot scale: XXXXXX

DESIGN FILE: DRAWING NAME

FORT WORTH CENTRAL CITY PRELIMINARY DESIGN

# BYPASS CHANNEL KEY PLAN

SEQUENCE NO.

C-2

Sheet 7 of 139

Contr No.

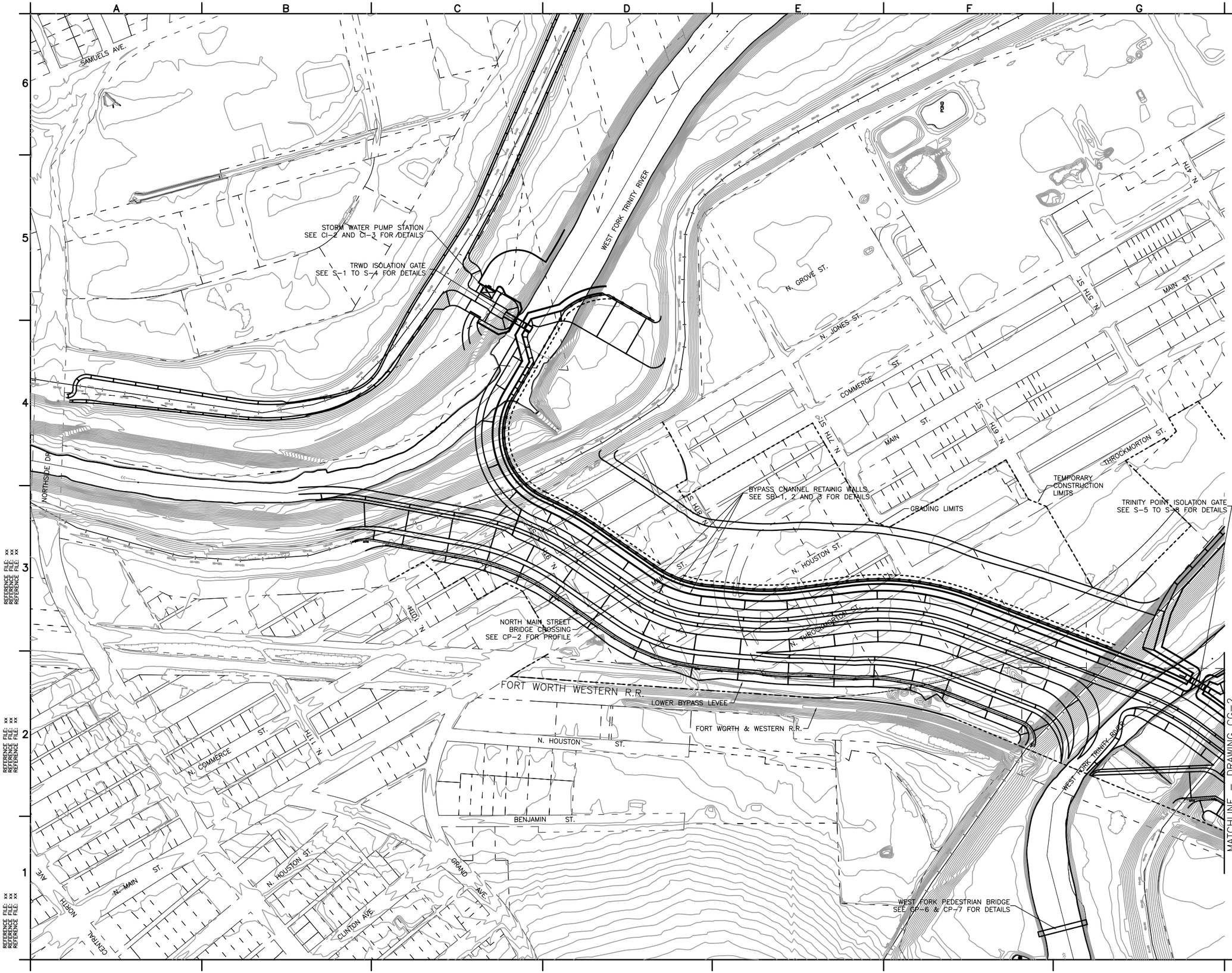


N

200 100 0 200

SCALE: 1"= 400'-0"
HALF-SIZE PRINT

NOTES:

1. BYPASS CHANNEL ALIGNMENT TABLE SEE GR-1
2. BYPASS CHANNEL LEVEE ALIGNMENT TABLES SEE GR-1

US Army Corps of Engineers
Fort Worth District

| Symbol | Description | D.O. NO. | Action | Date |
|---|---|---|---|---|
| | | xx | xx | xx |

TARRANT REGIONAL WATER DISTRICT

CDM

Designed by: D. FUNDERLIC
Dwn by: J. PRANGE
Reviewed by: M. OLESON
Submitted by: NAME TITLE

Date: JANUARY 2005
Sol No. XXXXXX
Contr No. XXXXXX
File name: XXXXX
Plot date: XXXXX
Plot scale: XXXXXX

FORT WORTH CENTRAL CITY
PRELIMINARY DESIGN

**BYPASS CHANNEL GRADING PLAN LOWER BYPASS**

SEQUENCE NO.
CG-1

Sheet 8 of 139

NOT FOR CONSTRUCTION

THIS DOCUMENT IS RELEASED FOR THE PURPOSE OF INTERIM REVIEW UNDER THE AUTHORITY OF DONALD R FUNDERLIC TEXAS NO: 61169 ON DATE: 01/13/2005 IT IS NOT TO BE USED FOR CONSTRUCTION, BIDDING OR PERMIT PURPOSES.

DESIGN FILE: DRAWING NAME

Contr No.

REFERENCE FILE: xx
REFERENCE FILE: xx
REFERENCE FILE: xx

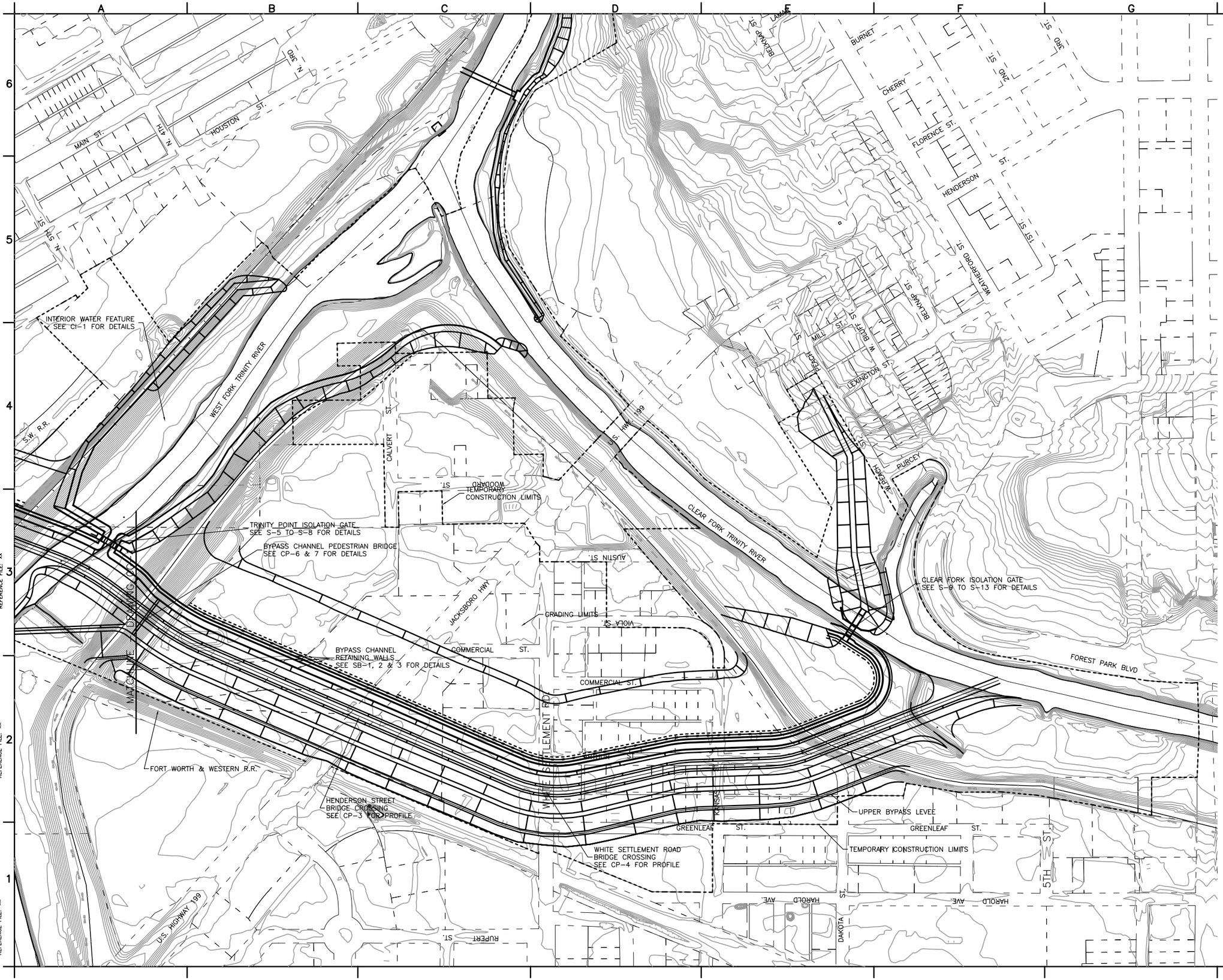


N

200 100 0 200

SCALE: 1"= 400'-0"
HALF-SIZE PRINT

NOTES:

1. BYPASS CHANNEL ALIGNMENT TABLE SEE GR-1
2. BYPASS CHANNEL LEVEE ALIGNMENT TABLES SEE GR-1

US Army Corps of Engineers
Fort Worth District

| Symbol | Description | D.O. NO. | Action | Date |
|---|---|---|---|---|
| | | xx | xx | xx |

TARRANT REGIONAL WATER DISTRICT

CDM

Designed by: D. FUNDERLIC
Dwn by: J. PRANGE
Reviewed by: M. OLESON
Submitted by: NAME TITLE

Date: JANUARY 2005
Sol No. XXXXXX
Contr No. XXXXXX
File name: XXXXX
Plot date: XXXXX
Plot scale: XXXXXX

FORT WORTH CENTRAL CITY
PRELIMINARY DESIGN

**BYPASS CHANNEL GRADING PLAN UPPER BYPASS**

SEQUENCE NO.
CG-2
Sheet 9 of 139

**NOT FOR CONSTRUCTION**

THIS DOCUMENT IS RELEASED FOR THE PURPOSE OF INTERIM REVIEW UNDER THE AUTHORITY OF DONALD R FUNDERLIC TEXAS NO: 61169 ON DATE: 01/13/2005 IT IS NOT TO BE USED FOR CONSTRUCTION, BIDDING OR PERMIT PURPOSES.

DESIGN FILE: DRAWING NAME

Contr No.

REFERENCE FILE: xx
REFERENCE FILE: xx
REFERENCE FILE: xx

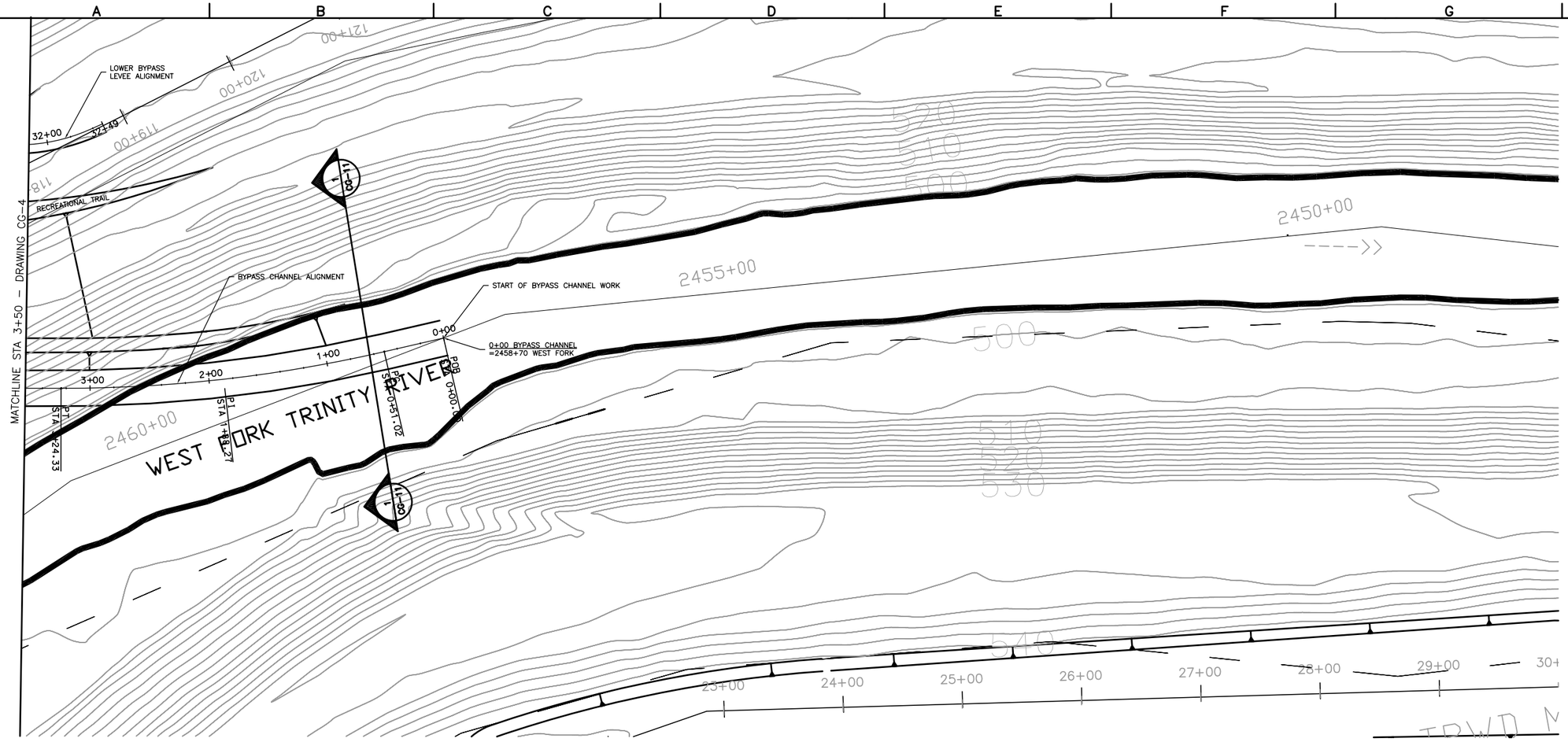


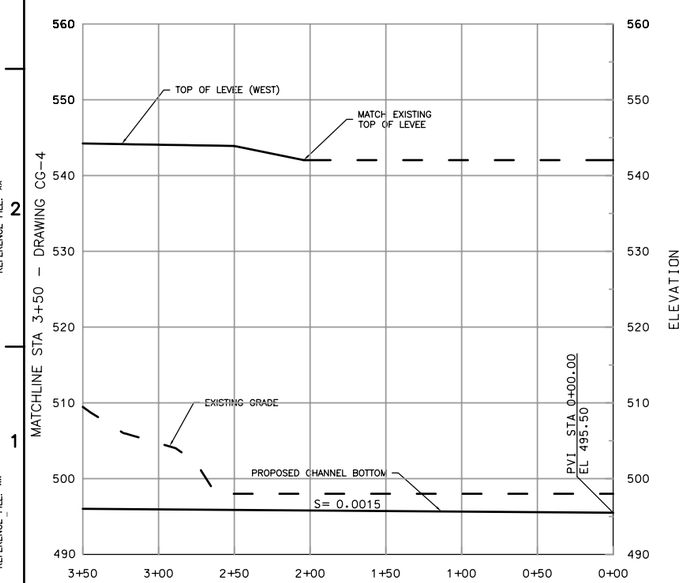


50' 25' 0 50'

SCALE: 1''= 100'-0'
HALF-SIZE PRINT

NOTES:

1. REFER TO C-2 FOR BYPASS CHANNEL KEY PLAN.
2. REFER TO CG-11 FOR TYPICAL CROSS SECTIONS.
3. REFER TO GI-1 FOR LEGEND AND ABBREVIATIONS.
4. REFER TO CU DRAWINGS FOR UTILITY WORK IN THIS AREA. (WORK BY OTHERS)
5. CONTRACTOR SHALL CLEAR AND GRUB TO GRADING LIMITS.
6. REFER TO GR-1 FOR BYPASS CHANNEL ALIGNMENT CONTROL POINTS.

US Army Corps of Engineers
Fort Worth District

| Symbol | Description | D.O. NO. | Action | Date |
|---|---|---|---|---|
| | | xx | xx | xx |

Designed by: D. FUNDERLIC
Dwn by: J. PRANGE
Reviewed by: M. OLESON
Submitted by: NAME TITLE
Date: JANUARY 2005
Sol No. XXXXXX
Contr No. XXXXXX
File name: XXXXX
Plot date: XXXXX
Plot scale: XXXXXX

TARRANT REGIONAL WATER DISTRICT

CDM

FORT WORTH CENTRAL CITY PRELIMINARY DESIGN

**BYPASS CHANNEL PLAN AND PROFILE STA 0+00 TO STA 3+50**

SEQUENCE NO.
CG-3
Sheet 10 of 139

NOT FOR CONSTRUCTION
THIS DOCUMENT IS RELEASED FOR THE PURPOSE OF INTERIM REVIEW UNDER THE AUTHORITY OF DONALD R FUNDERLIC TEXAS NO: 61169 ON DATE: 01/13/2005 IT IS NOT TO BE USED FOR CONSTRUCTION, BIDDING OR PERMIT PURPOSES.

DESIGN FILE: DRAWING NAME

Contr No.

REFERENCE FILE: xx
REFERENCE FILE: xx
REFERENCE FILE: xx

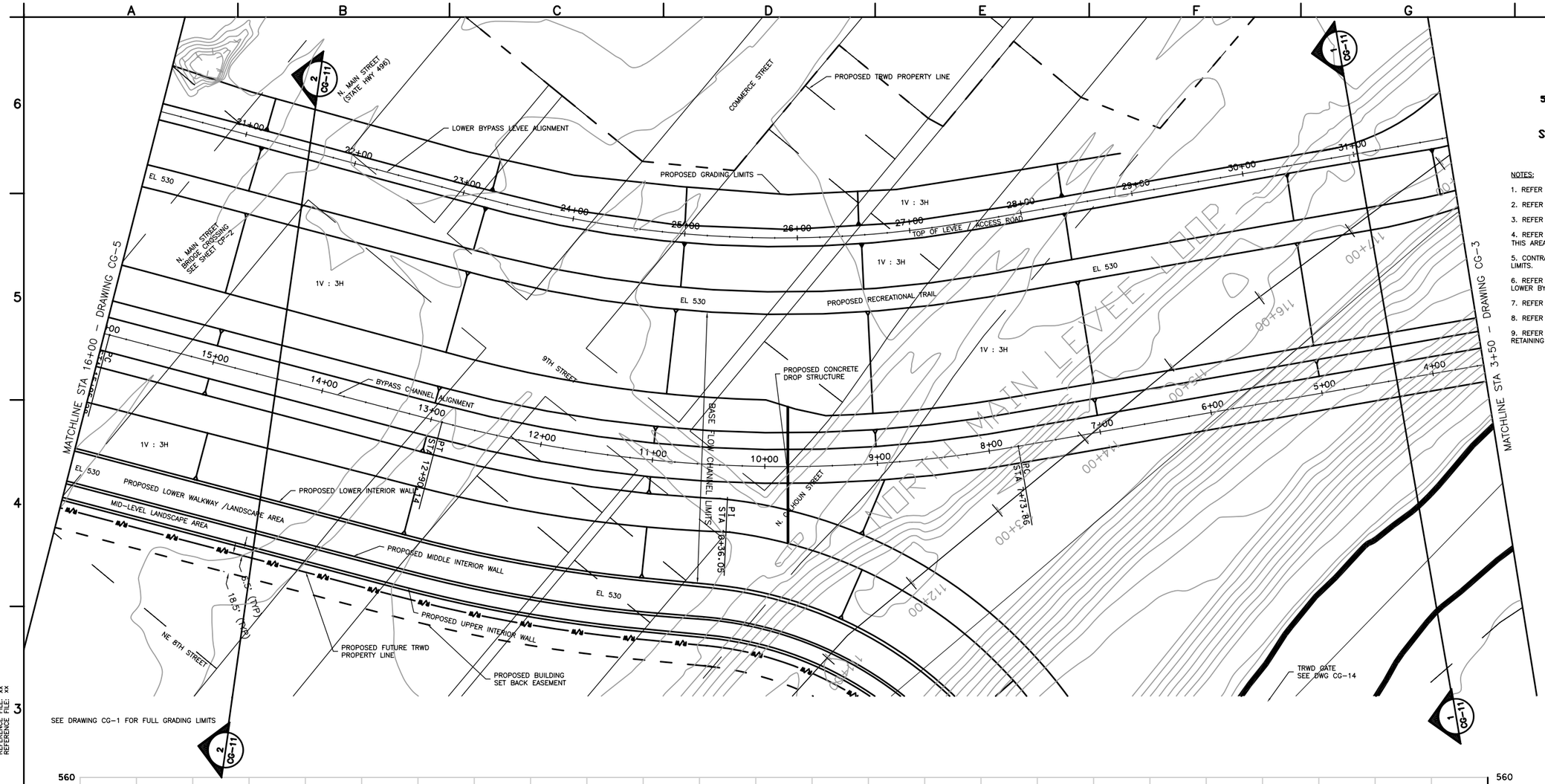


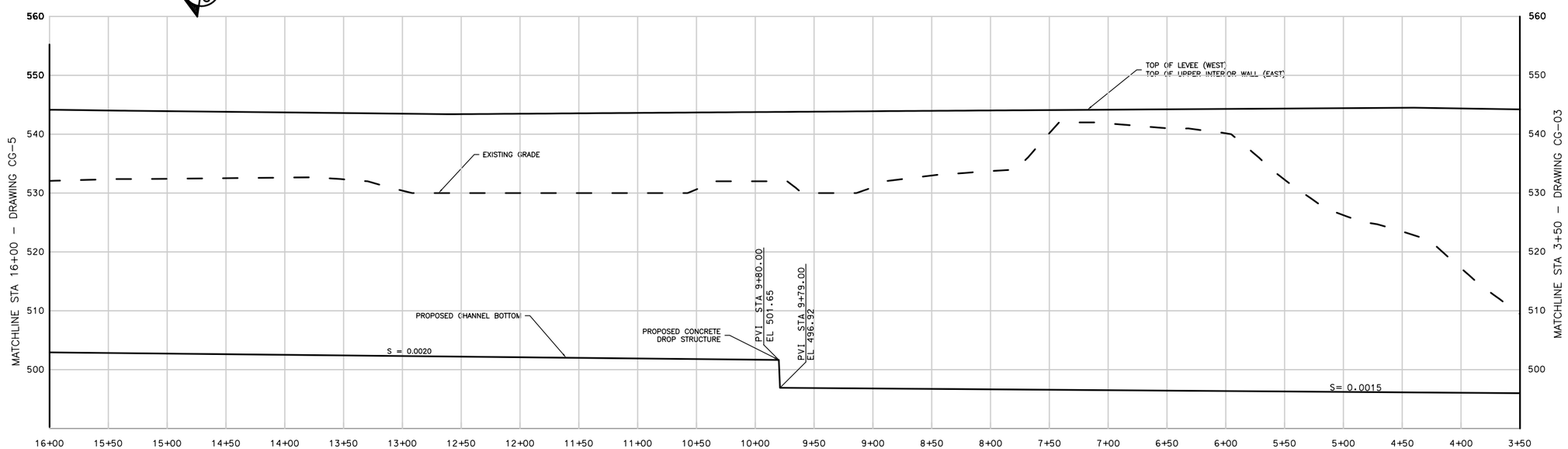


SCALE: 1''= 100'-0"
HALF-SIZE PRINT

NOTES:

1. REFER TO C-2 FOR BYPASS CHANNEL KEY PLAN.
2. REFER TO CG-11 FOR TYPICAL CROSS SECTIONS.
3. REFER TO GI-1 FOR LEGEND AND ABBREVIATIONS.
4. REFER TO CU DRAWINGS FOR UTILITY WORK IN THIS AREA. (WORK BY OTHERS)
5. CONTRACTOR SHALL CLEAR AND GRUB TO GRADING LIMITS.
6. REFER TO GR-1 FOR BYPASS CHANNEL AND LOWER BYPASS LEVEE CONTROL POINTS
7. REFER TO CP-1 FOR TRANSPORTATION SITE PLAN.
8. REFER TO CG-1 FOR FULL GRADING LIMITS.
9. REFER TO SB-1 TO SB-3 FOR INTERIOR RETAINING WALL DETAILS.

US Army Corps of Engineers
Fort Worth District

| Symbol | Description | D.O. NO. | Action | Date |
|---|---|---|---|---|
| | | xx | xx | xx |

TARRANT REGIONAL WATER DISTRICT

CDM

Designed by: D. FUNDERLIC
Dwn by: J. PRANGE
Reviewed by: M. OLESON
Submitted by: NAME TITLE
Date: JANUARY 2005
Sol No. XXXXXX
Contr No. XXXXXX
File name: XXXXX
Plot date: XXXXX
Plot scale: XXXXXX

FORT WORTH CENTRAL CITY
PRELIMINARY DESIGN

**BYPASS CHANNEL PLAN AND PROFILE STA 3+50 TO STA 16+00**

SEQUENCE NO.
CG-4

Sheet 11 of 139

NOT FOR CONSTRUCTION
THIS DOCUMENT IS RELEASED FOR THE PURPOSE OF INTERIM REVIEW UNDER THE AUTHORITY OF DONALD R FUNDERLIC TEXAS NO: 61169 ON DATE: 01/13/2005 IT IS NOT TO BE USED FOR CONSTRUCTION, BIDDING OR PERMIT PURPOSES.

DESIGN FILE: DRAWING NAME

Contr No.

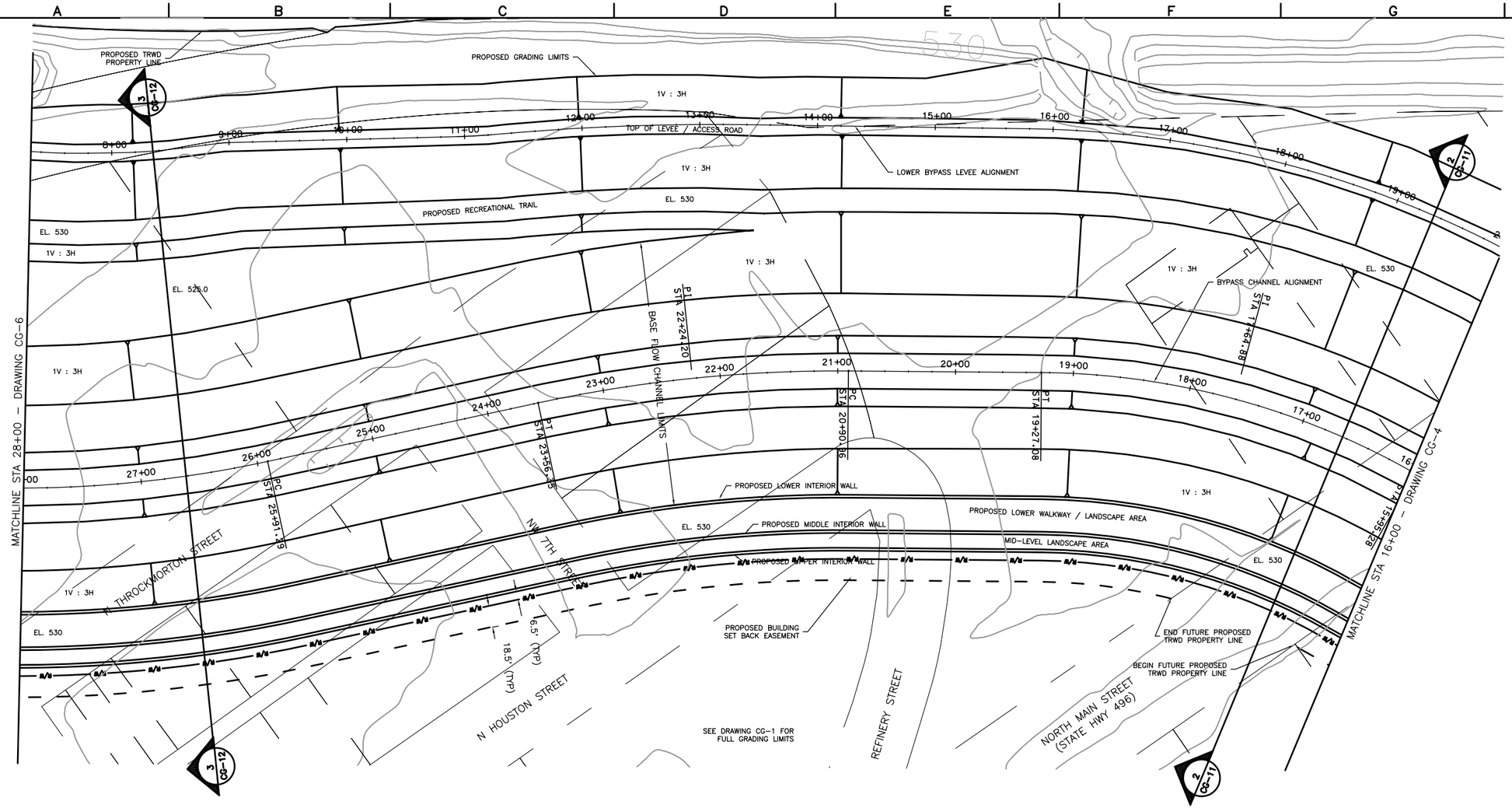


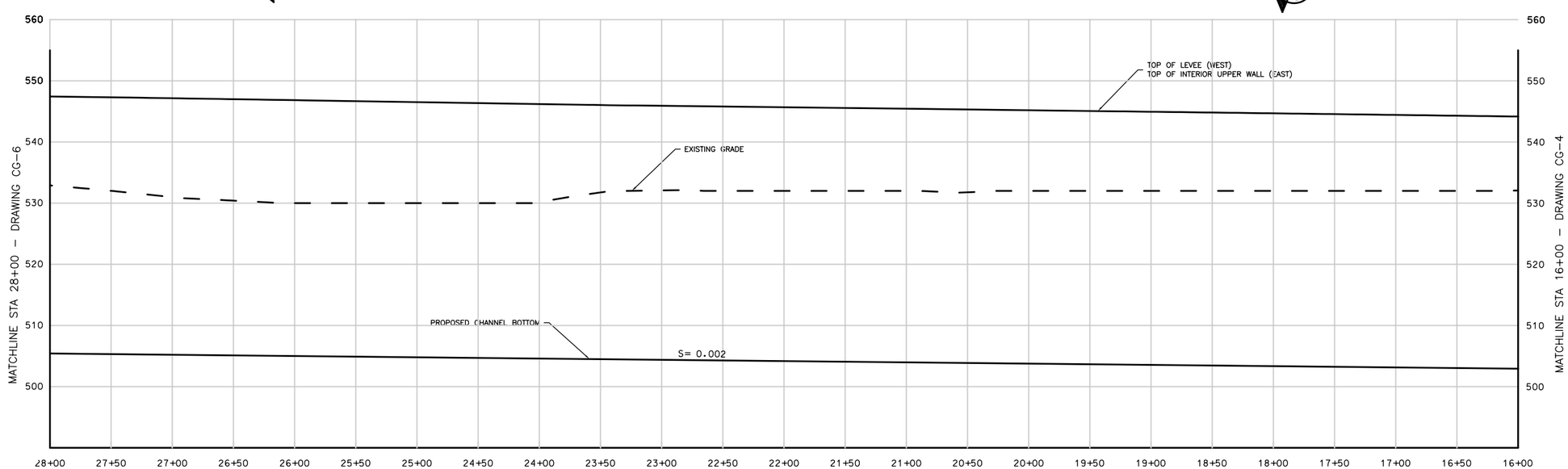


50' 25' 0 50'

SCALE: 1''= 100'-0'
HALF-SIZE PRINT

NOTES:

1. REFER TO C-2 FOR BYPASS CHANNEL KEY PLAN.
2. REFER TO CG-11 & CG-12 FOR TYPICAL SECTIONS.
3. REFER TO GI-1 FOR LEGEND AND ABBREVIATIONS.
4. REFER TO CU DRAWINGS FOR UTILITY WORK IN THIS AREA. (WORK BY OTHERS)
5. CONTRACTOR SHALL CLEAR AND GRUB TO GRADING LIMITS.
6. REFER TO GR-1 FOR BYPASS CHANNEL, & LOWER BYPASS LEVEE ALIGNMENT CONTROL POINTS.
7. REFER TO CP-1 FOR TRANSPORTATION SITE PLAN.
8. REFER TO CG-1 FOR FULL GRADING LIMITS.
9. REFER TO SB-1 TO SB-3 FOR INTERIOR RETATINING WALL DETAILS.

US Army Corps of Engineers
Fort Worth District

| Symbol | Description | D.O. NO. | Action | Date |
|---|---|---|---|---|
| | | xx | xx | xx |

TARRANT REGIONAL WATER DISTRICT

CDM

Designed by: D. FUNDERLIC
Dwn by: J. PRANGE
Reviewed by: M. OLESON
Submitted by: NAME TITLE
Date: JANUARY 2005
Sol No. XXXXXX
Contr No. XXXXXX
File name: XXXXX
Plot date: XXXXX
Plot scale: XXXXXX

FORT WORTH CENTRAL CITY
PRELIMINARY DESIGN

**BYPASS CHANNEL PLAN AND PROFILE STA 16+00 TO STA 28+00**

SEQUENCE NO.
CG-5
Sheet 12 of 139

NOT FOR CONSTRUCTION
THIS DOCUMENT IS RELEASED FOR THE PURPOSE OF INTERIM REVIEW UNDER THE AUTHORITY OF DONALD R FUNDERLIC TEXAS NO: 61169 ON DATE: 01/13/2005 IT IS NOT TO BE USED FOR CONSTRUCTION, BIDDING OR PERMIT PURPOSES.

DESIGN FILE: DRAWING NAME

Contr No.

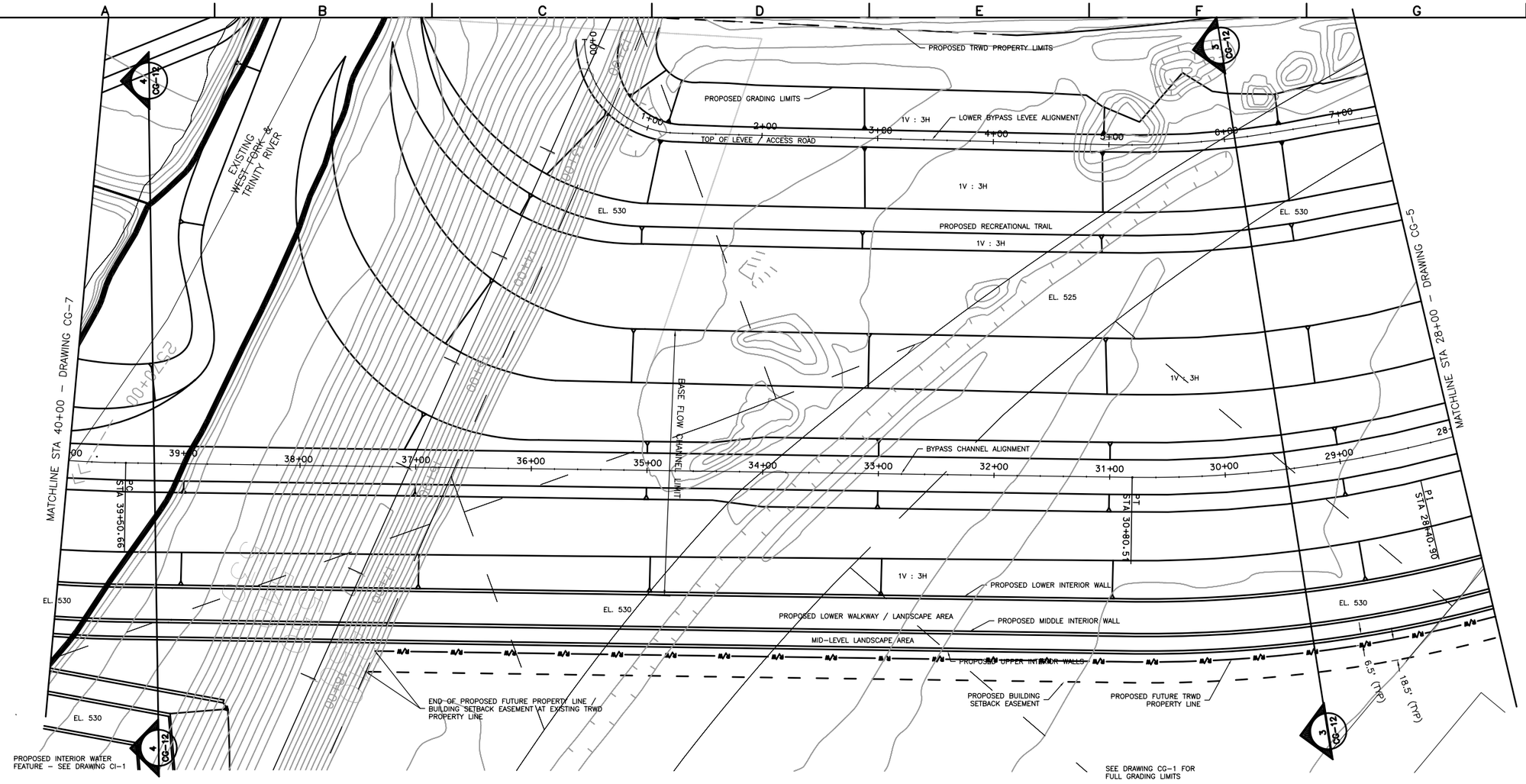


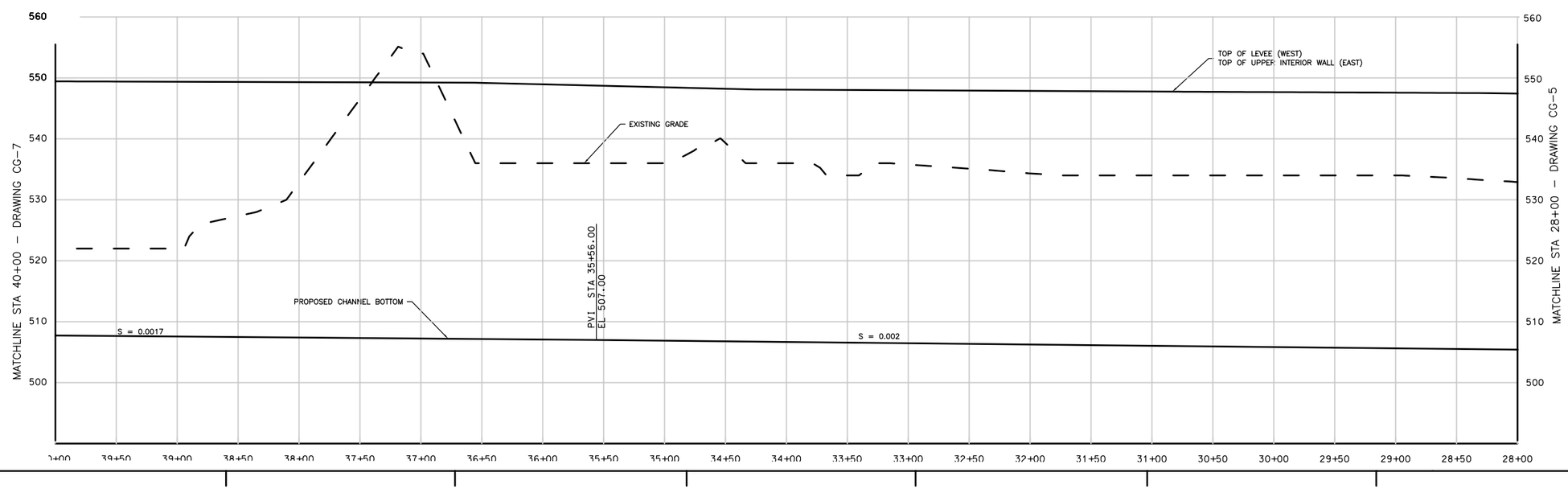


50' 25' 0 50'

SCALE: 1"= 100'-0"
HALF-SIZE PRINT

NOTES:

1. REFER TO C-2 FOR BYPASS CHANNEL KEY PLAN.
2. REFER TO CG-12 FOR TYPICAL SECTIONS.
3. REFER TO GI-1 FOR LEGEND AND ABBREVIATIONS.
4. REFER TO CU DRAWINGS FOR UTILITY WORK IN THIS AREA. (WORK BY OTHERS)
5. CONTRACTOR SHALL CLEAR AND GRUB TO GRADING LIMITS.
6. REFER TO GR-1 FOR BYPASS CHANNEL AND LOWER BYPASS LEVEE ALIGNMENT TABLE.
7. REFER TO CP-1 FOR TRANSPORTATION SITE PLAN.
8. REFER TO CG-1 FOR FULL GRADING LIMITS.
9. REFER TO SB-1 TO SB-3 FOR INTERIOR RETATINING WALL DETAILS.

US Army Corps of Engineers
Fort Worth District

| Symbol | Description | By | W.O. NO. | By | Action | By | Date |
|---|---|---|---|---|---|---|---|

DESIGN FILE: DRAWING NAME

TARRANT REGIONAL WATER DISTRICT

Designed by: D. FUNDERLICH
Dwn by: J. PRANGE
Reviewed by: M. OLESON
Submitted by: NAME TITLE
Date: JANUARY 2005
Sol No. XXXXXX
Contr No. XXXXXX
File name: XXXXX
Plot date: XXXXX
Plot scale: XXXXXX

CDM

FORT WORTH CENTRAL CITY
PRELIMINARY DESIGN

# BYPASS CHANNEL PLAN AND PROFILE STA 28+00 TO STA 40+00

SEQUENCE NO.
CG-6
Sheet 13 of 139

**NOT FOR CONSTRUCTION**

THIS DOCUMENT IS RELEASED FOR THE PURPOSE OF INTERIM REVIEW UNDER THE AUTHORITY OF DONALD R FUNDERLIC TEXAS NO: 61169 ON DATE: 01/13/2005 IT IS NOT TO BE USED FOR CONSTRUCTION, BIDDING OR PERMIT PURPOSES.

Contr No.

REFERENCE FILE: xx
REFERENCE FILE: xx
REFERENCE FILE: xx

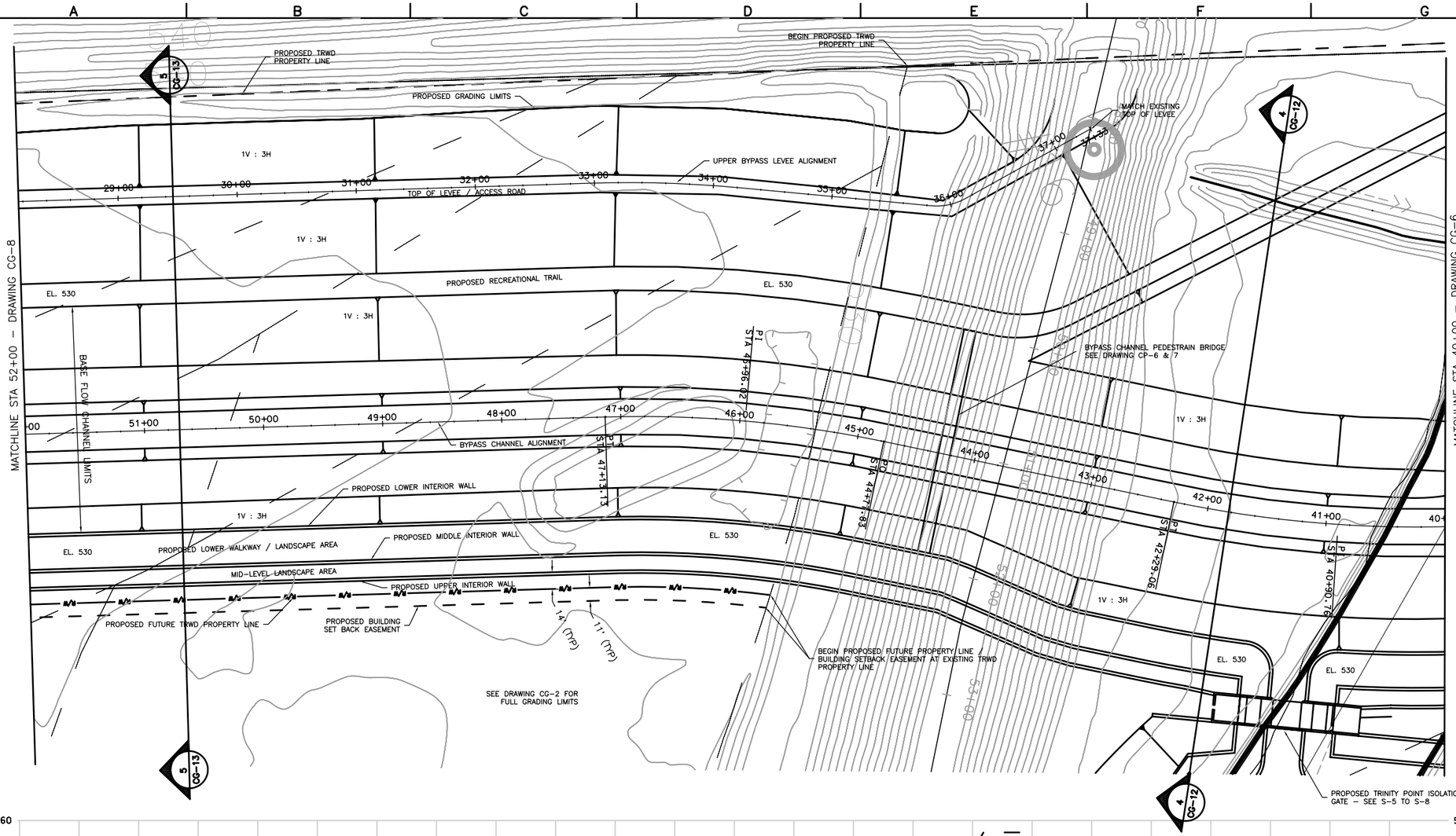


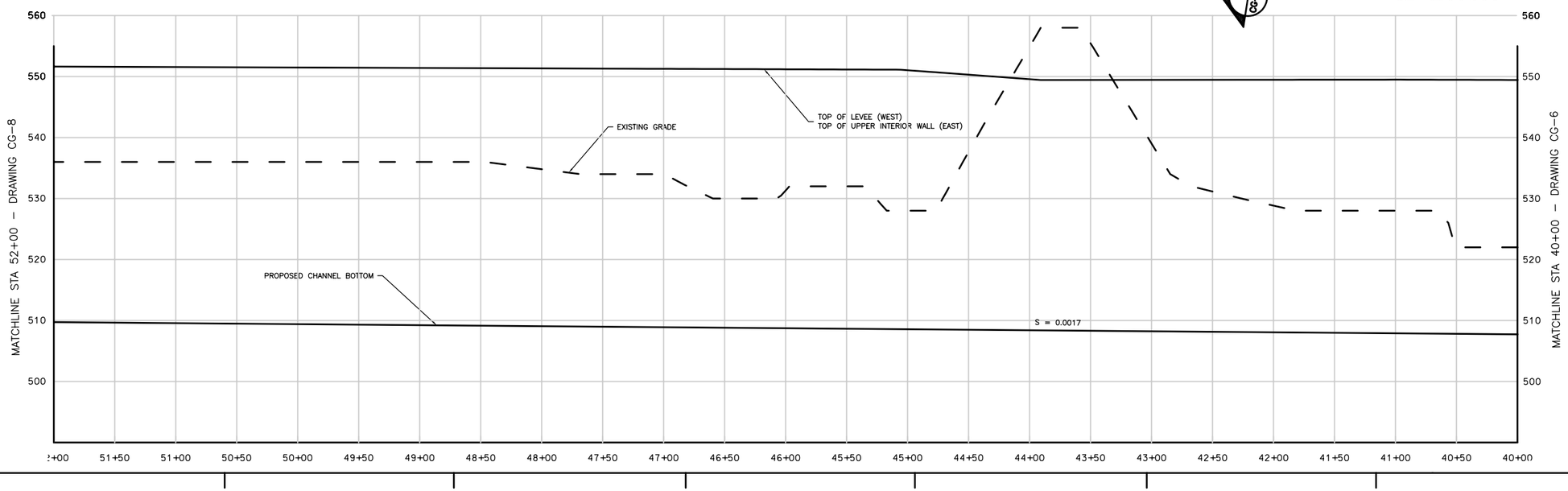


50' 25' 0 50'

SCALE: 1''= 100'-0"
HALF-SIZE PRINT

NOTES:

1. REFER TO C-2 FOR BYPASS CHANNEL KEY PLAN.
2. REFER TO CG-12 & CG-13 FOR TYPICAL SECTIONS.
3. REFER TO GI-1 FOR LEGEND AND ABBREVIATIONS.
4. REFER TO CU DRAWING FOR UTILITY WORK IN THIS AREA. (WORK BY OTHERS)
5. CONTRACTOR SHALL CLEAR AND GRUB TO GRADING LIMITS.
6. REFER TO GR-1 FOR BYPASS CHANNEL & UPPER BYPASS LEVEE ALIGNMENT TABLE.
7. REFER TO CP-1 FOR TRANSPORTATION SITE PLAN.
8. REFER TO CG-1 FOR FULL GRADING PLAN.
9. REFER TO SB-1 TO SB-3 FOR INTERIOR RETAINING WALL DETAILS.

US Army Corps of Engineers
Fort Worth District

| Symbol | Description | D.O. NO. | Action | Date |
|---|---|---|---|---|
| | | xx | xx | xx |

Designed by: D. FUNDERLICH
Dwn by: J. PRANGE
Reviewed by: M. OLESON
Submitted by: NAME TITLE
Date: JANUARY 2005
Sol No. XXXXXX
Contr No. XXXXXX
File name: XXXXX
Plot date: XXXXX
Plot scale: XXXXXX

TARRANT REGIONAL WATER DISTRICT

CDM

FORT WORTH CENTRAL CITY
PRELIMINARY DESIGN

**BYPASS CHANNEL PLAN AND PROFILE STA 40+00 TO 52+00**

SEQUENCE NO.
CG-7
Sheet 14 of 139

NOT FOR CONSTRUCTION
THIS DOCUMENT IS RELEASED FOR THE PURPOSE OF INTERIM REVIEW UNDER THE AUTHORITY OF DONALD R FUNDERLIC TEXAS NO: 61169 ON DATE: 01/13/2005 IT IS NOT TO BE USED FOR CONSTRUCTION, BIDDING OR PERMIT PURPOSES.

DESIGN FILE: DRAWING NAME

Contr No.

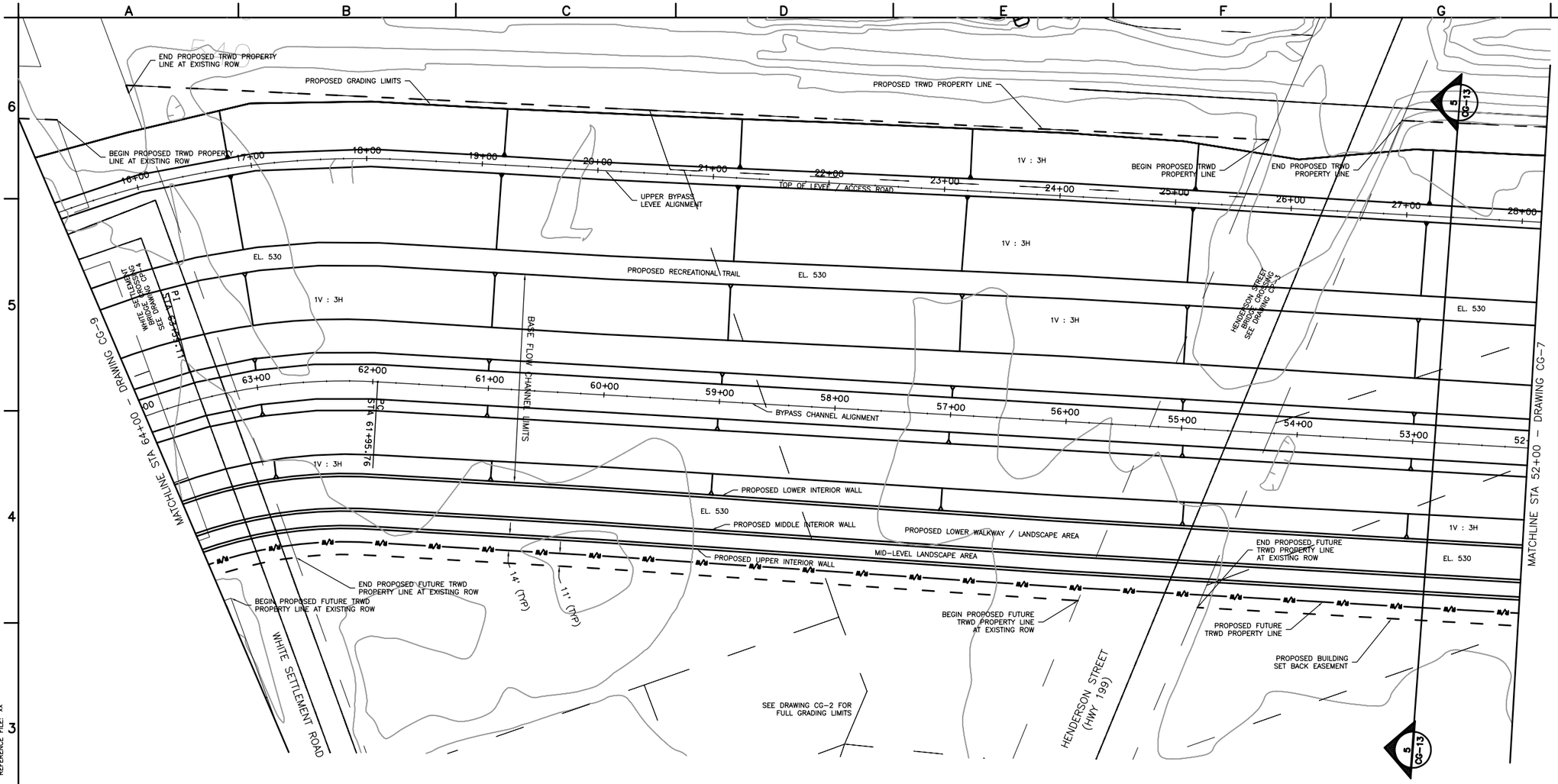


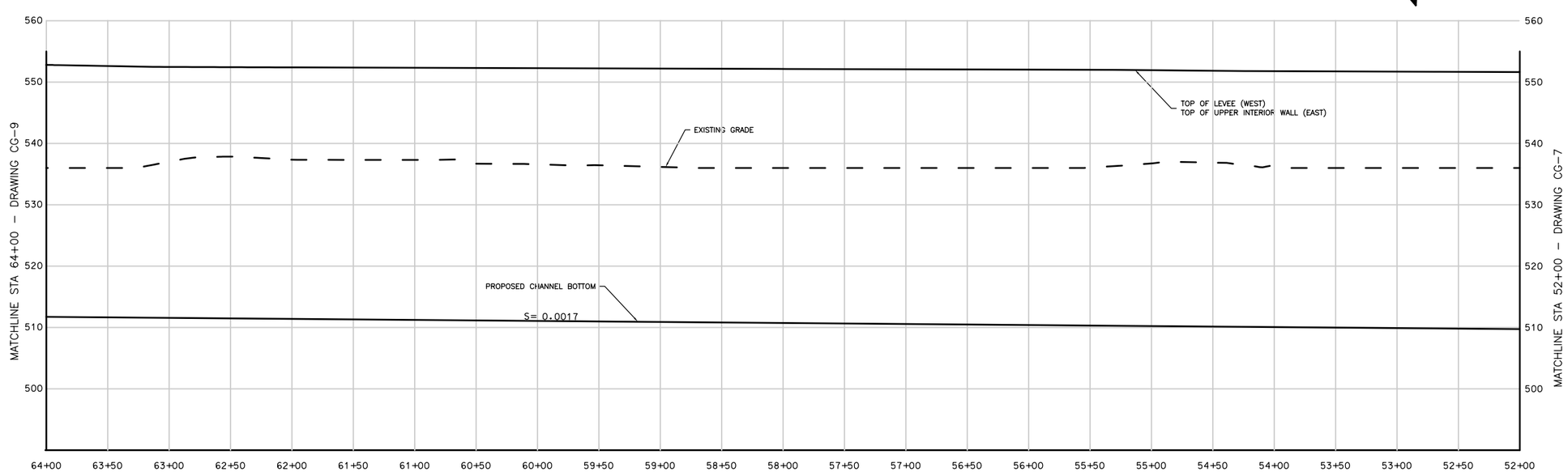


50' 25' 0 50'

SCALE: 1''= 100'-0'
HALF-SIZE PRINT

NOTES:

1. REFER TO C-2 FOR BYPASS CHANNEL KEY PLAN.
2. REFER TO CG-13 FOR TYPICAL SECTIONS.
3. REFER TO GI-1 FOR LEGEND AND ABBREVIATIONS.
4. REFER TO CU DRAWINGS FOR UTILITY WORK IN THIS AREA. (WORK BY OTHERS)
5. CONTRACTOR SHALL CLEAR AND GRUB TO GRADING LIMITS.
6. REFER TO GR-1 FOR BYPASS CHANNEL & UPPER BYPASS LEVEE ALIGNMENT TABLE.
7. REFER TO CP-1 FOR TRANSPORTATION SITE PLAN.
8. REFER TO CG-2 FOR FULL GRADING LIMITS.
9. REFER TO SB-1 TO SB-3 FOR INTERIOR RETAINING WALL DETAILS.

US Army Corps of Engineers
Fort Worth District

| Symbol | Description | W.O. NO. | By | Action | By | Date |
|---|---|---|---|---|---|---|

Date: JANUARY 2005
Sol No. XXXXXX
Contr No. XXXXXX
File name: XXXXX
Plot date: XXXXXX
Plot scale: XXXXXX

Designed by: D. FUNDERLIC
Dwn by: J. PRANGE
Reviewed by: M. OLESON
Submitted by: NAME TITLE

TARRANT REGIONAL WATER DISTRICT

CDM

FORT WORTH CENTRAL CITY PRELIMINARY DESIGN

**BYPASS CHANNEL PLAN AND PROFILE STA 52+00 TO 64+00**

SEQUENCE NO.
CG-8
Sheet 15 of 139

**NOT FOR CONSTRUCTION**
THIS DOCUMENT IS RELEASED FOR THE PURPOSE OF INTERIM REVIEW UNDER THE AUTHORITY OF DONALD R FUNDERLIC TEXAS NO: 61169 ON DATE: 01/13/2005 IT IS NOT TO BE USED FOR CONSTRUCTION, BIDDING OR PERMIT PURPOSES.

DESIGN FILE: DRAWING NAME

Contr No.

REFERENCE FILE: XX
REFERENCE FILE: XX
REFERENCE FILE: XX

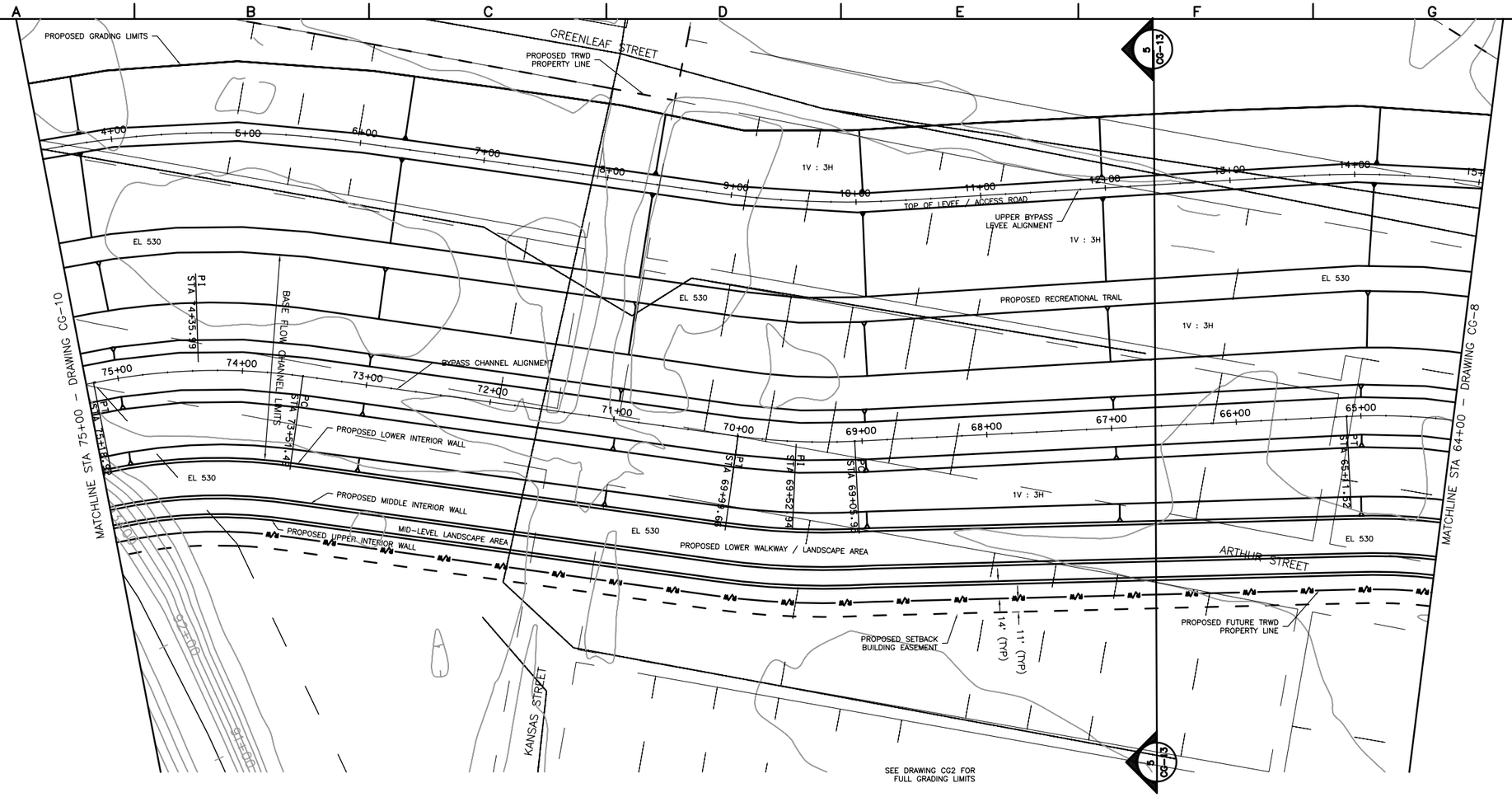


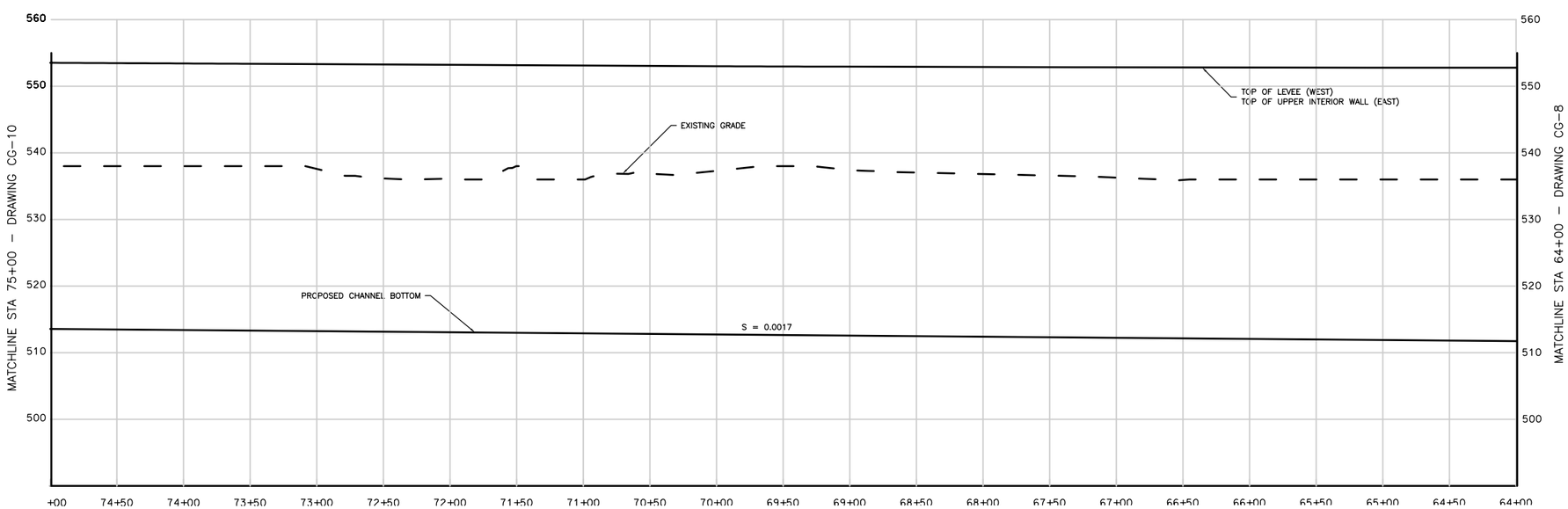


N

50' 25' 0 50'

SCALE: 1''= 100'-0'
HALF-SIZE PRINT

NOTES:

1. REFER TO C-2 FOR BYPASS CHANNEL KEY PLAN.
2. REFER TO CG-13 FOR TYPICAL SECTIONS.
3. REFER TO GI-1 FOR LEGEND AND ABBREVIATIONS.
4. REFER TO CU DRAWINGS FOR UTILITY WORK IN THIS AREA. (WORK BY OTHERS)
5. CONTRACTOR SHALL CLEAR AND GRUB TO GRADING LIMITS.
6. REFER TO GR-1 FOR BYPASS CHANNEL & UPPER BYPASS LEVEE ALIGNMENT TABLE.
7. REFER TO CP-1 FOR TRANSPORTATION SITE PLAN.
8. REFER TO CG-2 FOR FULL GRADING LIMITS.
9. REFER TO SB-1 TO SB-3 FOR INTERIOR RETAINING WALL DETAILS.

US Army Corps of Engineers
Fort Worth District

| Symbol | Description | D.O. NO. | Action | Date |
|---|---|---|---|---|

TARRANT REGIONAL WATER DISTRICT

Designed by: D. FUNDERLICH
Dwn by: J. PRANGE
Reviewed by: M. OLESON
Submitted by: NAME TITLE

Date: JANUARY 2005
Sol No. XXXXXX
Contr No. XXXXXX
File name: XXXXX
Plot date: XXXXX
Plot scale: XXXXXX

CDM

DESIGN FILE: DRAWING NAME

FORT WORTH CENTRAL CITY PRELIMINARY DESIGN

**BYPASS CHANNEL PLAN AND PROFILE STA 64+00 TO STA 75+00**

SEQUENCE NO.
CG-9
Sheet 16 of 139

**NOT FOR CONSTRUCTION**
THIS DOCUMENT IS RELEASED FOR THE PURPOSE OF INTERIM REVIEW UNDER THE AUTHORITY OF DONALD R FUNDERLIC TEXAS NO: 61169 ON DATE: 01/13/2005 IT IS NOT TO BE USED FOR CONSTRUCTION, BIDDING OR PERMIT PURPOSES.

REFERENCE FILE: XX
REFERENCE FILE: XX
REFERENCE FILE: XX

Contr No.

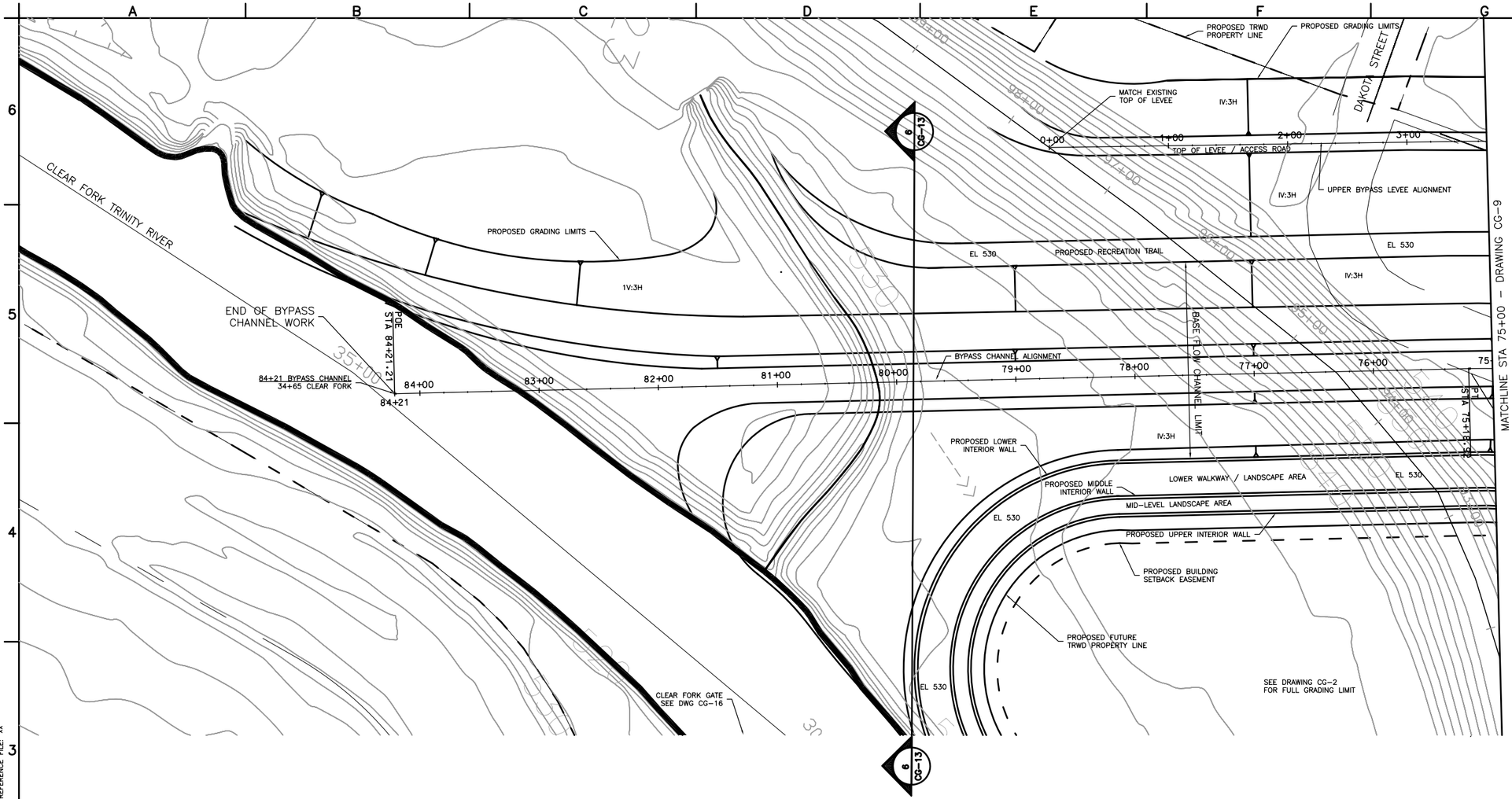


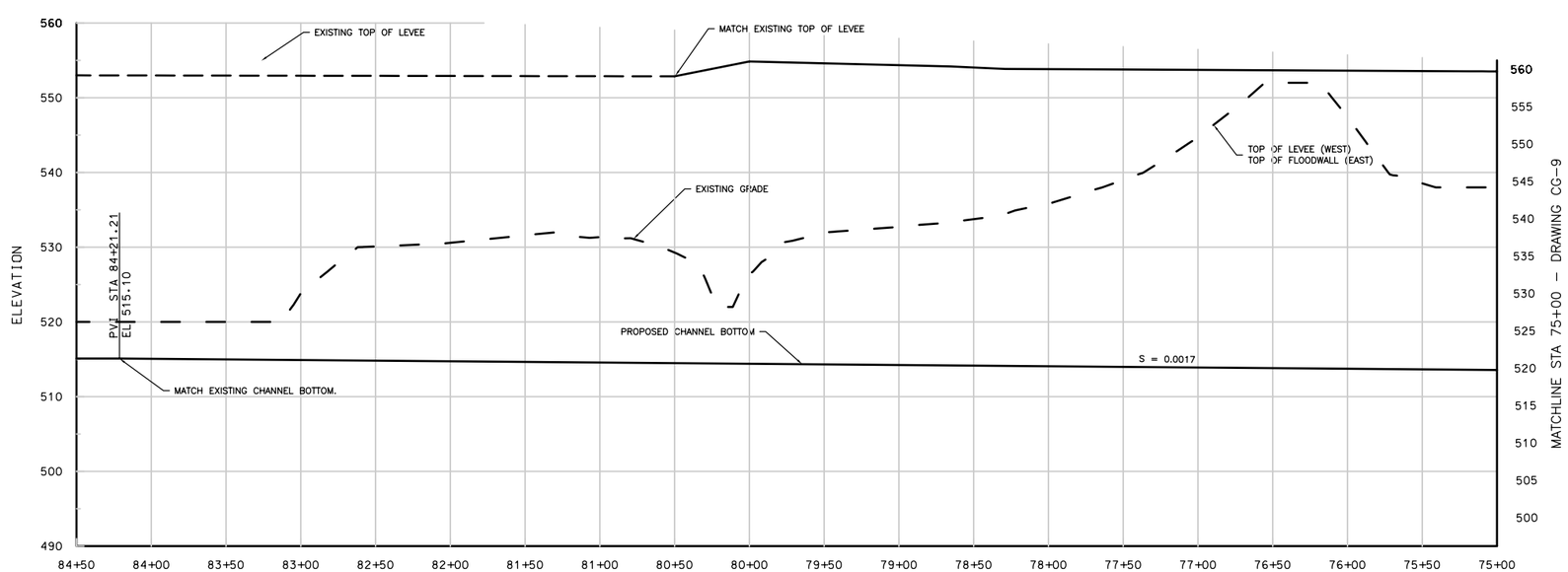


50' 25' 0 50'

SCALE: 1''= 100'-0'
HALF-SIZE PRINT

NOTES:

1. REFER TO C-2 FOR BYPASS CHANNEL KEY PLAN.
2. REFER TO CG-13 FOR TYPICAL CROSS SECTIONS.
3. REFER TO GI-1 FOR LEGEND AND ABBREVIATIONS.
4. REFER TO CU DRAWINGS FOR UTILITY WORK IN THIS AREA. (WORK BY OTHERS)
5. CONTRACTOR SHALL CLEAR AND GRUB TO GRADING LIMITS.
6. REFER TO GR-1 FOR BYPASS CHANNEL & UPPER BYPASS LEVEE ALIGNMENT TABLE.
7. REFER TO CP-1 FOR TRANSPORTATION SITE PLAN.
8. REFER TO CG-2 FOR FULL GRADING LIMITS.
9. REFER TO SB-1 TO SB-3 FOR INTERIOR RETAINING WALL DETAILS.

US Army Corps of Engineers
Fort Worth District

| Symbol | Description | I.O. NO. | Action | Date |
|---|---|---|---|---|
| | | | | |

DESIGN FILE: DRAWING NAME

TARRANT REGIONAL WATER DISTRICT

CDM

Designed by: D. FUNDERLICH
Dwn by: J. PRANGE
Reviewed by: M. OLESON
Submitted by: NAME TITLE
Date: JANUARY 2005
Sol No. XXXXXX
Contr No. XXXXXX
File name: XXXXX
Plot date: XXXXXX
Plot scale: XXXXXX

FORT WORTH CENTRAL CITY
PRELIMINARY DESIGN

# BYPASS CHANNEL PLAN AND PROFILE STA 75+00 TO END STA

SEQUENCE NO.
CG-10
Sheet 17 of 139

**NOT FOR CONSTRUCTION**

THIS DOCUMENT IS RELEASED FOR THE PURPOSE OF INTERIM REVIEW UNDER THE AUTHORITY OF DONALD R FUNDERLIC TEXAS NO: 61169 ON DATE: 01/13/2005 IT IS NOT TO BE USED FOR CONSTRUCTION, BIDDING OR PERMIT PURPOSES.

REFERENCE FILE: xx
REFERENCE FILE: xx
REFERENCE FILE: xx

Contr No.

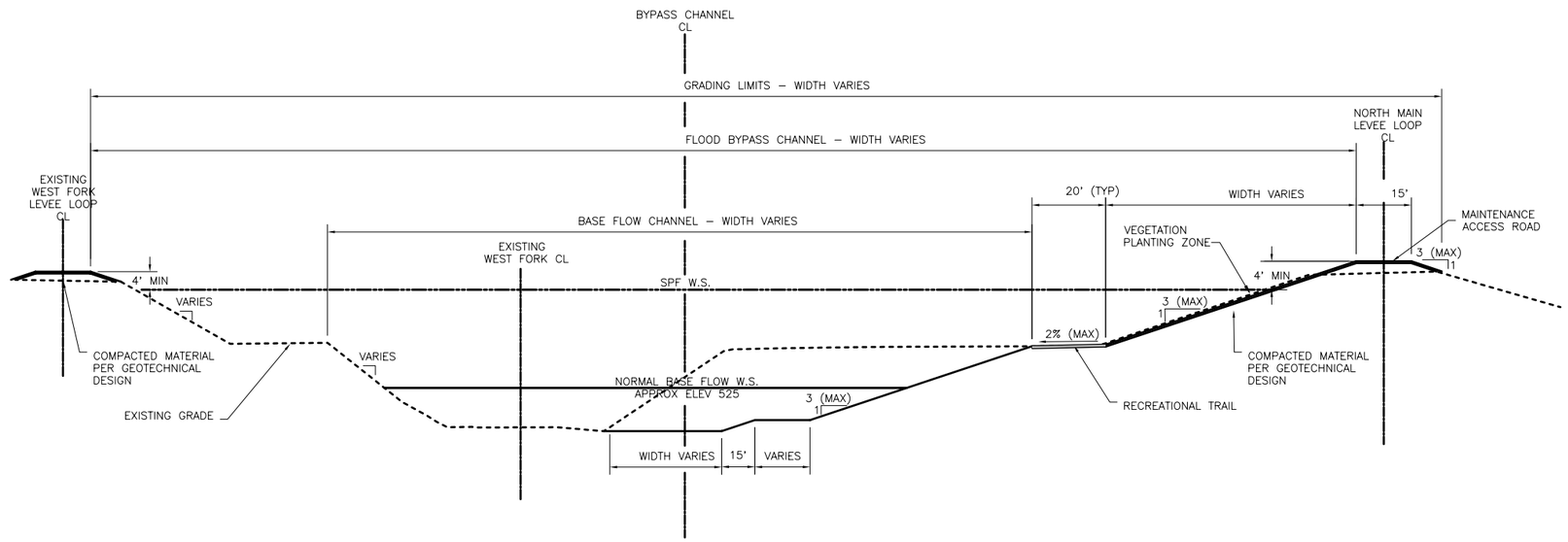


BYPASS CHANNEL, WEST FORK TRANSITION – TYPICAL SECTION STA 0+00 TO STA 7+92

**SECTION** 1
NTS –

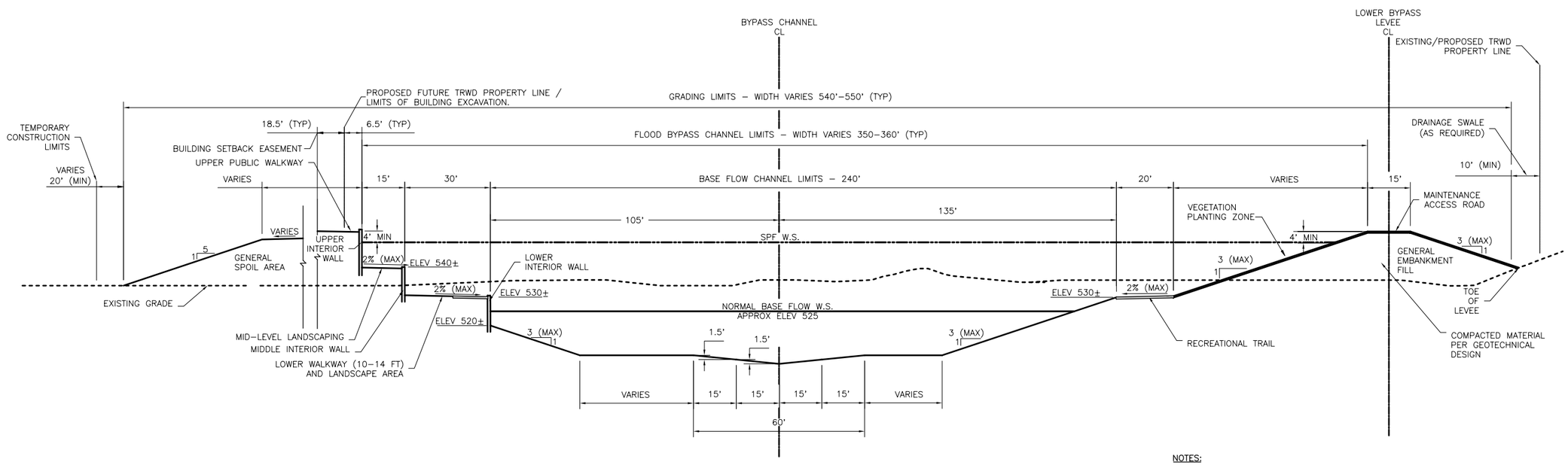


BYPASS CHANNEL, LOWER – TYPICAL SECTION STA 7+92 TO STA 21+54

**SECTION** 2
NTS –

NOTES:

1. TYPICAL SECTION STATION RANGES ARE INTENDED TO REFLECT THE MOST APPLICABLE TYPICAL SECTION FOR THE AREA STATED. ACTUAL CROSS SECTIONS MAY VARY.

2. REFER TO DRAWINGS SB–1 TO SB–3 FOR RETAINING WALL DETAILS.

**NOT FOR CONSTRUCTION**

THIS DOCUMENT IS RELEASED FOR THE PURPOSE OF INTERIM REVIEW UNDER THE AUTHORITY OF DONALD R FUNDERLIC TEXAS NO: 61169 ON DATE: 01/13/2005 IT IS NOT TO BE USED FOR CONSTRUCTION, BIDDING OR PERMIT PURPOSES.

US Army Corps of Engineers
Fort Worth District

| Symbol | Description | D.O. NO. | By | Action | By | Date |
|---|---|---|---|---|---|---|

DESIGN FILE: DRAWING NAME

Designed by: D. FUNDERLIC
Dwn by: J. PRANGE
Reviewed by: M. OLESON
Submitted by: NAME TITLE
Date: JANUARY 2005
Sol No. XXXXXX
Contr No. XXXXXX
File name: XXXXX
Plot date: XXXXXX
Plot scale: XXXXXX

TARRANT REGIONAL WATER DISTRICT

CDM

FORT WORTH CENTRAL CITY PRELIMINARY DESIGN

**BYPASS CHANNEL TYPICAL SECTIONS SHEET 1 OF 3**

SEQUENCE NO.
CG–11
Sheet 18 of 139

Contr No.

REFERENCE FILE: xx
REFERENCE FILE: xx
REFERENCE FILE: xx

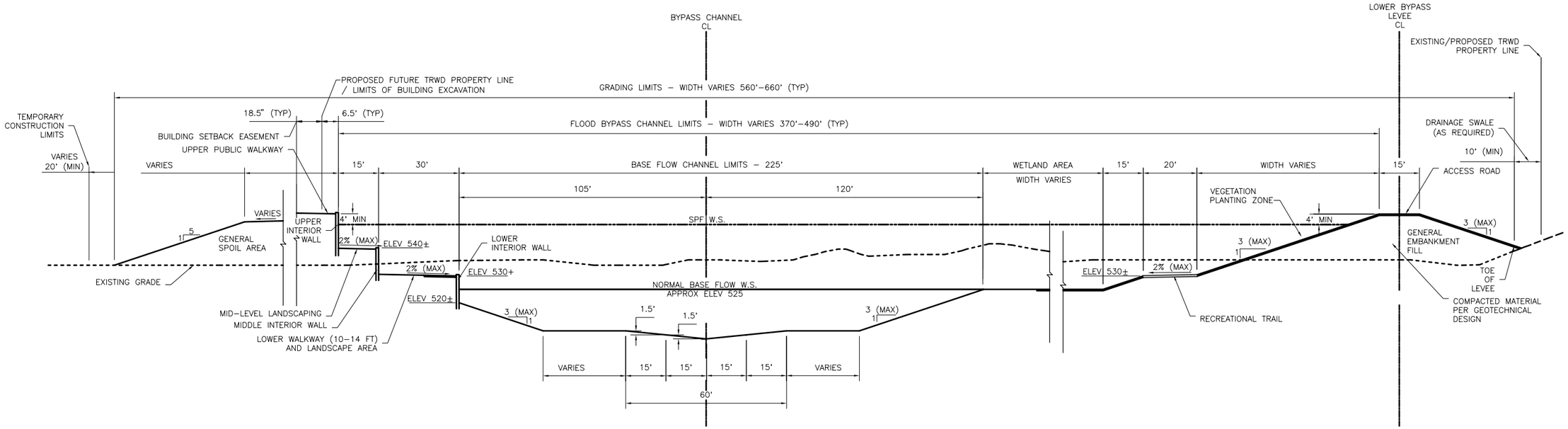


BYPASS CHANNEL, BULGE – TYPICAL SECTION STA 21+54 TO STA 35+00

SECTION 3
NTS

NOTES:

1. TYPICAL SECTION STATION RANGES ARE INTENDED TO REFLECT THE MOST APPLICABLE TYPICAL SECTION FOR THE AREA STATED. ACTUAL CROSS SECTIONS MAY VARY.

2. REFER TO DRAWINGS SB–1 TO SB–3 FOR RETAINING WALL DETAILS.

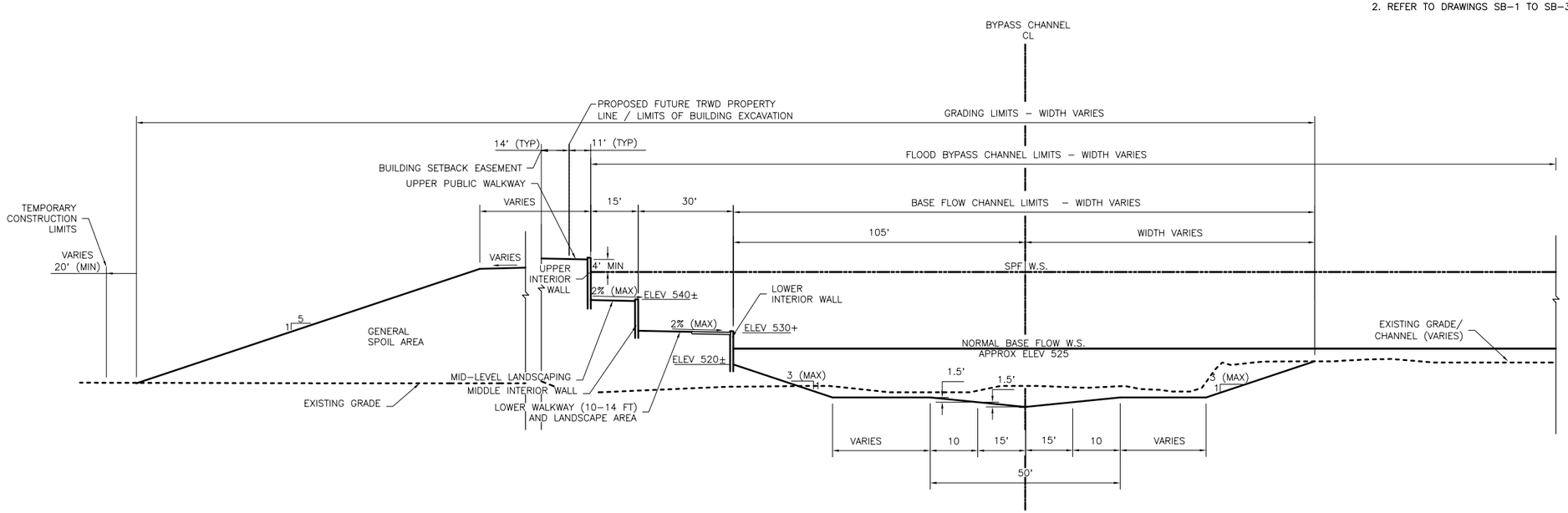


BYPASS CHANNEL, WEST FORK CONFLUENCE – TYPICAL SECTION STA 35+00 TO STA 43+25

SECTION 4
NTS

US Army Corps of Engineers
Fort Worth District

| Symbol | Description | D.O. NO. | Action | Date |
|---|---|---|---|---|
| | | xx | xx | xx |

TARRANT REGIONAL WATER DISTRICT

CDM

Designed by: D. FUNDERLIC
Dwn by: J. PRANGE
Reviewed by: M. OLESON
Submitted by: NAME TITLE
Date: JANUARY 2005
Sol No. XXXXXX
Contr No. XXXXXX
File name: XXXXX
Plot date: XXXXX
Plot scale: XXXXXX

DESIGN FILE: DRAWING NAME

FORT WORTH CENTRAL CITY PRELIMINARY DESIGN

**BYPASS CHANNEL TYPICAL SECTIONS SHEET 2 OF 3**

SEQUENCE NO.
CG–12
Sheet 19 of 139

NOT FOR CONSTRUCTION
THIS DOCUMENT IS RELEASED FOR THE PURPOSE OF INTERIM REVIEW UNDER THE AUTHORITY OF DONALD R FUNDERLIC TEXAS NO: 61169 ON DATE: 01/13/2005 IT IS NOT TO BE USED FOR CONSTRUCTION, BIDDING OR PERMIT PURPOSES.

Contr No.

REFERENCE FILE: xx
REFERENCE FILE: xx
REFERENCE FILE: xx

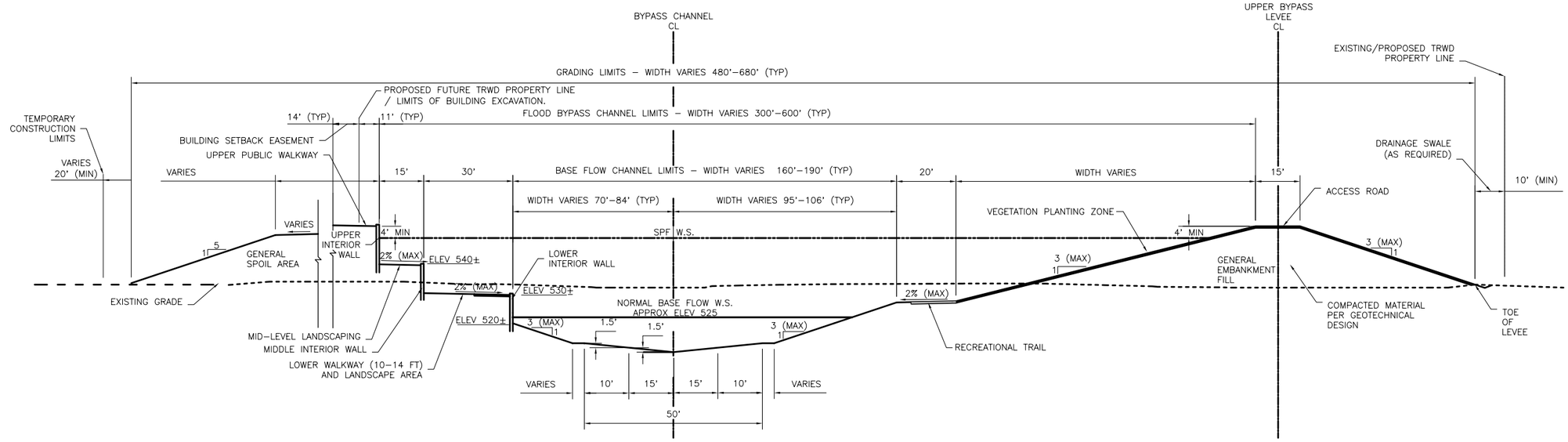


BYPASS CHANNEL, UPPER – TYPICAL SECTION STA 43+25 TO STA 78+20

SECTION 5 –
NTS

NOTES:

1. TYPICAL SECTION STATION RANGES ARE INTENDED TO REFLECT THE MOST APPLICABLE TYPICAL SECTION FOR THE AREA STATED. ACTUAL CROSS SECTIONS MAY VARY.

2. REFER TO DRAWINGS SB–1 TO SB–3 FOR RETAINING WALL DETAILS.

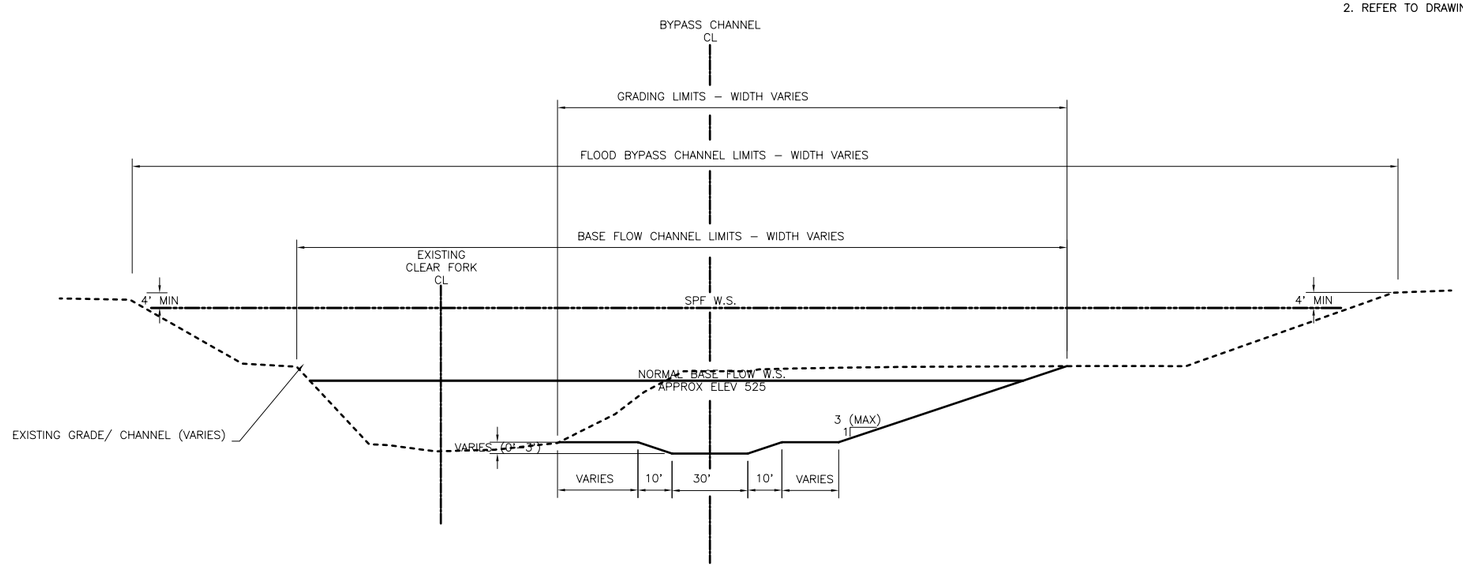


BYPASS CHANNEL, CLEAR FORK TRANSITION – TYPICAL SECTION STA 78+20 TO STA 84+21

SECTION 6 –
NTS

US Army Corps of Engineers
Fort Worth District

| Symbol | Description | D.O. NO. | Action | Date |
|---|---|---|---|---|

Designed by: D. FUNDERLIC
Dwn by: J. PRANGE
Reviewed by: M. OLESON
Submitted by: NAME TITLE
Date: JANUARY 2005
Sol No. XXXXXX
Contr No. XXXXXX
File name: XXXXX
Plot date: XXXXX
Plot scale: XXXXXX

TARRANT REGIONAL WATER DISTRICT

CDM

FORT WORTH CENTRAL CITY PRELIMINARY DESIGN

**BYPASS CHANNEL TYPICAL SECTIONS SHEET 3 OF 3**

SEQUENCE NO.
CG–13
Sheet 20 of 139

NOT FOR CONSTRUCTION
THIS DOCUMENT IS RELEASED FOR THE PURPOSE OF INTERIM REVIEW UNDER THE AUTHORITY OF DONALD R FUNDERLIC TEXAS NO: 61169 ON DATE: 01/13/2005 IT IS NOT TO BE USED FOR CONSTRUCTION, BIDDING OR PERMIT PURPOSES.

DESIGN FILE: DRAWING NAME

Contr No.

REFERENCE FILE: xx
REFERENCE FILE: xx
REFERENCE FILE: xx

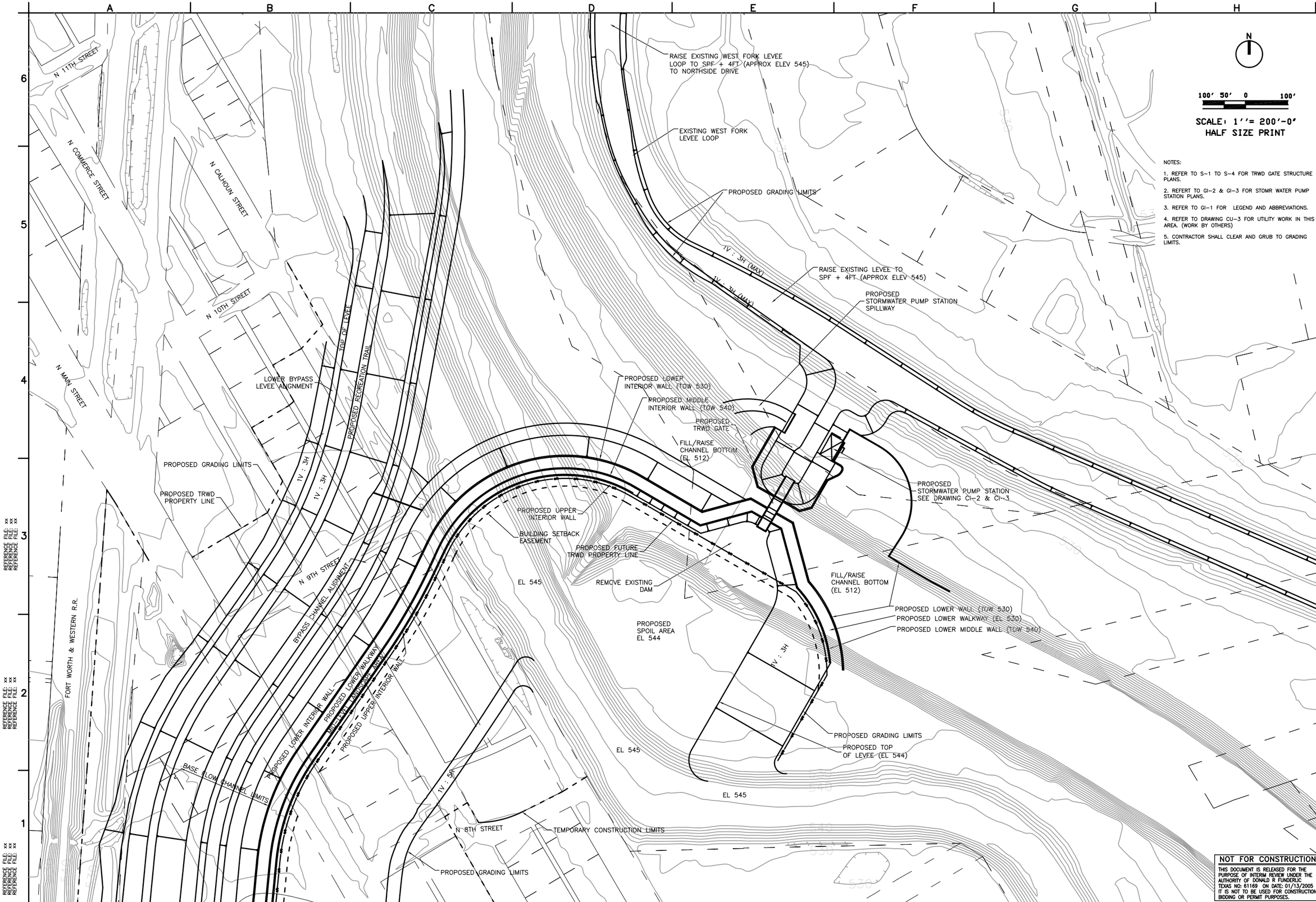


N

100' 50' 0 100'

SCALE: 1''= 200'-0"
HALF SIZE PRINT

NOTES:

1. REFER TO S-1 TO S-4 FOR TRWD GATE STRUCTURE PLANS.
2. REFERT TO GI-2 & GI-3 FOR STOMR WATER PUMP STATION PLANS.
3. REFER TO GI-1 FOR LEGEND AND ABBREVIATIONS.
4. REFER TO DRAWING CU-3 FOR UTILITY WORK IN THIS AREA. (WORK BY OTHERS)
5. CONTRACTOR SHALL CLEAR AND GRUB TO GRADING LIMITS.

US Army Corps of Engineers
Fort Worth District

| Symbol | Description | D.O. NO. | Action | Date |
|---|---|---|---|---|
| | | xx | xx | xx |

Designed by: D. FUNDERLIC
Dwn by: J. PRANGE
Reviewed by: M. OLESON
Submitted by: NAME TITLE
Date: JANUARY 2005
Sol No. XXXXXX
Contr No. XXXXXX
File name: XXXXX
Plot date: XXXXX
Plot scale: XXXXXX

TARRANT REGIONAL WATER DISTRICT

CDM

FORT WORTH CENTRAL CITY
PRELIMINARY DESIGN

**BYPASS CHANNEL GRADING PLAN TRWD GATE STRUCTURE**

SEQUENCE NO.
CG-14
Sheet 21 of 139

DESIGN FILE: DRAWING NAME

Contr No.

**NOT FOR CONSTRUCTION**

THIS DOCUMENT IS RELEASED FOR THE PURPOSE OF INTERIM REVIEW UNDER THE AUTHORITY OF DONALD R FUNDERLIC TEXAS NO: 61169 ON DATE: 01/13/2005 IT IS NOT TO BE USED FOR CONSTRUCTION, BIDDING OR PERMIT PURPOSES.

REFERENCE FILE: xx
REFERENCE FILE: xx
REFERENCE FILE: xx

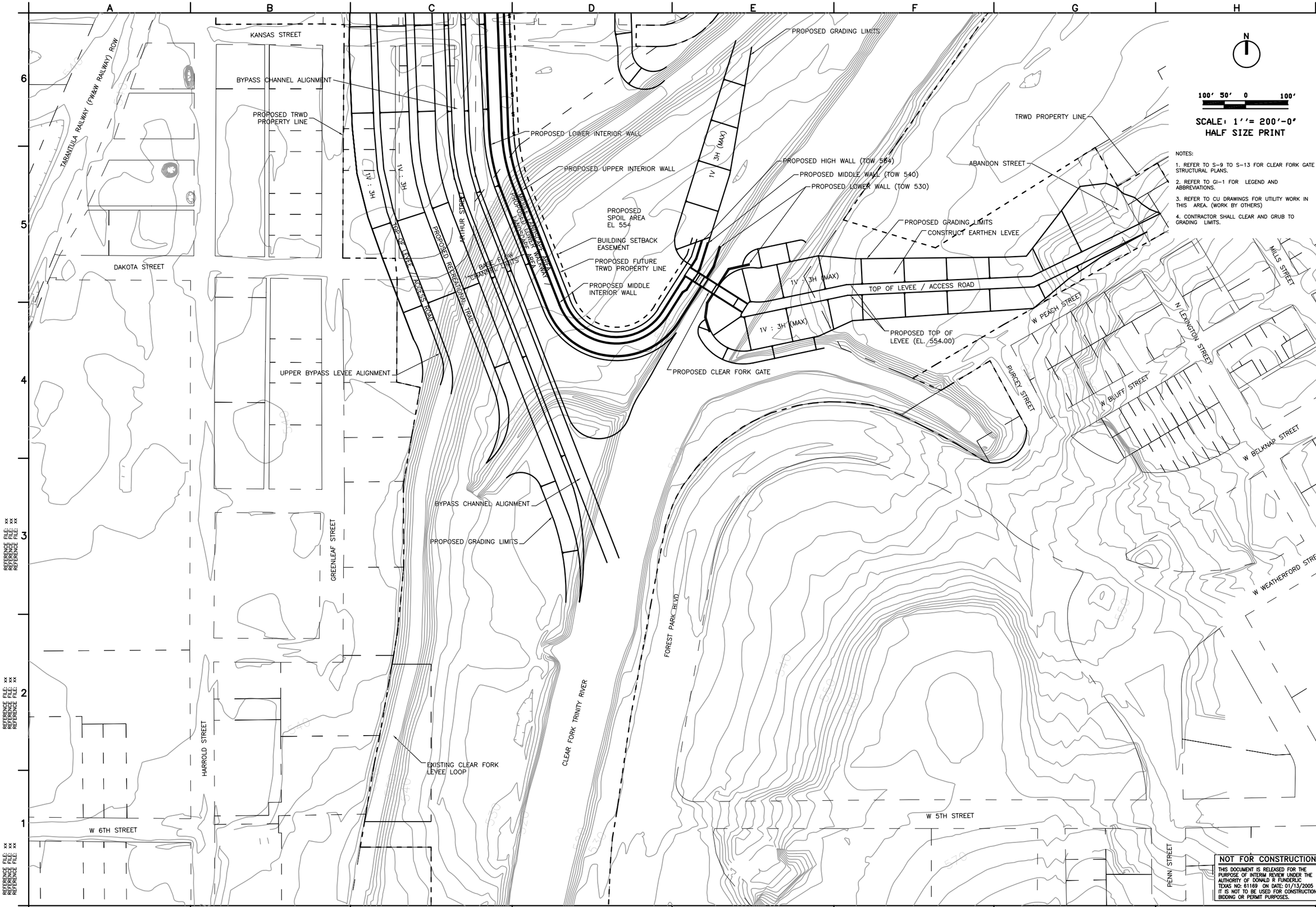


NOTES:

1. REFER TO S-9 TO S-13 FOR CLEAR FORK GATE STRUCTURAL PLANS.
2. REFER TO GI-1 FOR LEGEND AND ABBREVIATIONS.
3. REFER TO CU DRAWINGS FOR UTILITY WORK IN THIS AREA. (WORK BY OTHERS)
4. CONTRACTOR SHALL CLEAR AND GRUB TO GRADING LIMITS.

US Army Corps of Engineers
Fort Worth District

| Symbol | Description | Date | W.O. NO. | By | Action | By | Date |
|---|---|---|---|---|---|---|---|

Date: JANUARY 2005
Designed by: D. FUNDERLIC
Sol No. XXXXXX
Dwn by: J. PRANGE
Contr No. XXXXXX
Reviewed by: M. OLESON
File name: XXXXX
Plot date: XXXXX
Plot scale: XXXXXX
Submitted by: NAME TITLE

TARRANT REGIONAL WATER DISTRICT

CDM

FORT WORTH CENTRAL CITY PRELIMINARY DESIGN

**BYPASS CHANNEL GRADING PLAN CLEAR FORK GATE STRUCTURE**

SEQUENCE NO.
CG-15
Sheet 22 of 139

**NOT FOR CONSTRUCTION**

THIS DOCUMENT IS RELEASED FOR THE PURPOSE OF INTERIM REVIEW UNDER THE AUTHORITY OF DONALD R FUNDERLIC TEXAS NO: 61169 ON DATE: 01/13/2005 IT IS NOT TO BE USED FOR CONSTRUCTION, BIDDING OR PERMIT PURPOSES.

DESIGN FILE: DRAWING NAME

Contr No.

REFERENCE FILE: XX
REFERENCE FILE: XX
REFERENCE FILE: XX

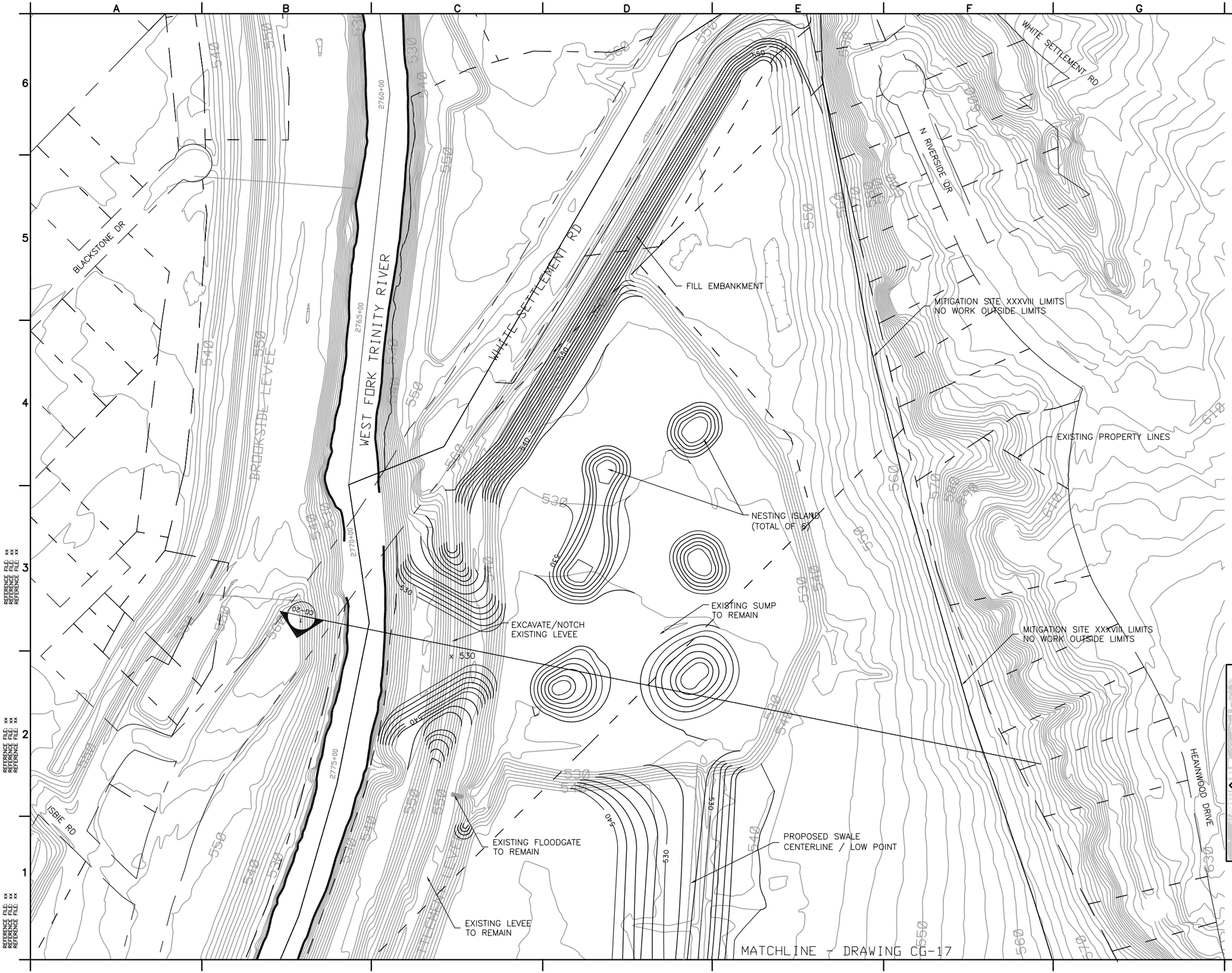

KEY PLAN
NTS

100' 50' 0 100'

SCALE: 1''= 200'-0"
HALF SIZE PRINT

NOTES

1. SEE DRAWING CU-VS-38 FOR UTILITIES

US Army Corps of Engineers
Fort Worth District

| Symbol | Description | D.O. NO. | Action | Date |
|---|---|---|---|---|
| | | xx | xx | xx |

TARRANT REGIONAL WATER DISTRICT

CDM

Designed by: D. FUNDERLIC
Dwn by: J. PRANGE
Reviewed by: M. OLESON
Submitted by: NAME TITLE
Date: JANUARY 2005
Sol No. XXXXXX
Contr No. XXXXXX
File name: XXXXX
Plot date: XXXXX
Plot scale: XXXXXX

FORT WORTH CENTRAL CITY
PRELIMINARY DESIGN

**VALLEY STORAGE MITIGATION GRADING PLAN RIVERBEND - SITE XXXVIII**

SEQUENCE NO.
CG-16
Sheet 23 of 139

**NOT FOR CONSTRUCTION**

THIS DOCUMENT IS RELEASED FOR THE PURPOSE OF INTERIM REVIEW UNDER THE AUTHORITY OF DONALD R FUNDERLIC TEXAS NO: 61169 ON DATE: 01/13/2005 IT IS NOT TO BE USED FOR CONSTRUCTION, BIDDING OR PERMIT PURPOSES.

DESIGN FILE: DRAWING NAME

Contr No.

MATCHLINE - DRAWING CG-16

WEST FORK TRINITY RIVER

EXCAVATE / NOTCH EXISTING LEVEE

PROPOSED SWALE CENTERLINE / LOW POINT

EXISTING LEVEE TO REMAIN

EXCAVATION SPOIL AREA

EXCAVATE SWALE PER ECOSYSTEM ENHANCEMENT PLAN

PROPOSED EARTHEN LEVEE (5:1 FORESLOPE 3:1 BACKSLOPE)

EXISTING PROPERTY LINES

RIVERSIDE DR

EXCAVATE/NOTCH EXISTING LEVEE

EXCAVATION SPOIL AREA

PROPOSED TOP OF LEVEE EL 564.0

MITIGATION SITE XXXVIII LIMITS NO WORK OUTSIDE LIMITS

MATCHLINE - DRAWING CG-18

US Army Corps of Engineers
Fort Worth District

100' 50' 0 100'

SCALE: 1''= 200'-0"
HALF SIZE PRINT

NOTES

1. SEE DRAWING CU-VS-38 AND CU-VS-39 FOR UTILITIES

| Symbol | Description | By | D.O. NO. | By | Action | By | Date |
|---|---|---|---|---|---|---|---|

TARRANT REGIONAL WATER DISTRICT

Designed by: D. FUNDERLIC
Dwn by: J. PRANGE
Reviewed by: M. OLESON
Submitted by: NAME TITLE

Date: JANUARY 2005
Sol No. XXXXXX
Contr No. XXXXXX
File name: XXXXX
Plot date: XXXXX
Plot scale: XXXXXX

CDM

FORT WORTH CENTRAL CITY
PRELIMINARY DESIGN

**VALLEY STORAGE MITIGATION**
**GRADING PLAN**
**RIVERBEND - SITE XXXVIII**

KEY PLAN
NTS

**NOT FOR CONSTRUCTION**

THIS DOCUMENT IS RELEASED FOR THE PURPOSE OF INTERIM REVIEW UNDER THE AUTHORITY OF DONALD R FUNDERLIC TEXAS NO: 61169 ON DATE: 01/13/2005 IT IS NOT TO BE USED FOR CONSTRUCTION, BIDDING OR PERMIT PURPOSES.

SEQUENCE NO.
CG-17



DESIGN FILE: DRAWING NAME

Contr No.

REFERENCE FILE: xx
REFERENCE FILE: xx
REFERENCE FILE: xx

US Army Corps of Engineers
Fort Worth District

100' 50' 0 100'

SCALE: 1''= 200'-0'
HALF SIZE PRINT

NOTES

1. SEE DRAWING CU-VS-39 FOR UTILITIES

| Symbol | Description | P.O. NO. | By | Action | By | Date |
|---|---|---|---|---|---|---|

TARRANT REGIONAL WATER DISTRICT

CDM

Designed by: D. FUNDERLIC
Dwn. by: J. PRANGE
Reviewed by: M. OLESON
Submitted by: NAME TITLE

Date: JANUARY 2005
Sol No. XXXXXX
Contr No. XXXXXX
File name: XXXXX
Plot date: XXXXXX
Plot scale: XXXXXX

DESIGN FILE: DRAWING NAME

KEY PLAN
NTS

NOT FOR CONSTRUCTION
THIS DOCUMENT IS RELEASED FOR THE PURPOSE OF INTERIM REVIEW UNDER THE AUTHORITY OF DONALD R FUNDERLIC TEXAS NO: 61169 ON DATE: 01/13/2005 IT IS NOT TO BE USED FOR CONSTRUCTION, BIDDING OR PERMIT PURPOSES.

FORT WORTH CENTRAL CITY
PRELIMINARY DESIGN

# VALLEY STORAGE MITIGATION GRADING PLAN RIVERBEND - SITE XXXVIII

SEQUENCE NO.
CG-18
Sheet 25 of 139

Contr No.

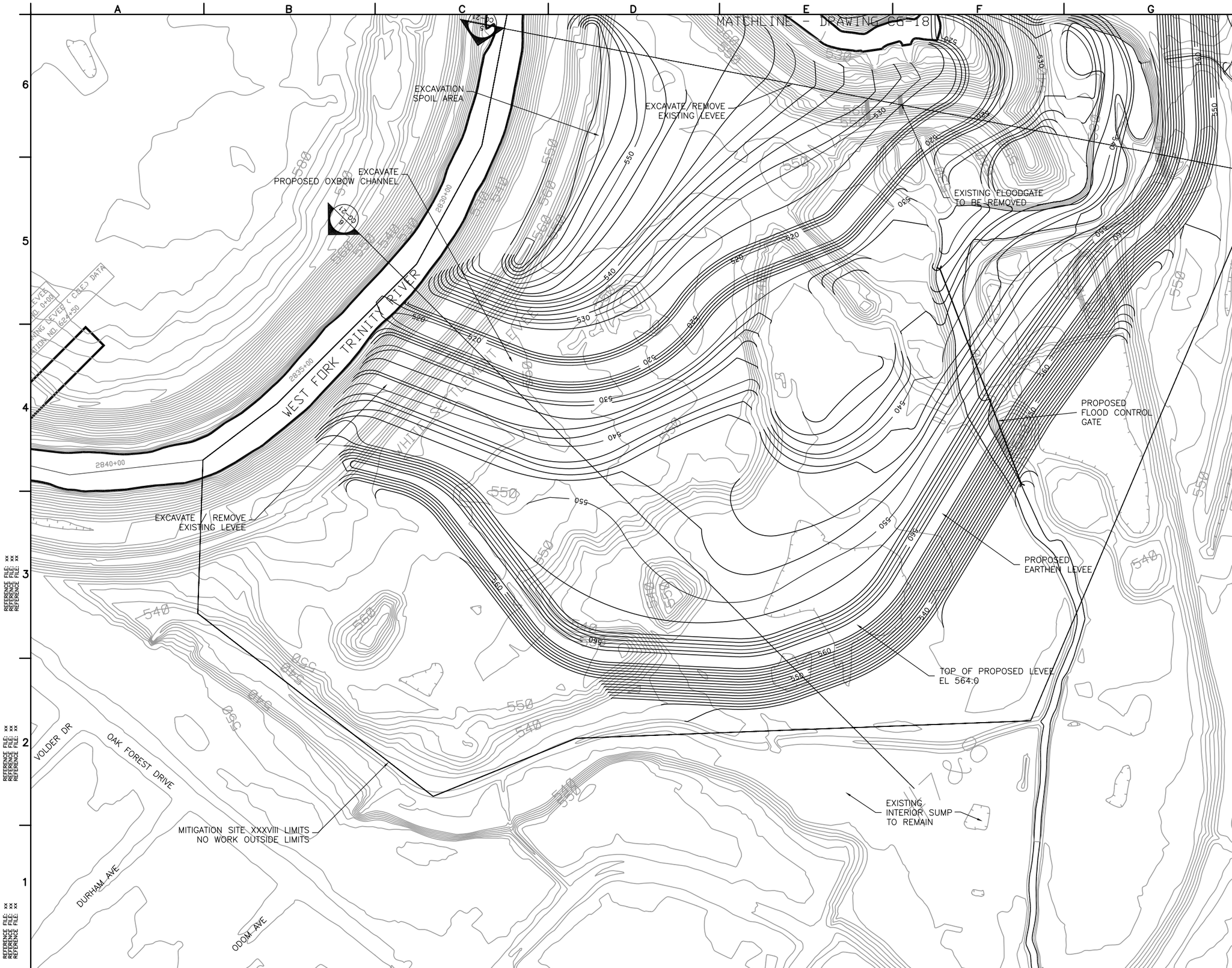


100' 50' 0 100'

SCALE: 1''= 200'-0"
HALF-SIZE PRINT

NOTES

1. SEE DRAWING CU-VS-39 FOR UTILITIES

KEY PLAN
NTS

NOT FOR CONSTRUCTION

THIS DOCUMENT IS RELEASED FOR THE PURPOSE OF INTERIM REVIEW UNDER THE AUTHORITY OF DONALD R FUNDERLIC TEXAS NO: 61169 ON DATE: 01/13/2005 IT IS NOT TO BE USED FOR CONSTRUCTION, BIDDING OR PERMIT PURPOSES.

US Army Corps of Engineers
Fort Worth District

| Symbol | Description | xx D.O. NO. | xx Action | xx Date |
|---|---|---|---|---|

TARRANT REGIONAL WATER DISTRICT

CDM

Designed by: D. FUNDERLIC
Dwn by: J. PRANGE
Reviewed by: M. OLESON
Submitted by:
NAME
TITLE

Date: JANUARY 2005
Sol No. XXXXXX
Contr No. XXXXXX
File name: XXXXX
Plot date: XXXXX
Plot scale: XXXXXX

FORT WORTH CENTRAL CITY
PRELIMINARY DESIGN

VALLEY STORAGE MITIGATION
GRADING PLAN
RIVERBEND - SITE XXXVIII

SEQUENCE NO.
CG-19

Sheet 26 of 139

DESIGN FILE: DRAWING NAME

Contr No.

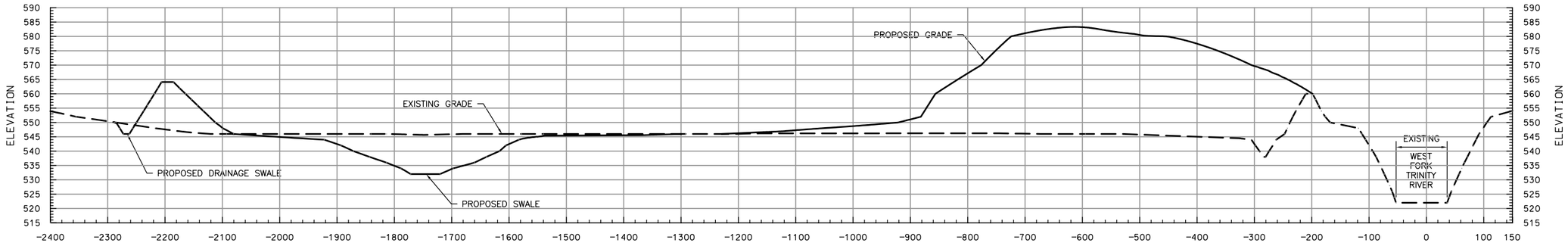


SECTION 3
NTS

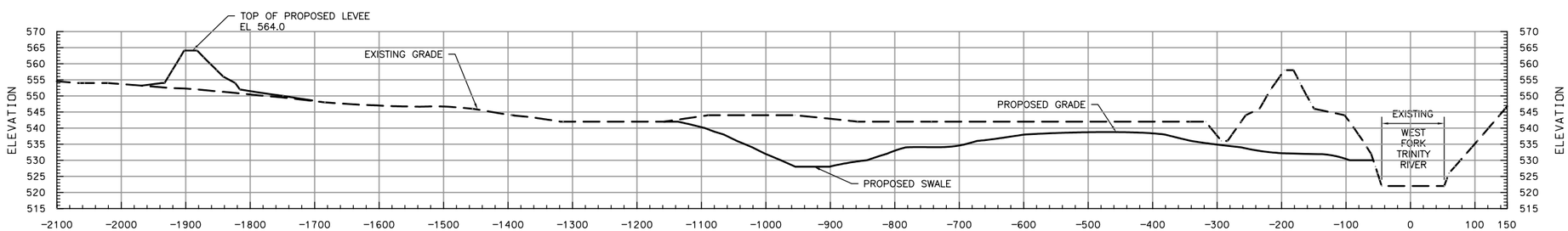


SECTION 2
NTS

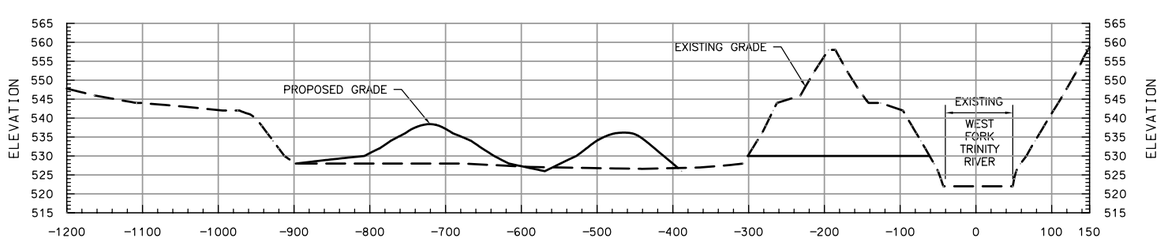


SECTION 1
NTS

SCALE
HORIZ: 1" = 100'
VERT: 1" = 20'

NOTES
1. EXISTING GRADE SHOWN WITHIN WEST FORK TRINITY RIVER LIMITS DOES NOT REFLECT ACTUAL CHANNEL BOTTOM.

NOT FOR CONSTRUCTION
THIS DOCUMENT IS RELEASED FOR THE PURPOSE OF INTERIM REVIEW UNDER THE AUTHORITY OF DONALD R FUNDERLIC TEXAS NO: 61169 ON DATE: 01/13/2005 IT IS NOT TO BE USED FOR CONSTRUCTION, BIDDING OR PERMIT PURPOSES.

US Army Corps of Engineers
Fort Worth District

| Symbol | Description | D.O. NO. | Action | Date |
|---|---|---|---|---|
| | | xx | xx | xx |

Date: JANUARY 2005
Sol No. XXXXXX
Contr No. XXXXXX
File name: XXXXX
Plot date: XXXXXX
Plot scale: XXXXXX
Designed by: Name
Dwn by: Name
Reviewed by: Name
Submitted by: NAME TITLE

TARRANT REGIONAL WATER DISTRICT
CDM

FORT WORTH CENTRAL CITY
PRELIMINARY DESIGN
VALLEY STORAGE MITIGATION
CROSS SECTIONS
RIVERBEND - SITE XXXVIII

SEQUENCE NO.
CG-20
Sheet 27 of 139

DESIGN FILE: DRAWING NAME
Contr No.
REFERENCE FILE: xx
REFERENCE FILE: xx
REFERENCE FILE: xx

SCALE
HORIZ: 1" = 100'
VERT: 1" = 20'

NOTES
1. EXISTING GRADE SHOWN WITHIN WEST FORK TRINITY RIVER LIMITS DOES NOT REFLECT ACTUAL CHANNEL BOTTOM.

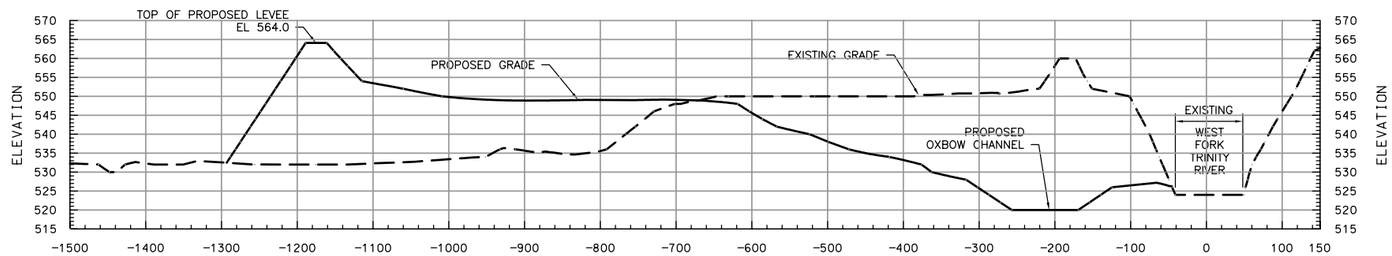


6 SECTION

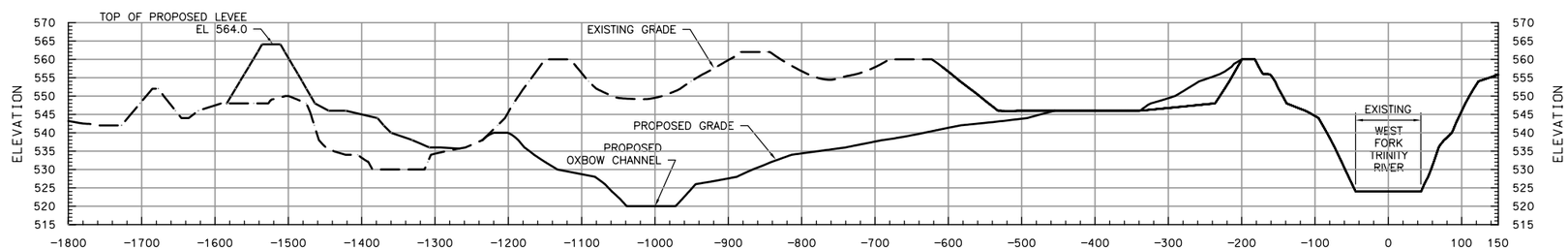


5 SECTION

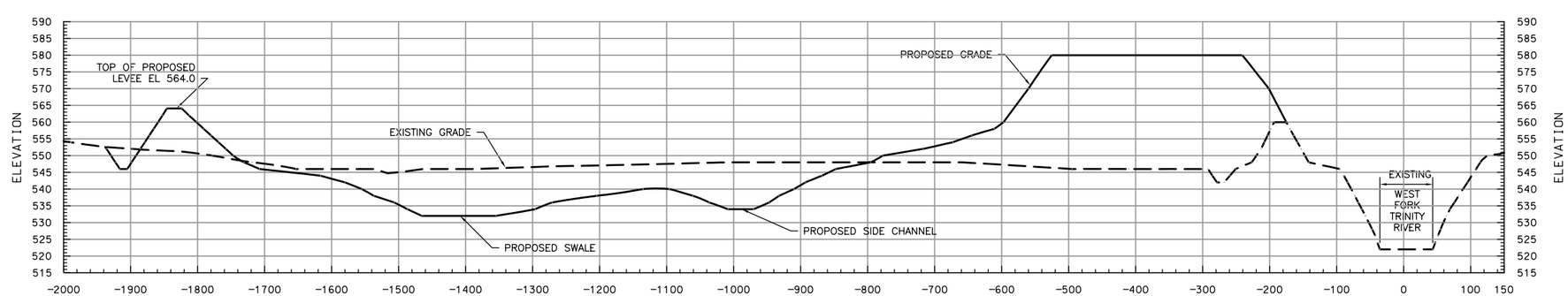


4 SECTION

NOT FOR CONSTRUCTION
THIS DOCUMENT IS RELEASED FOR THE PURPOSE OF INTERIM REVIEW UNDER THE AUTHORITY OF DONALD R FUNDERLIC TEXAS NO: 61169 ON DATE: 01/13/2005 IT IS NOT TO BE USED FOR CONSTRUCTION, BIDDING OR PERMIT PURPOSES.

US Army Corps of Engineers
Fort Worth District

| Symbol | Description | P.O. NO. | Action | Date |
|---|---|---|---|---|
| | | | | |

Date: JANUARY 2005
Sol No. XXXXXX
Contr No. XXXXXX
File name: XXXXX
Plot date: XXXXXX
Plot scale: XXXXXX

Designed by: D. FUNDERLIC
Dwn by: J. PRANGE
Reviewed by: M. OLESON
Submitted by: NAME TITLE

TARRANT REGIONAL WATER DISTRICT

CDM

FORT WORTH CENTRAL CITY
PRELIMINARY DESIGN

VALLEY STORAGE MITIGATION
CROSS SECTIONS
RIVERBEND - SITE XXXVIII

SEQUENCE NO.
CG−21
Sheet 28 of 139

DESIGN FILE: DRAWING NAME

REFERENCE FILE: XX
REFERENCE FILE: XX
REFERENCE FILE: XX

Contr No.

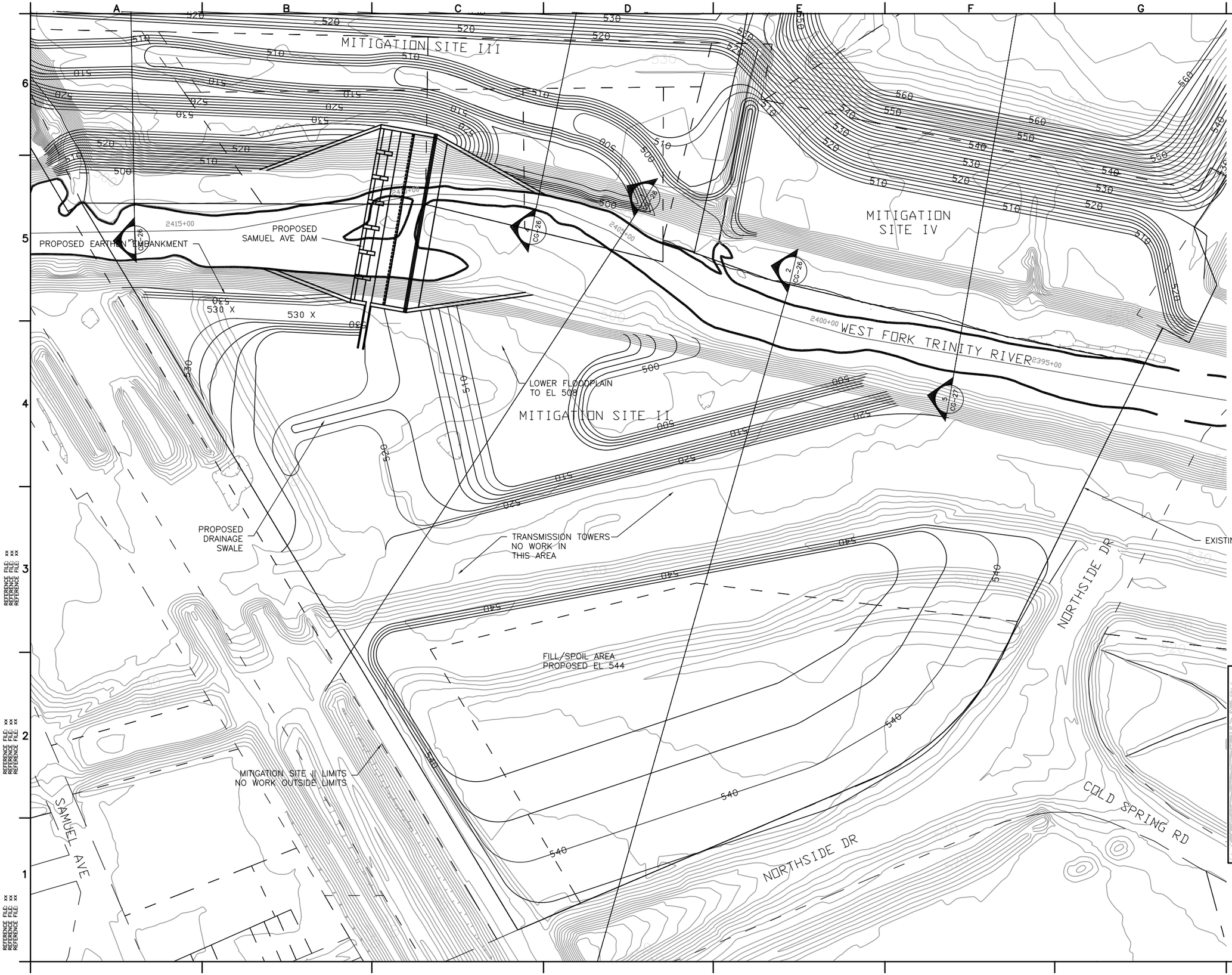


N

100' 50' 0 100'

SCALE: 1''= 200'-0"
HALF SIZE PRINT

NOTES

1. SEE DRAWING CG-23 FOR VALLEY STORAGE MITIGATION SITE III & IV GRADING
2. SEE DRAWING CU-VS-41 FOR UTILITIES

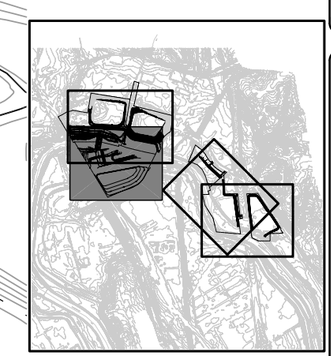

KEY PLAN
NTS

NOT FOR CONSTRUCTION

THIS DOCUMENT IS RELEASED FOR THE PURPOSE OF INTERIM REVIEW UNDER THE AUTHORITY OF DONALD R FUNDERLIC TEXAS NO: 61169 ON DATE: 01/13/2005 IT IS NOT TO BE USED FOR CONSTRUCTION, BIDDING OR PERMIT PURPOSES.

US Army Corps of Engineers
Fort Worth District

| Symbol | Description | D.O. NO. | Action | Date |
|---|---|---|---|---|
| | | xx | xx | xx |

Designed by: D. FUNDERLIC
Dwn by: J. PRANGE
Reviewed by: M. OLESON
Submitted by: NAME TITLE
Date: JANUARY 2005
Sol No. XXXXXX
Contr No. XXXXXX
File name: XXXXX
Plot date: XXXXX
Plot scale: XXXXXX

TARRANT REGIONAL WATER DISTRICT

CDM

FORT WORTH CENTRAL CITY
PRELIMINARY DESIGN

**VALLEY STORAGE MITIGATION GRADING PLAN DOWNSTREAM - SITE II**

SEQUENCE NO.
CG-22
Sheet 29 of 139

DESIGN FILE: DRAWING NAME

Contr No.

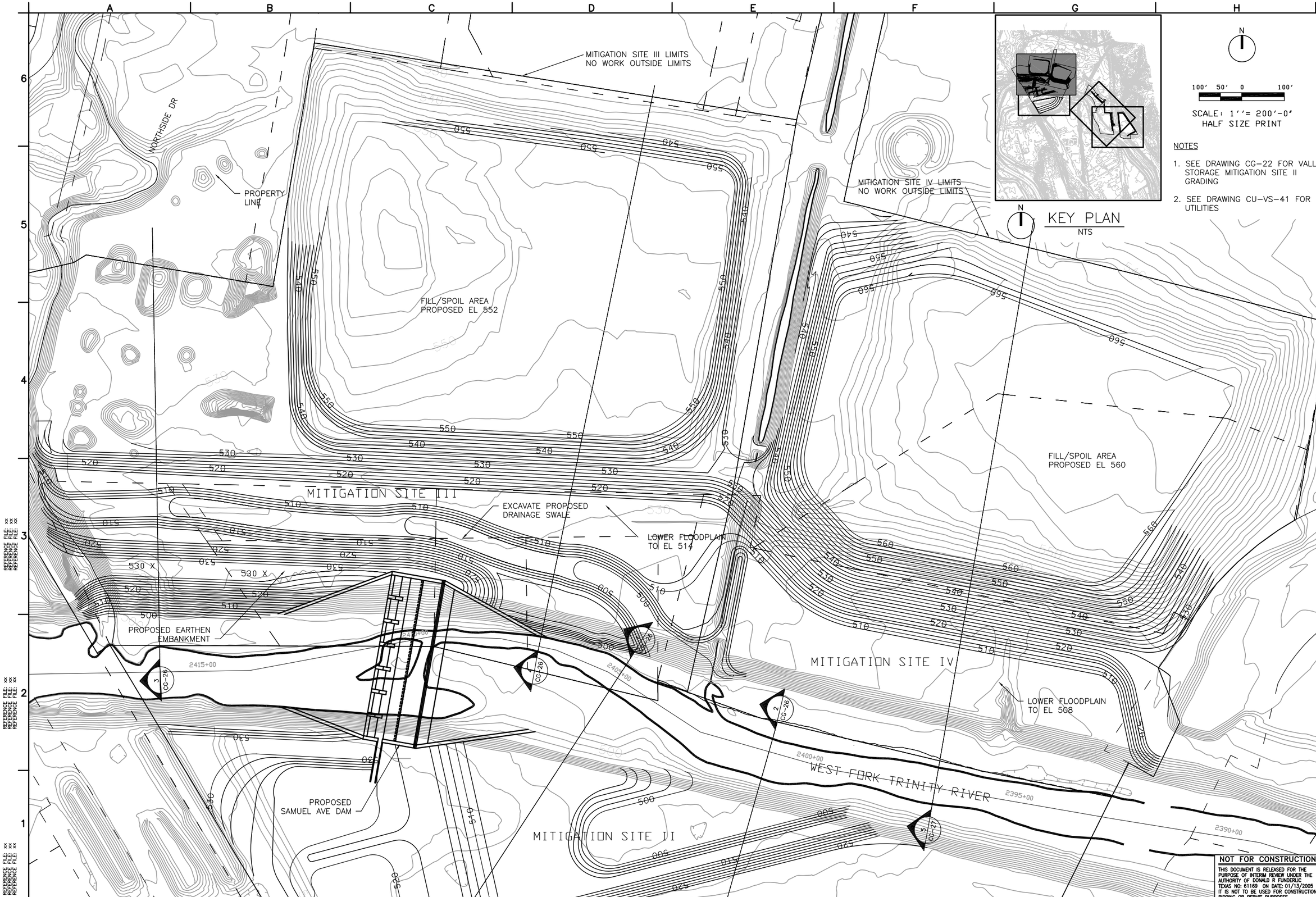


KEY PLAN
NTS

N

100' 50' 0 100'

SCALE: 1''= 200'-0"
HALF SIZE PRINT

NOTES

1. SEE DRAWING CG-22 FOR VALLEY STORAGE MITIGATION SITE II GRADING
2. SEE DRAWING CU-VS-41 FOR UTILITIES

US Army Corps of Engineers
Fort Worth District

| Symbol | Description | By | I.O. NO. | By | Action | By | Date |
|---|---|---|---|---|---|---|---|

DESIGN FILE: DRAWING NAME

Designed by: D. FUNDERLIC
Dwn by: J. PRANGE
Reviewed by: M. OLESON
Submitted by: NAME TITLE

Date: JANUARY 2005
Sol No. XXXXXX
Contr No. XXXXXX
File name: XXXXX
Plot date: XXXXXX
Plot scale: XXXXXX

TARRANT REGIONAL WATER DISTRICT

CDM

FORT WORTH CENTRAL CITY
PRELIMINARY DESIGN

# VALLEY STORAGE MITIGATION GRADING PLAN DOWNSTREAM - SITE III & IV

SEQUENCE NO.
CG-23
Sheet 30 of 139

**NOT FOR CONSTRUCTION**

THIS DOCUMENT IS RELEASED FOR THE PURPOSE OF INTERIM REVIEW UNDER THE AUTHORITY OF DONALD R FUNDERLIC TEXAS NO: 61169 ON DATE: 01/13/2005 IT IS NOT TO BE USED FOR CONSTRUCTION, BIDDING OR PERMIT PURPOSES.

Contr No.

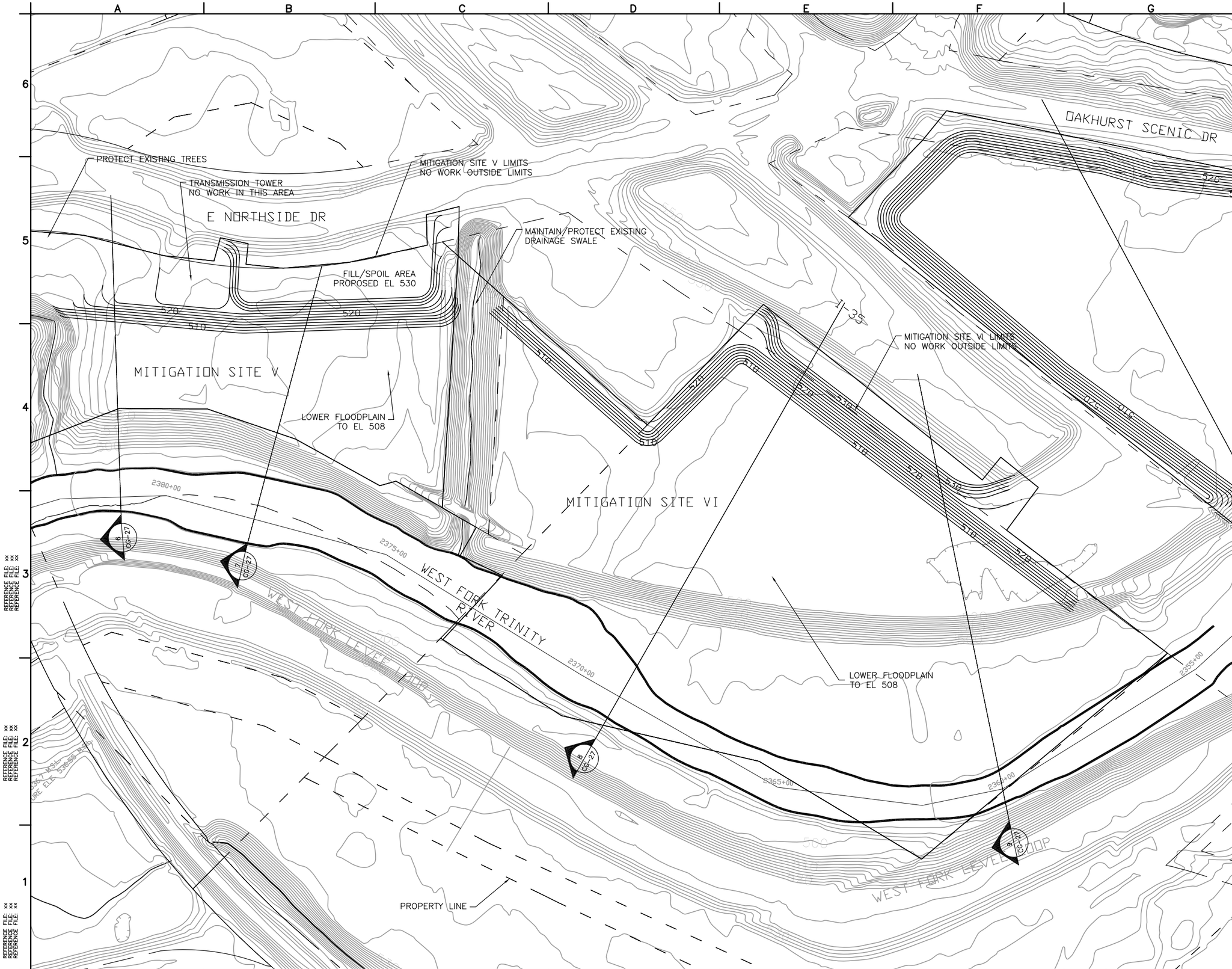


100' 50' 0 100'

SCALE: 1''= 200'-0"
HALF SIZE PRINT

NOTES

1. SEE DRAWING CG-25 FOR VALLEY STORAGE MITIGATION SITE III & IV GRADING
2. SEE DRAWING CU-VS-42 FOR UTILITIES

KEY PLAN
NTS

NOT FOR CONSTRUCTION

THIS DOCUMENT IS RELEASED FOR THE PURPOSE OF INTERIM REVIEW UNDER THE AUTHORITY OF DONALD R FUNDERLIC TEXAS NO: 61169 ON DATE: 01/13/2005 IT IS NOT TO BE USED FOR CONSTRUCTION, BIDDING OR PERMIT PURPOSES.

US Army Corps of Engineers
Fort Worth District

| Symbol | Description | D.O. NO. | Action | Date |
|---|---|---|---|---|
| | | xx | xx | xx |

TARRANT REGIONAL WATER DISTRICT

CDM

Designed by: D. FUNDERLIC
Dwn by: J. PRANGE
Reviewed by: M. OLESON
Submitted by: NAME TITLE
Date: JANUARY 2005
Sol No. XXXXXX
Contr No. XXXXXX
File name: XXXXX
Plot date: XXXXX
Plot scale: XXXXXX

FORT WORTH CENTRAL CITY
PRELIMINARY DESIGN

**VALLEY STORAGE MITIGATION GRADING PLAN DOWNSTREAM - SITE V & VI**

SEQUENCE NO.
CG-24

Sheet 31 of 139

DESIGN FILE: DRAWING NAME

Contr No.

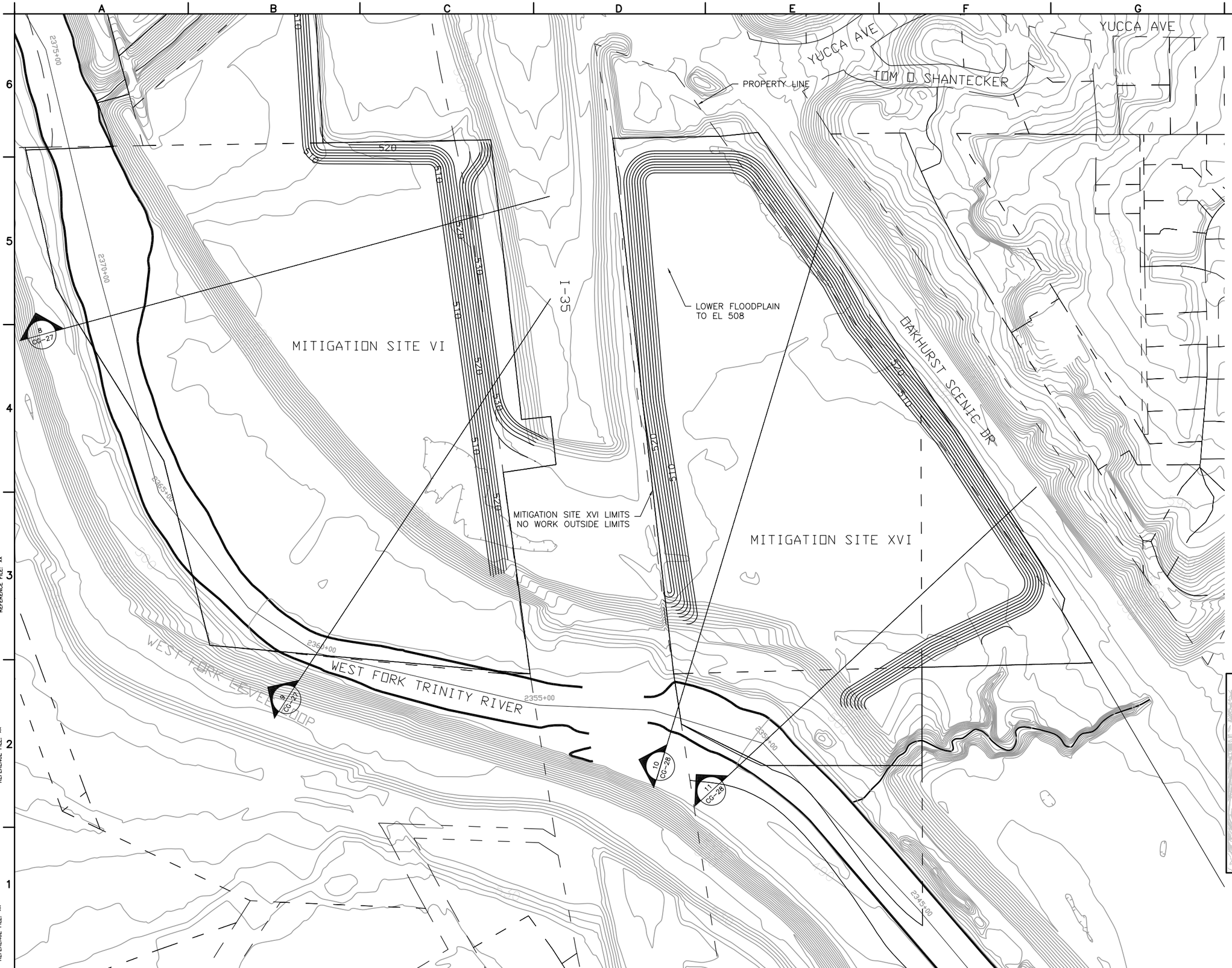


N

100' 50' 0 100'

SCALE: 1''= 200'-0"
HALF SIZE PRINT

NOTES

1. SEE DRAWING CG-24 FOR VALLEY STORAGE MITIGATION SITE V & VI GRADING
2. SEE DRAWING CU-VS-42 FOR UTILITIES

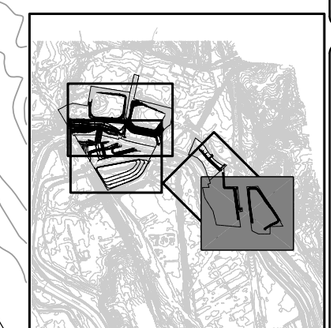

N

KEY PLAN
NTS

NOT FOR CONSTRUCTION

THIS DOCUMENT IS RELEASED FOR THE PURPOSE OF INTERIM REVIEW UNDER THE AUTHORITY OF DONALD R FUNDERLIC TEXAS NO: 61169 ON DATE: 01/13/2005 IT IS NOT TO BE USED FOR CONSTRUCTION, BIDDING OR PERMIT PURPOSES.

US Army Corps of Engineers
Fort Worth District

| Symbol | Description | D.O. NO. | Action | Date |
|---|---|---|---|---|
| | | xx | xx | xx |

Designed by: D. FUNDERLIC
Dwn by: J. PRANGE
Reviewed by: M. OLESON
Submitted by: NAME TITLE
Date: JANUARY 2005
Sol No. XXXXXX
Contr No. XXXXXX
File name: XXXXX
Plot date: XXXXX
Plot scale: XXXXXX

TARRANT REGIONAL WATER DISTRICT

CDM

FORT WORTH CENTRAL CITY
PRELIMINARY DESIGN

**VALLEY STORAGE MITIGATION GRADING PLAN DOWNSTREAM - SITE XVI**

SEQUENCE NO.
CG-25

Sheet 32 of 139

DESIGN FILE: DRAWING NAME

Contr No.

REFERENCE FILE: xx
REFERENCE FILE: xx
REFERENCE FILE: xx

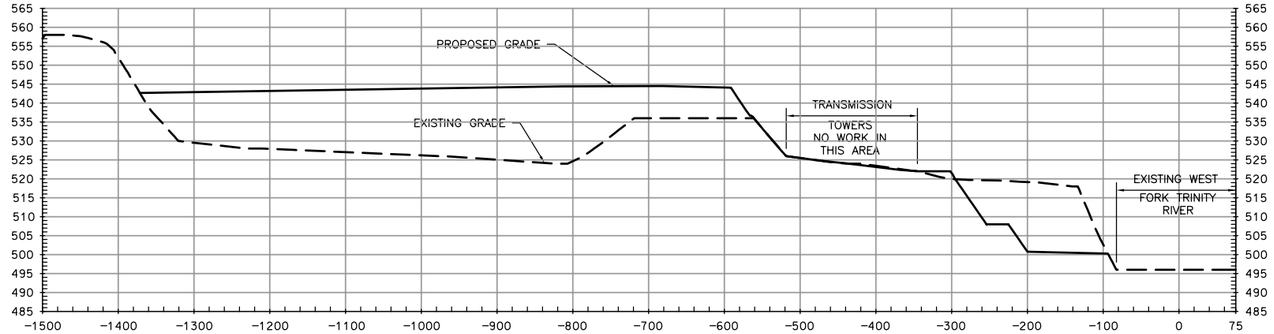


SECTION 1
NTS

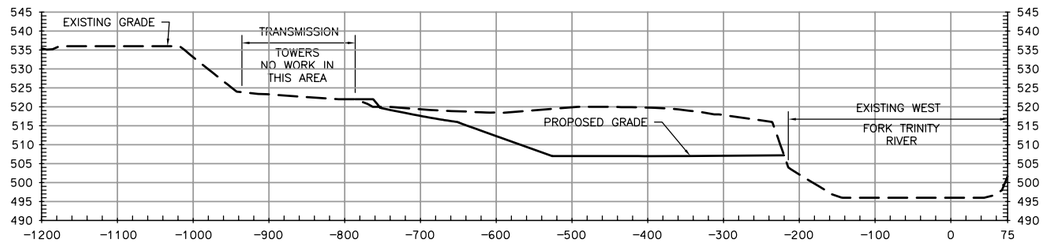


SECTION 2
NTS

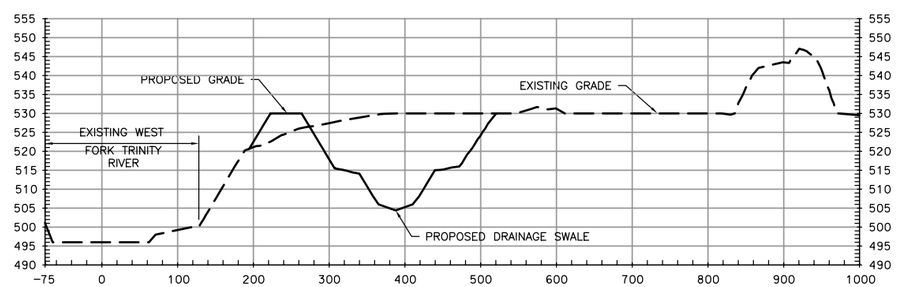


SECTION 3
NTS

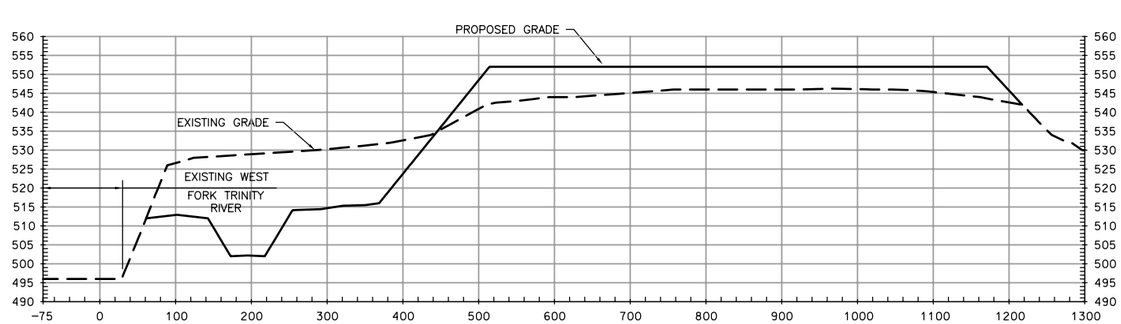


SECTION 4
NTS

SCALE
HORIZ: 1" = 100'
VERT: 1" = 20'

NOTES
1. EXISTING GRADE SHOWN WITHIN WEST FORK TRINITY RIVER LIMITS DOES NOT REFLECT ACTUAL CHANNEL BOTTOM.

US Army Corps of Engineers
Fort Worth District

| Symbol | Description | D.O. NO. | Action | Date |
|---|---|---|---|---|
| | | xx | xx | xx |

Designed by: D. FUNDERLIC
Dwn by: J. PRANGE
Reviewed by: M. OLESON
Submitted by: NAME TITLE
Date: JANUARY 2005
Sol No. XXXXXX
Contr No. XXXXXX
File name: XXXXX
Plot date: XXXXX
Plot scale: XXXXXX

TARRANT REGIONAL WATER DISTRICT

CDM

FORT WORTH CENTRAL CITY
PRELIMINARY DESIGN

**VALLEY STORAGE MTIGATION CROSS SECTIONS DOWNSTREAM SITES**

SEQUENCE NO.
CG-26
Sheet 33 of 139

NOT FOR CONSTRUCTION
THIS DOCUMENT IS RELEASED FOR THE PURPOSE OF INTERIM REVIEW UNDER THE AUTHORITY OF DONALD R FUNDERLIC TEXAS NO: 61169 ON DATE: 01/13/2005 IT IS NOT TO BE USED FOR CONSTRUCTION, BIDDING OR PERMIT PURPOSES.

DESIGN FILE: DRAWING NAME

Contr No.

REFERENCE FILE: xx
REFERENCE FILE: xx
REFERENCE FILE: xx

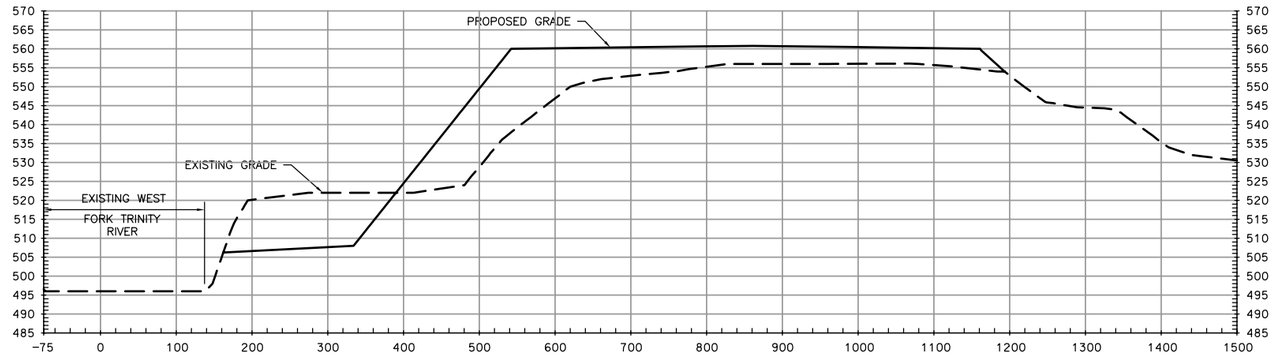


SECTION 5
NTS

SCALE
HORIZ: 1" = 100'
VERT: 1" = 20'

NOTES
1. EXISTING GRADE SHOWN WITHIN WEST FORK TRINITY RIVER LIMITS DOES NOT REFLECT ACTUAL CHANNEL BOTTOM.

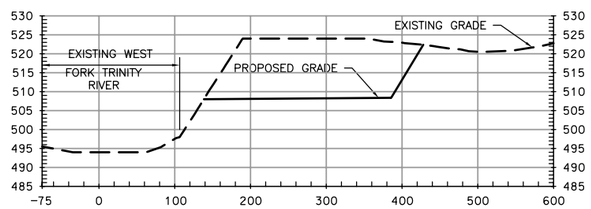


SECTION 6
NTS

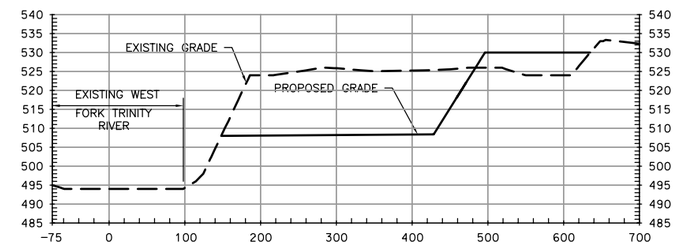


SECTION 7
NTS

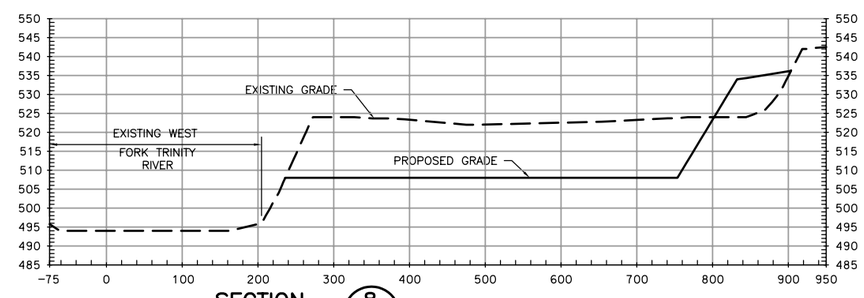


SECTION 8
NTS

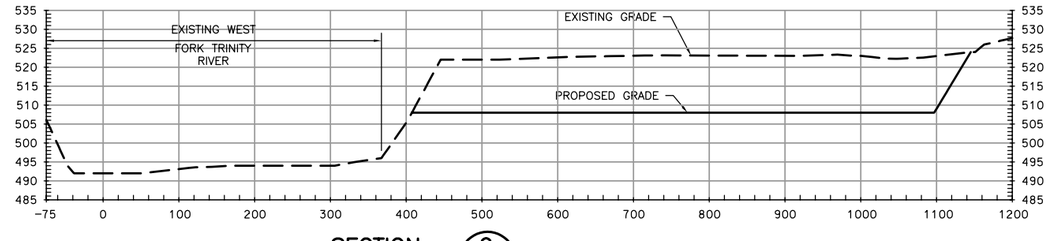


SECTION 9
NTS

NOT FOR CONSTRUCTION
THIS DOCUMENT IS RELEASED FOR THE PURPOSE OF INTERIM REVIEW UNDER THE AUTHORITY OF DONALD R FUNDERLIC TEXAS NO: 61169 ON DATE: 01/13/2005 IT IS NOT TO BE USED FOR CONSTRUCTION, BIDDING OR PERMIT PURPOSES.

US Army Corps of Engineers
Fort Worth District

| Symbol | Description | D.O. NO. | Action | Date |
|---|---|---|---|---|

Designed by: D. FUNDERLIC
Date: JANUARY 2005
Dwn by: J. PRANGE
Sol No. XXXXXX
Reviewed by: M. OLESON
Contr No. XXXXXX
Submitted by: NAME TITLE
File name: XXXXX
Plot date: XXXXXX
Plot scale: XXXXXX

TARRANT REGIONAL WATER DISTRICT
CDM

FORT WORTH CENTRAL CITY PRELIMINARY DESIGN
VALLEY STORAGE MITIGATION
CROSS SECTIONS
DOWNSTREAM SITES

SEQUENCE NO.
CG-27
Sheet 34 of 139

DESIGN FILE: DRAWING NAME
Contr No.

SCALE
HORIZ: 1" = 100'
VERT: 1" = 20'

NOTES
1. EXISTING GRADE SHOWN WITHIN WEST FORK TRINITY RIVER LIMITS DOES NOT REFLECT ACTUAL CHANNEL BOTTOM.

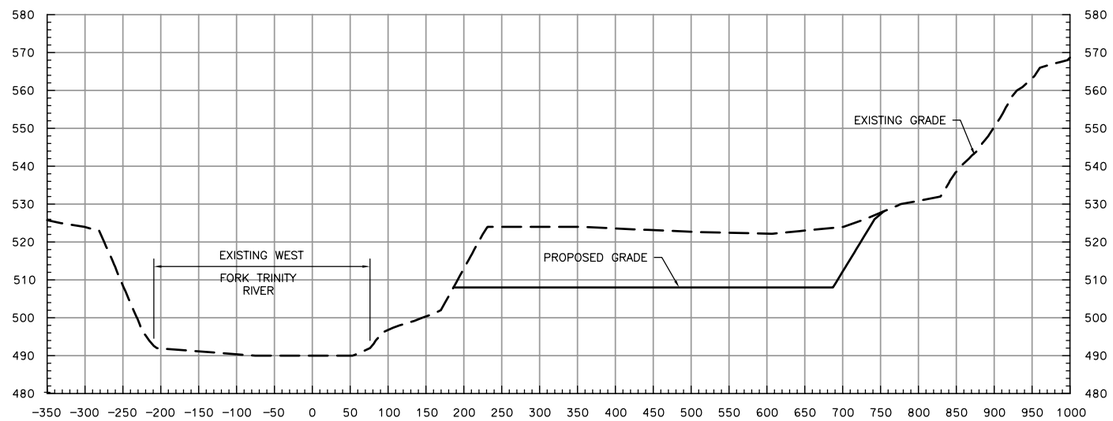


SECTION 10
NTS

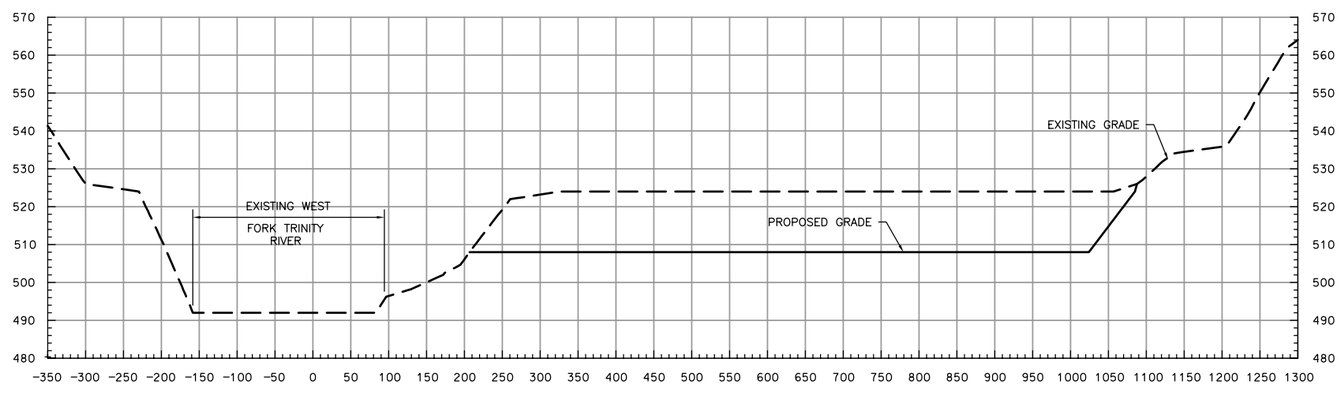


SECTION 11
NTS

NOT FOR CONSTRUCTION
THIS DOCUMENT IS RELEASED FOR THE PURPOSE OF INTERIM REVIEW UNDER THE AUTHORITY OF DONALD R FUNDERLIC TEXAS NO: 61169 ON DATE: 01/13/2005 IT IS NOT TO BE USED FOR CONSTRUCTION, BIDDING OR PERMIT PURPOSES.

US Army Corps of Engineers
Fort Worth District

| Symbol | Description | D.O. NO. | Action | Date |
|---|---|---|---|---|
| | | | | |

TARRANT REGIONAL WATER DISTRICT

CDM

Designed by: D. FUNDERLIC
Dwn by: J. PRANGE
Reviewed by: M. OLESON
Submitted by:
NAME
TITLE

Date: JANUARY 2005
Sol No. XXXXXX
Contr No. XXXXXX
File name: XXXXX
Plot date: XXXXXX
Plot scale: XXXXXX

FORT WORTH CENTRAL CITY
PRELIMINARY DESIGN

VALLEY STORAGE MITIGATION
CROSS SECTIONS
DOWNSTREAM SITES

SEQUENCE NO.
CG-28



DESIGN FILE: DRAWING NAME

Contr No.

REFERENCE FILE: XX
REFERENCE FILE: XX
REFERENCE FILE: XX

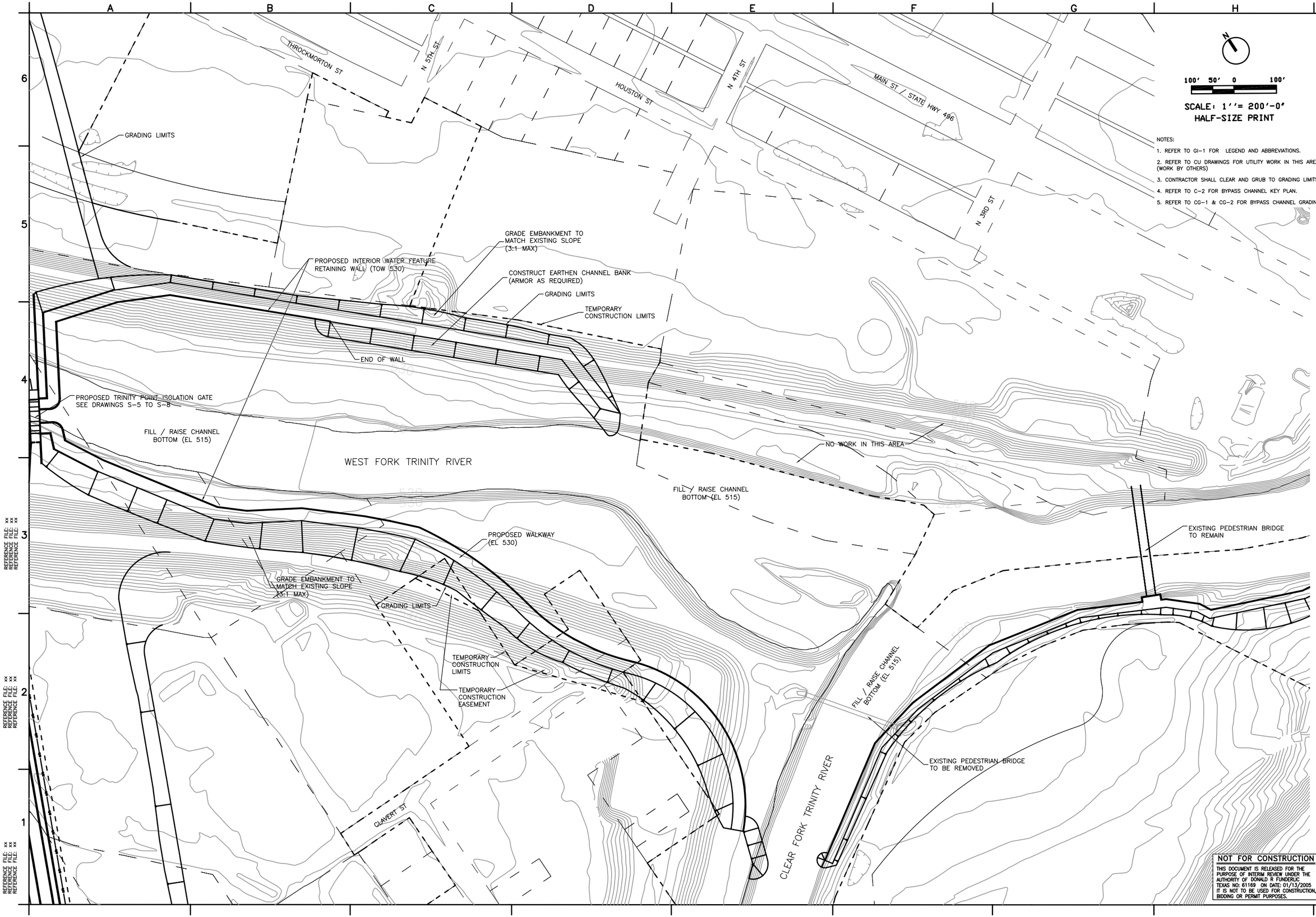


100' 50' 0 100'

SCALE: 1''= 200'-0"
HALF-SIZE PRINT

NOTES:

1. REFER TO GI-1 FOR LEGEND AND ABBREVIATIONS.
2. REFER TO CU DRAWINGS FOR UTILITY WORK IN THIS AREA. (WORK BY OTHERS)
3. CONTRACTOR SHALL CLEAR AND GRUB TO GRADING LIMITS.
4. REFER TO C-2 FOR BYPASS CHANNEL KEY PLAN.
5. REFER TO CG-1 & CG-2 FOR BYPASS CHANNEL GRADING.

US Army Corps of Engineers
Fort Worth District

| Symbol | Description | D.O. NO. | Action | Date |
|---|---|---|---|---|
| | | xx | xx | xx |

Designed by: D. FUNDERLIC
Dwn by: J. PRANGE
Reviewed by: M. OLESON
Submitted by: NAME TITLE

Date: JANUARY 2005
Sol No. XXXXXX
Contr No. XXXXXX
File name: XXXXX
Plot date: XXXXX
Plot scale: XXXXXX

TARRANT REGIONAL WATER DISTRICT

CDM

FORT WORTH CENTRAL CITY PRELIMINARY DESIGN

**BYPASS CHANNEL GRADING PLAN INTERIOR WATER FEATURE**

SEQUENCE NO.
CI-1

Sheet 36 of 139

DESIGN FILE: DRAWING NAME

Contr No.

**NOT FOR CONSTRUCTION**

THIS DOCUMENT IS RELEASED FOR THE PURPOSE OF INTERIM REVIEW UNDER THE AUTHORITY OF DONALD R FUNDERLIC TEXAS NO: 61169 ON DATE: 01/13/2005 IT IS NOT TO BE USED FOR CONSTRUCTION, BIDDING OR PERMIT PURPOSES.

REFERENCE FILE: xx
REFERENCE FILE: xx
REFERENCE FILE: xx

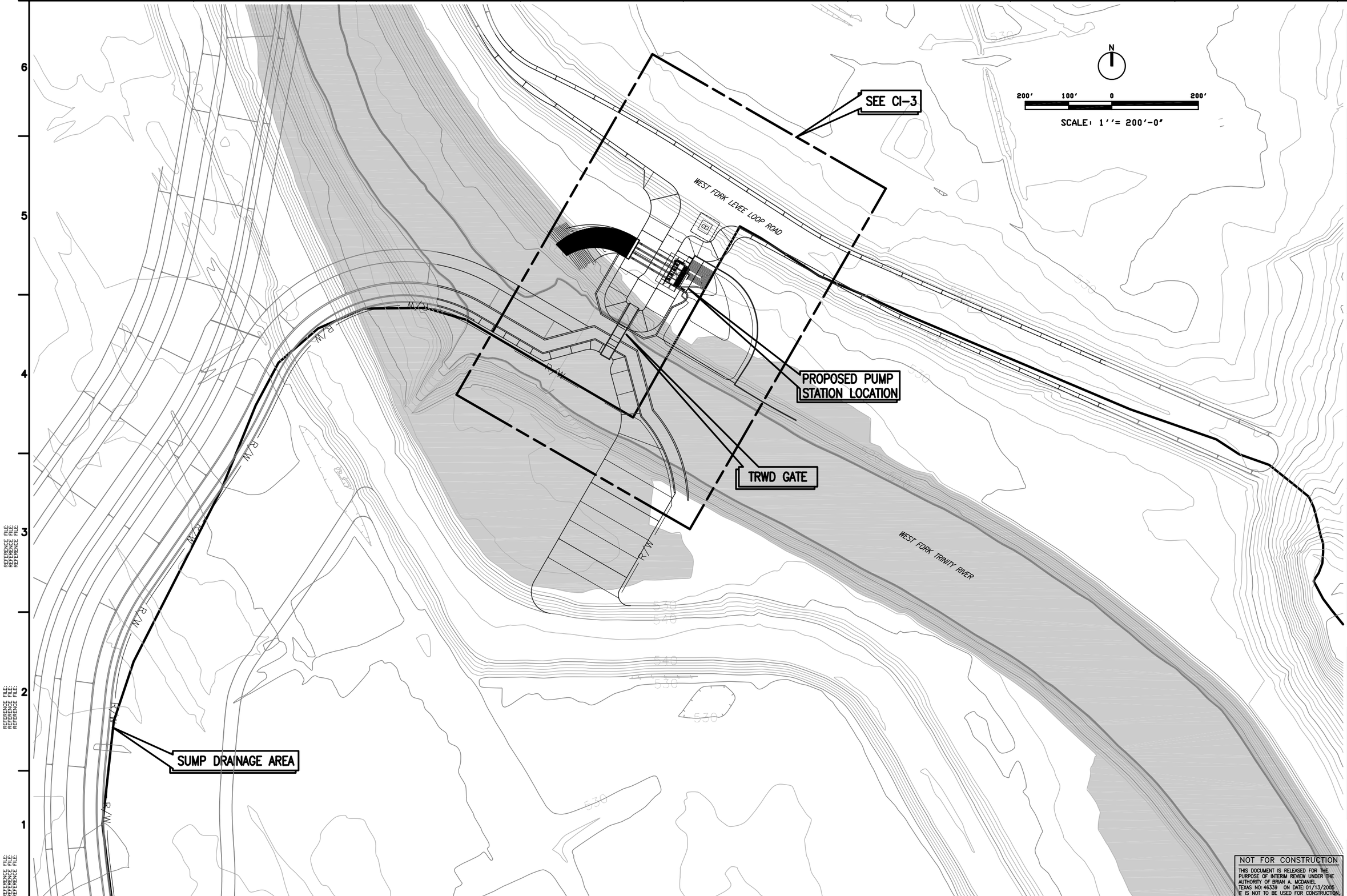


US Army Corps of Engineers
Fort Worth District

| Symbol | Description | U.O. NO. | Action | Date |
|---|---|---|---|---|
| | | xx | xx | xx |

Designed by: B. McDANIEL
Dwn by: B. LATHAM
Reviewed by: Name
Submitted by: NAME TITLE
Date: JANUARY 2005
Sol No. XXXXXX
Contr No. XXXXXX
File name: XXXXX
Plot date: XXXXX
Plot scale: XXXXXX

TARRANT REGIONAL WATER DISTRICT

CDM

FORT WORTH CENTRAL CITY PRELIMINARY DESIGN

STORM PUMP STATION GENERAL LOCATION

SEQUENCE NO.
CI-2

Sheet 37 of 139

NOT FOR CONSTRUCTION
THIS DOCUMENT IS RELEASED FOR THE PURPOSE OF INTERIM REVIEW UNDER THE AUTHORITY OF BRIAN A. MCDANIEL TEXAS NO: 46339 ON DATE: 01/13/2005 IT IS NOT TO BE USED FOR CONSTRUCTION, BIDDING OR PERMIT PURPOSES.

DESIGN FILE: CI102037.dwg

Contr No.

REFERENCE FILE:
REFERENCE FILE:
REFERENCE FILE:

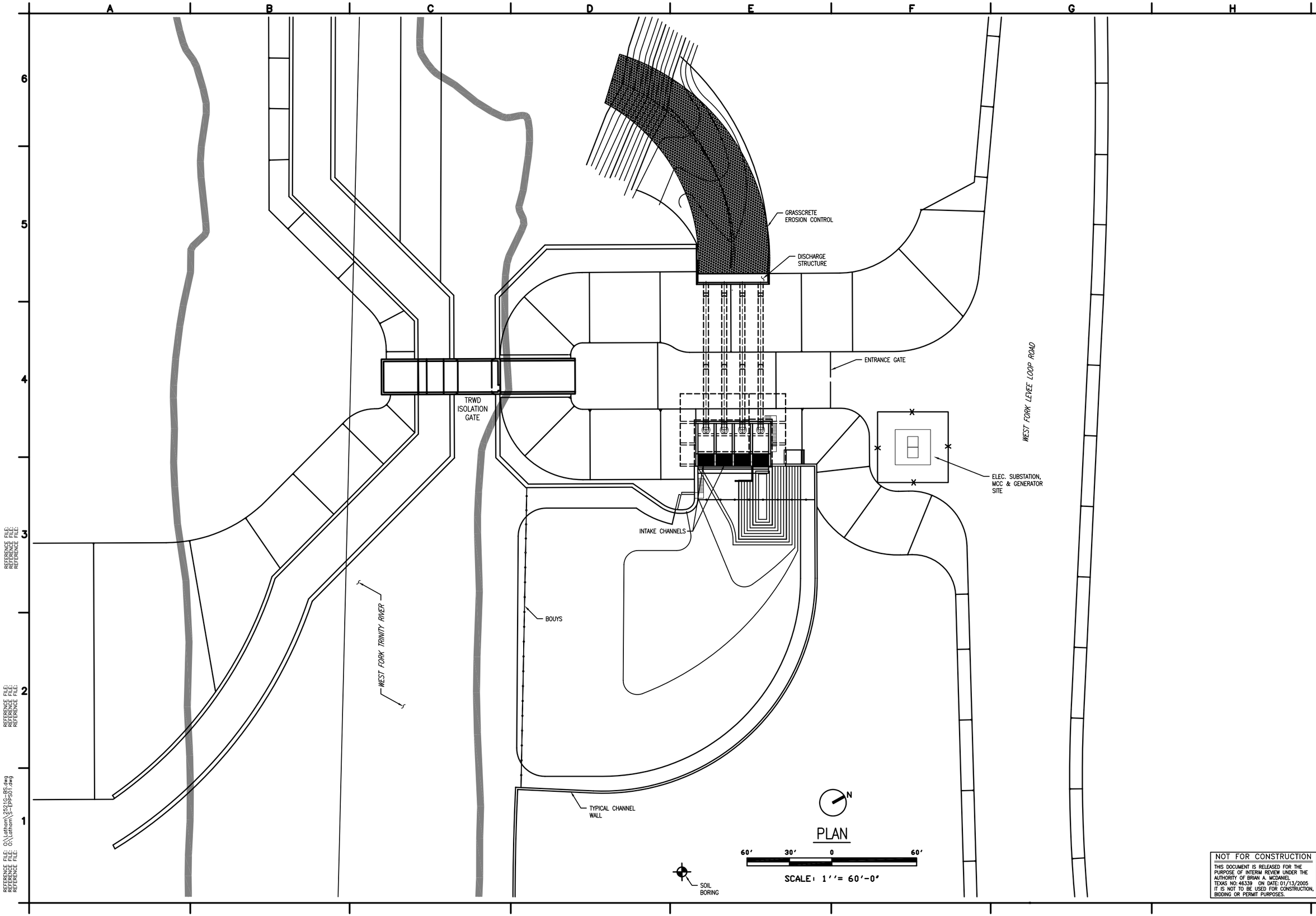


US Army Corps of Engineers
Fort Worth District

| Symbol | Description | Xx | U.O. NO. | Xx | Action | Xx | Date |
|---|---|---|---|---|---|---|---|

TARRANT REGIONAL WATER DISTRICT

CDM

Designed by: B. McDANIEL
Dwn by: B. LATHAM
Reviewed by: D. FUNDERLIC
Submitted by: NAME TITLE

Date: JANUARY 2005
Sol No. XXXXXX
Contr No. XXXXXX
File name: XXXXX
Plot date: XXXXX
Plot scale: XXXXXX

DESIGN FILE: C1103038.DWG

FORT WORTH CENTRAL CITY PRELIMINARY DESIGN

STORM PUMP STATION SITE PLAN

NOT FOR CONSTRUCTION

THIS DOCUMENT IS RELEASED FOR THE PURPOSE OF INTERIM REVIEW UNDER THE AUTHORITY OF BRIAN A. MCDANIEL TEXAS NO: 46339 ON DATE: 01/13/2005 IT IS NOT TO BE USED FOR CONSTRUCTION, BIDDING OR PERMIT PURPOSES.

SEQUENCE NO.
CI-3

Sheet 38 of 139

Contr No.

REFERENCE FILE: O:\Latham\2521G-BS.dwg
REFERENCE FILE: O:\Latham\S-EPPS01.dwg
REFERENCE FILE:
REFERENCE FILE:
REFERENCE FILE:
REFERENCE FILE:
REFERENCE FILE:

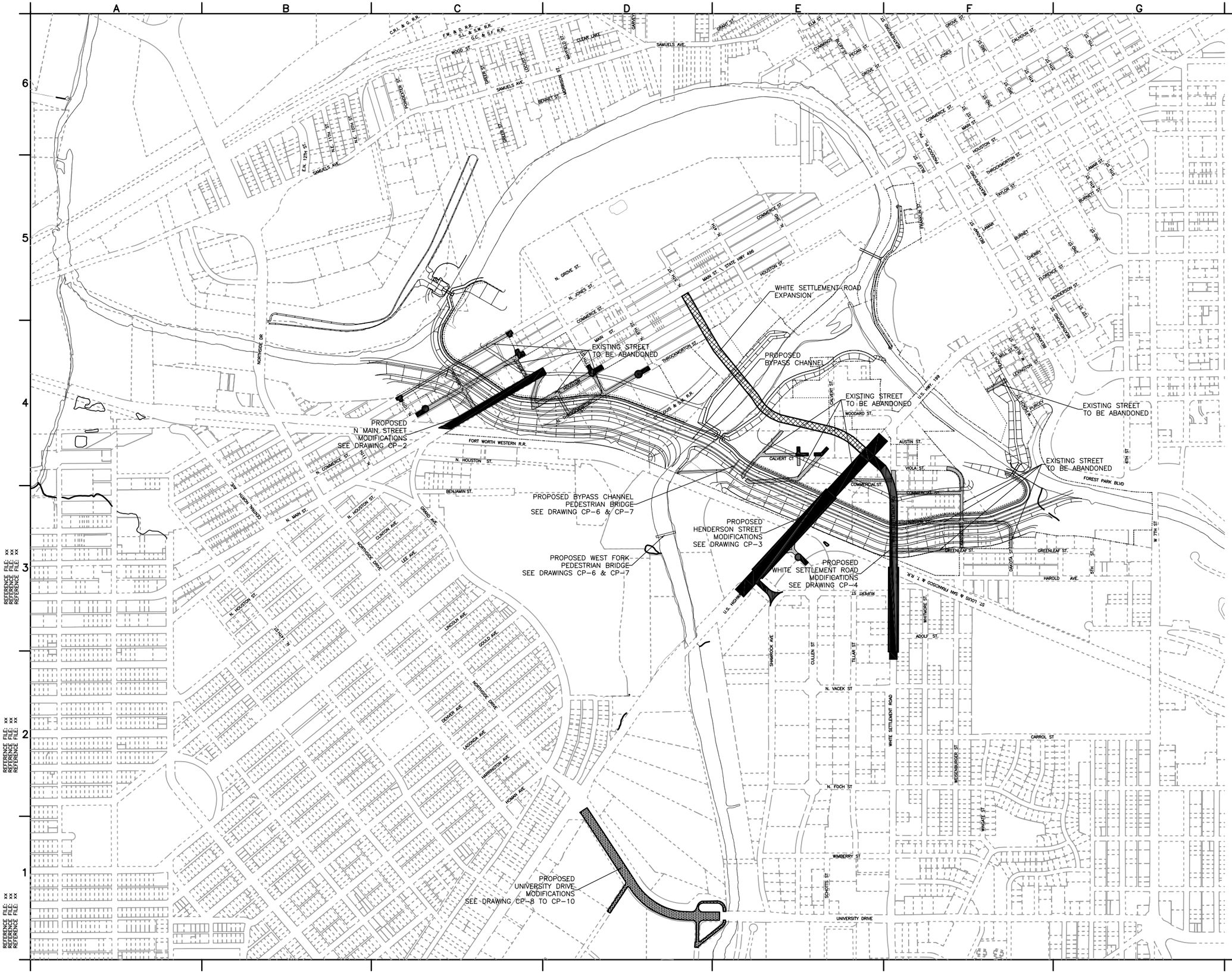


REFERENCE FILE: xx
REFERENCE FILE: xx
REFERENCE FILE: xx
REFERENCE FILE: xx

NOTES:

1. REFER TO SITE CU DRAWINGS FOR UTILITY INFORMATION

LEGEND

- PROPOSED ROADWAY DEMOLITION / ABANDONMENT
- PROPOSED ROADWAY RECONSTRUCTION
- PROPOSED ROADWAY EXTENSION

N

500 250 0 500

SCALE: 1"= 1000'-0"
HALF-SIZE PRINT

US Army Corps of Engineers
Fort Worth District

| Symbol | Description | Yr | W.O. NO. | Yr | Action | Yr | Date |
|---|---|---|---|---|---|---|---|

DESIGN FILE: DRAWING NAME

Date: JANUARY 2005
Sol No. XXXXXX
Contr No. XXXXXX
File name: XXXXX
Plot date: XXXXX
Plot scale: XXXXXX

Designed by: Name
Dwn by: Name
Reviewed by: Name
Submitted by: NAME TITLE

TARRANT REGIONAL WATER DISTRICT

CDM

FORT WORTH CENTRAL CITY PRELIMINARY DESIGN

# TRANSPORTATION SITE PLAN

SEQUENCE NO.

CP-1

Sheet 39 of 139

**NOT FOR CONSTRUCTION**

THIS DOCUMENT IS RELEASED FOR THE PURPOSE OF INTERIM REVIEW UNDER THE AUTHORITY OF DONALD R FUNDERLIC TEXAS NO: 61169 ON DATE: 01/13/2005 IT IS NOT TO BE USED FOR CONSTRUCTION, BIDDING OR PERMIT PURPOSES.

Contr No.

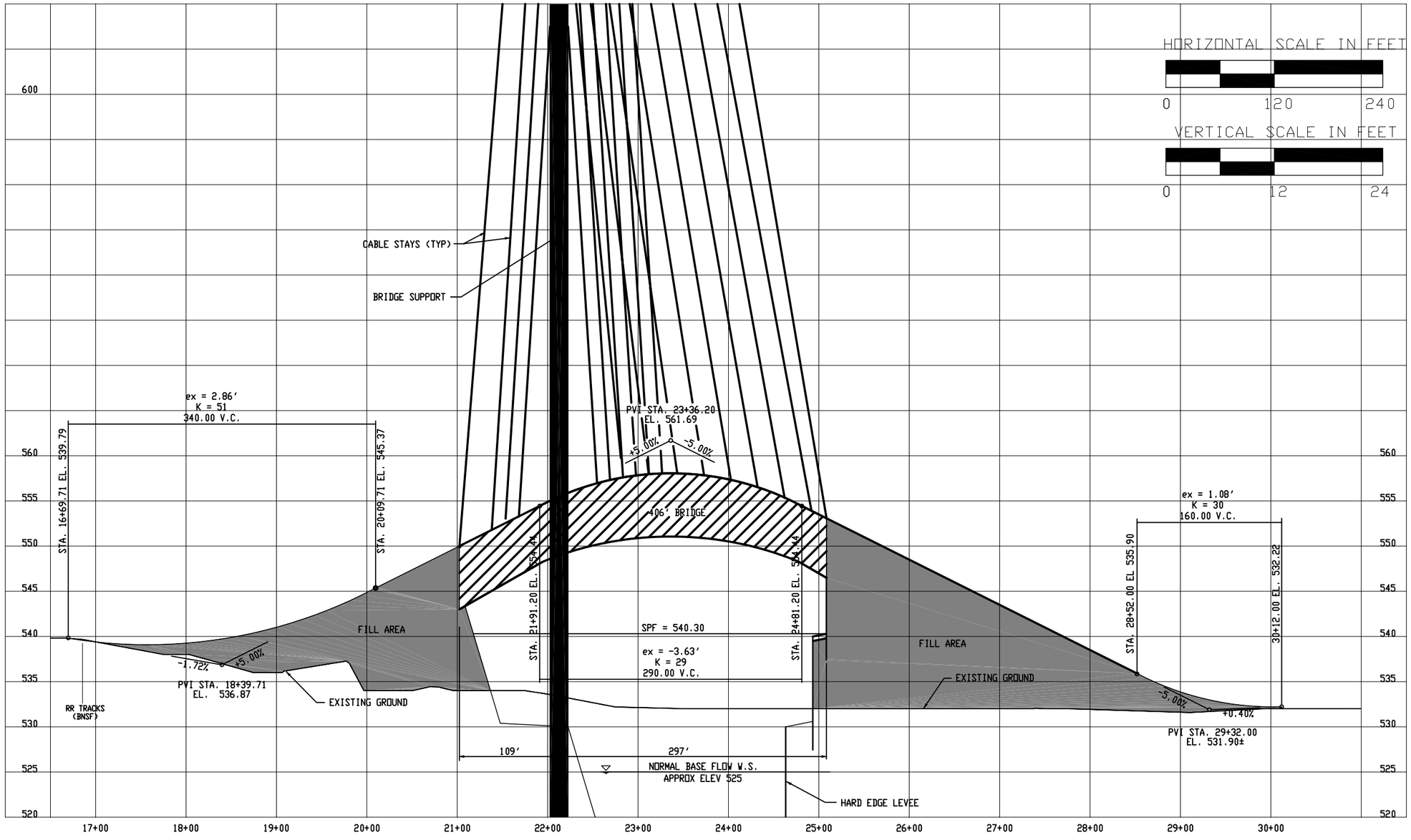


US Army Corps of Engineers
Fort Worth District

| Symbol | Description | D.O. No. | Action | Date |
|---|---|---|---|---|

Designed by: TCB
Dwn by: TCB
Reviewed by: TCB
Submitted by:
Date: JANUARY 2005
Sol No.
Contr No.
File name:
Plot date:
Plot scale:

TARRANT REGIONAL WATER DISTRICT

CDM TCB

FORT WORTH CENTRAL CITY PRELIMINARY DESIGN

N. MAIN STREET - PROFILE

PRELIMINARY
FOR INTERIM REVIEW ONLY
Not for construction, bidding, or permit purposes.
TCB TurnerCollie&Braden Inc.
Engineers • Planners • Project Managers
Engineer STEPHEN R. JAMES
P.E. No. 63384 Date 1/06/05

SEQUENCE NO.
CP-2
Sheet 40 of 139

DESIGN FILE: CP202040.dgn

Contr No.

REFERENCE FILE:
REFERENCE FILE:
REFERENCE FILE:

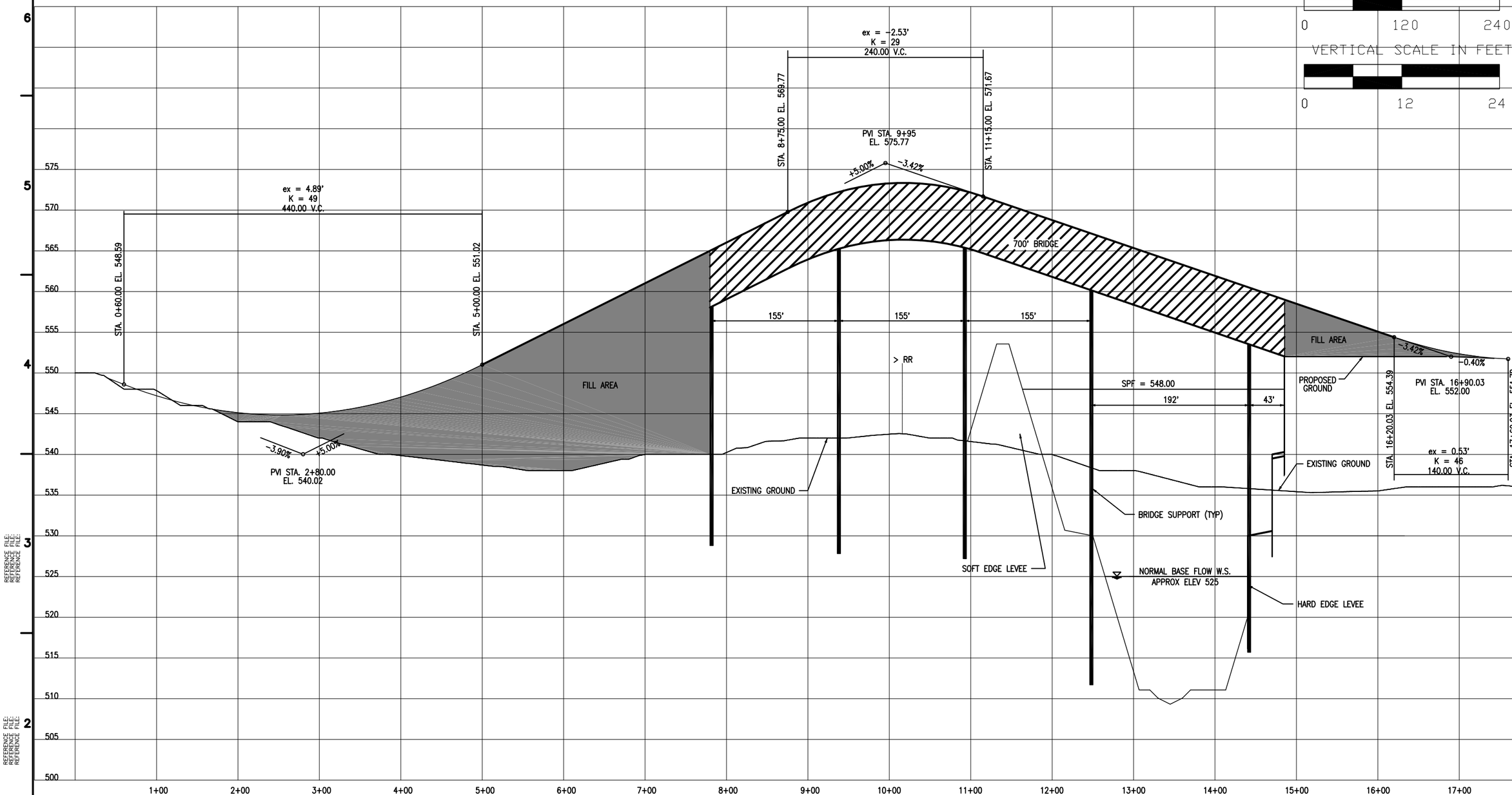


US Army Corps of Engineers
Fort Worth District

| Symbol | Description | U.O.M. NO. | Action | Date |
|---|---|---|---|---|

DESIGN FILE: CP203041.dgn

Date: JANUARY 2005
Sol No.
Contr No.
File name:
Plot date:
Plot scale:
Designed by: TCB
Dwn by: TCB
Reviewed by: TCB
Submitted by:

TARRANT REGIONAL WATER DISTRICT

TCB

CDM

FORT WORTH CENTRAL CITY
PRELIMINARY DESIGN

HENDERSON STREET - PROFILE

PRELIMINARY
FOR INTERIM REVIEW ONLY
Not for construction, bidding, or permit purposes.

TCB TurnerCollie&Braden Inc.
Engineers • Planners • Project Managers

Engineer STEPHEN R. JAMES
P.E. No. 63384 Date 1/06/05

SEQUENCE NO.
CP-3

Sheet 41 of 139

REFERENCE FILE:
REFERENCE FILE:
REFERENCE FILE:

Contr No.

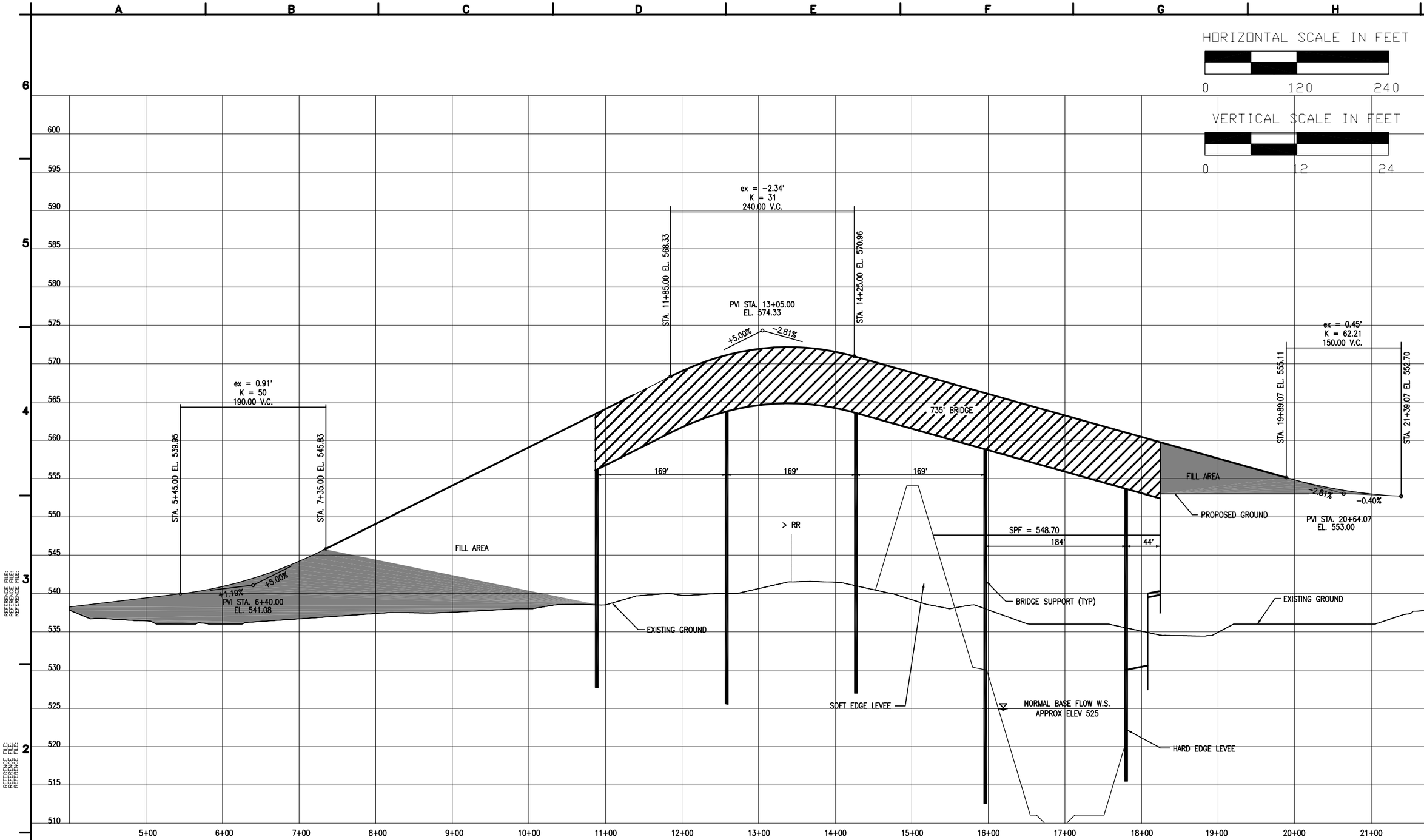


REFERENCE FILE:
REFERENCE FILE:
REFERENCE FILE:

US Army Corps of Engineers
Fort Worth District

| Symbol | Description | U.O.I. NO. | Action | Date |
|---|---|---|---|---|
| | | | | |

DESIGN FILE: CP204042.dgn

Date: JANUARY 2005
Sol No.
Contr No.
File name:
Plot date:
Plot scale:

Designed by: TCB
Dwn by: TCB
Reviewed by: TCB
Submitted by:

TARRANT REGIONAL WATER DISTRICT

TCB

CDM

FORT WORTH CENTRAL CITY
PRELIMINARY DESIGN

# WHITE SETTLEMENT ROAD PROFILE

**PRELIMINARY**
FOR INTERIM REVIEW ONLY
Not for construction, bidding, or permit purposes.

TCB Turner Collie & Braden Inc.
Engineers • Planners • Project Managers

Engineer STEPHEN R. JAMES
P.E. No. 63384 Date 1/06/05

SEQUENCE NO.
CP-4

Sheet 42 of 139

Contr No.

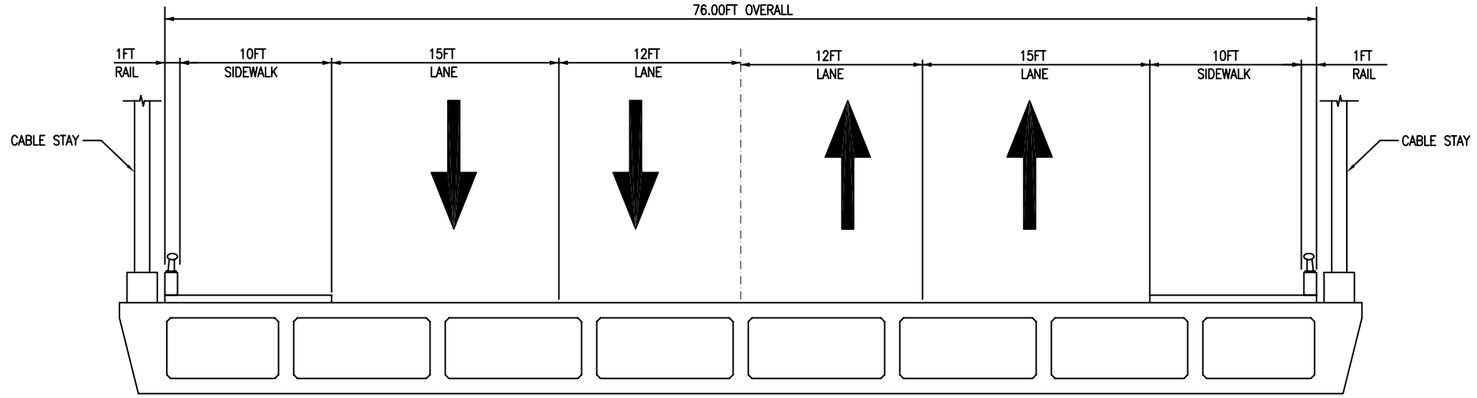


NORTH MAIN
MAJOR ARTERIAL

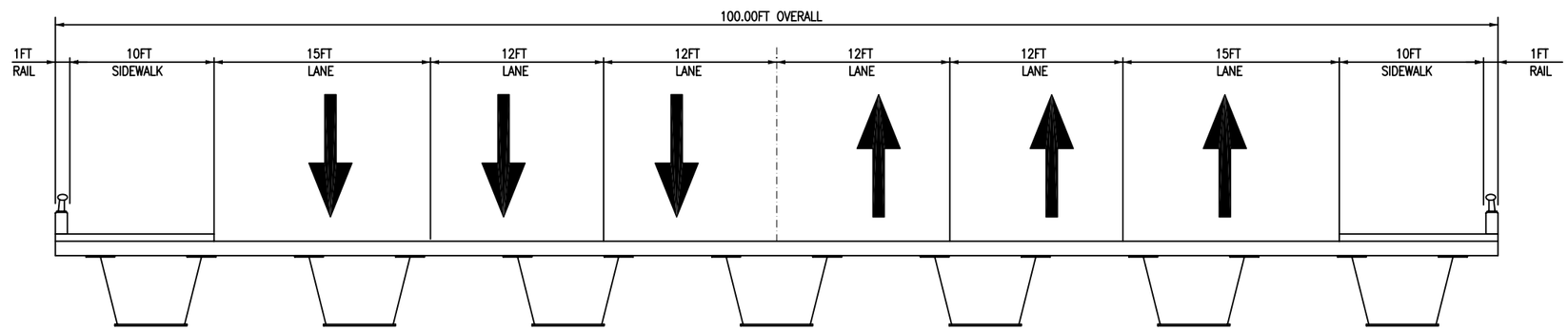


HENDERSON
PRINCIPAL ARTERIAL

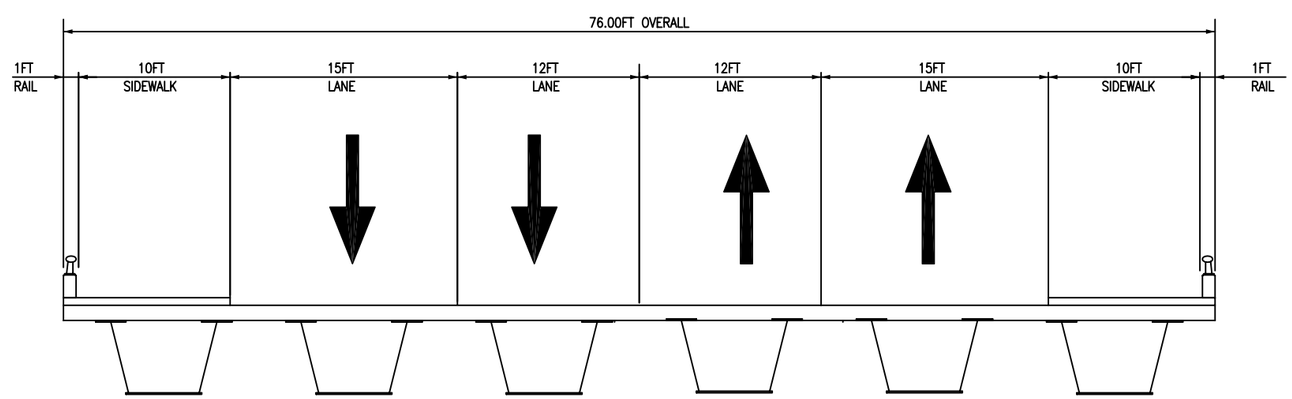


WHITE SETTLEMENT
MINOR ARTERIAL

US Army Corps of Engineers
Fort Worth District

| Symbol | Description | D.O. NO. | Action | Date |
|---|---|---|---|---|

Designed by: TCB
Dwn by: TCB
Reviewed by: TCB
Submitted by:
Date: JANUARY 2005
Sol No.
Contr No.
File name:
Plot date:
Plot scale:

TARRANT REGIONAL WATER DISTRICT

CDM TCB

FORT WORTH CENTRAL CITY PRELIMINARY DESIGN

TYPICAL BRIDGE SECTIONS

PRELIMINARY
FOR INTERIM REVIEW ONLY
Not for construction, bidding, or permit purposes.
TCB TurnerCollie&Braden Inc.
Engineers • Planners • Project Managers
Engineer STEPHEN R. JAMES
P.E. No. 63384 Date 1/06/05

SEQUENCE NO.
CP-5
Sheet 43 of 139

DESIGN FILE: CP305043.dgn

Contr No.

REFERENCE FILE:
REFERENCE FILE:
REFERENCE FILE:

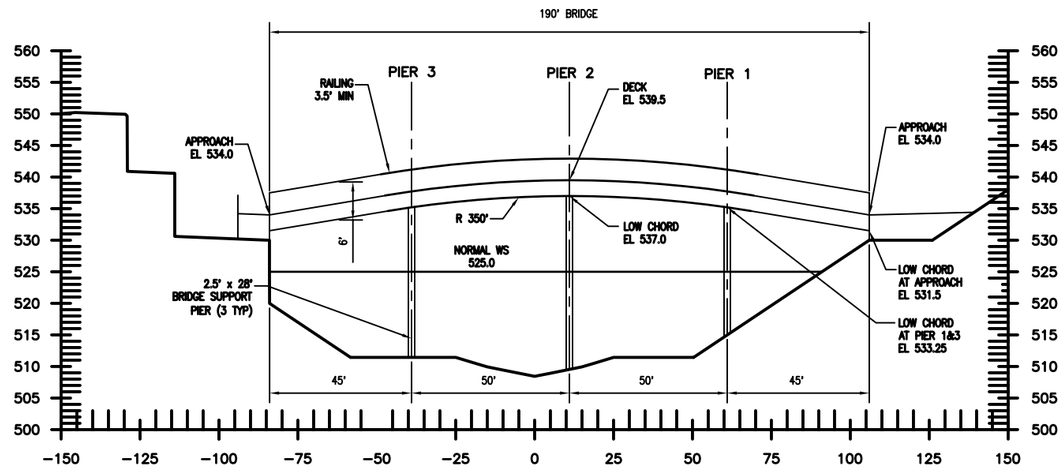


BYPASS CHANNEL – PEDESTRIAN BRIDGE

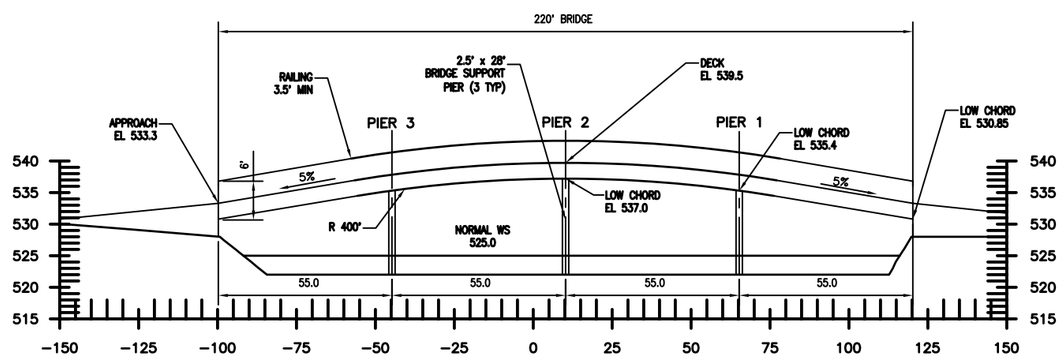


WEST FORK – PEDESTRIAN BRIDGE

VERTICAL SCALE: 1/2" = 1'-0"

HORIZONTAL SCALE: 1" = 1'

HALF SIZE PRINT

NOT FOR CONSTRUCTION

THIS DOCUMENT IS RELEASED FOR THE PURPOSE OF INTERIM REVIEW UNDER THE AUTHORITY OF WILLIAM C. SHERMAN TEXAS NO: 68207 ON DATE: 01/05/05 IT IS NOT TO BE USED FOR CONSTRUCTION, BIDDING OR PERMIT PURPOSES.

US Army Corps of Engineers
Fort Worth District

| Symbol | Description | D.O. NO. | Action | Date |
|---|---|---|---|---|
| | | xx | xx | xx |

TARRANT REGIONAL WATER DISTRICT

CDM

Designed by: Name CDM
Dwn by: Name CDM
Reviewed by: Name M. OLESON
Submitted by: NAME D. FUNDERLIC TITLE CIVIL ENGINEER
Date: JANUARY 2005
Sol No. XXXXXX
Contr No. XXXXXX
File name: XXXXX
Plot date: XXXXX
Plot scale: XXXXXX

FORT WORTH CENTRAL CITY PRELIMINARY DESIGN

PEDESTRIAN BRIDGE PROFILES

SEQUENCE NO.
CP-6

Sheet 44 of 139

DESIGN FILE: CP-6.DWG

Contract No. 2521\42275\STRU\gs\dwgs\CP-6 01/05/05 14:33 ginzburgm XREFS: 2521G-BS

REFERENCE FILE: xx
REFERENCE FILE: xx
REFERENCE FILE: xx

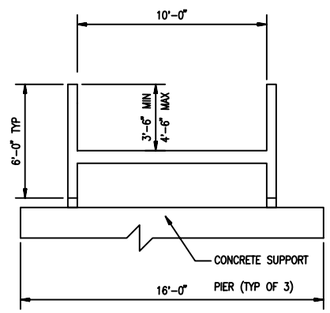


## SECTION AT PEDESTRIAN BRIDGE AT BYPASS CHANNEL

1/4" = 1'-0"

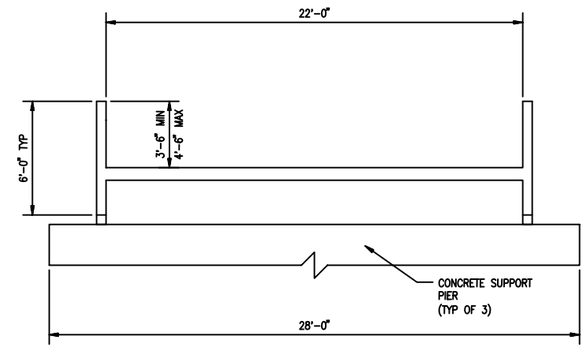


## SECTION AT PEDESTRIAN BRIDGE AT WEST FORK TRINITY RIVER

1/4" = 1'-0"

4' 2' 0 4'

SCALE: 1/4" = 1'-0"

HALF SIZE PRINT

US Army Corps of Engineers
Fort Worth District

| Symbol | Description | D.O. NO. | Action | Date |
|---|---|---|---|---|
| | | xx | xx | xx |

TARRANT REGIONAL WATER DISTRICT

CDM

Designed by: Name CDM
Date: JANUARY 2005
Dwn by: Name CDM
Sol No. XXXXXX
Reviewed by: Name W. SHERMAN
Contr No. XXXXXX
Submitted by: NAME D. FUNDERLIC TITLE CIVIL ENGINEER
File name: XXXXX
Plot date: XXXXXX
Plot scale: XXXXXX

FORT WORTH CENTRAL CITY PRELIMINARY DESIGN

**PEDESTRIAN BRIDGE SECTIONS**

SEQUENCE NO.

CP-7

Sheet 45 of 139

DESIGN FILE: CP-7.DWG

REFERENCE FILE: xx
REFERENCE FILE: xx
REFERENCE FILE: xx

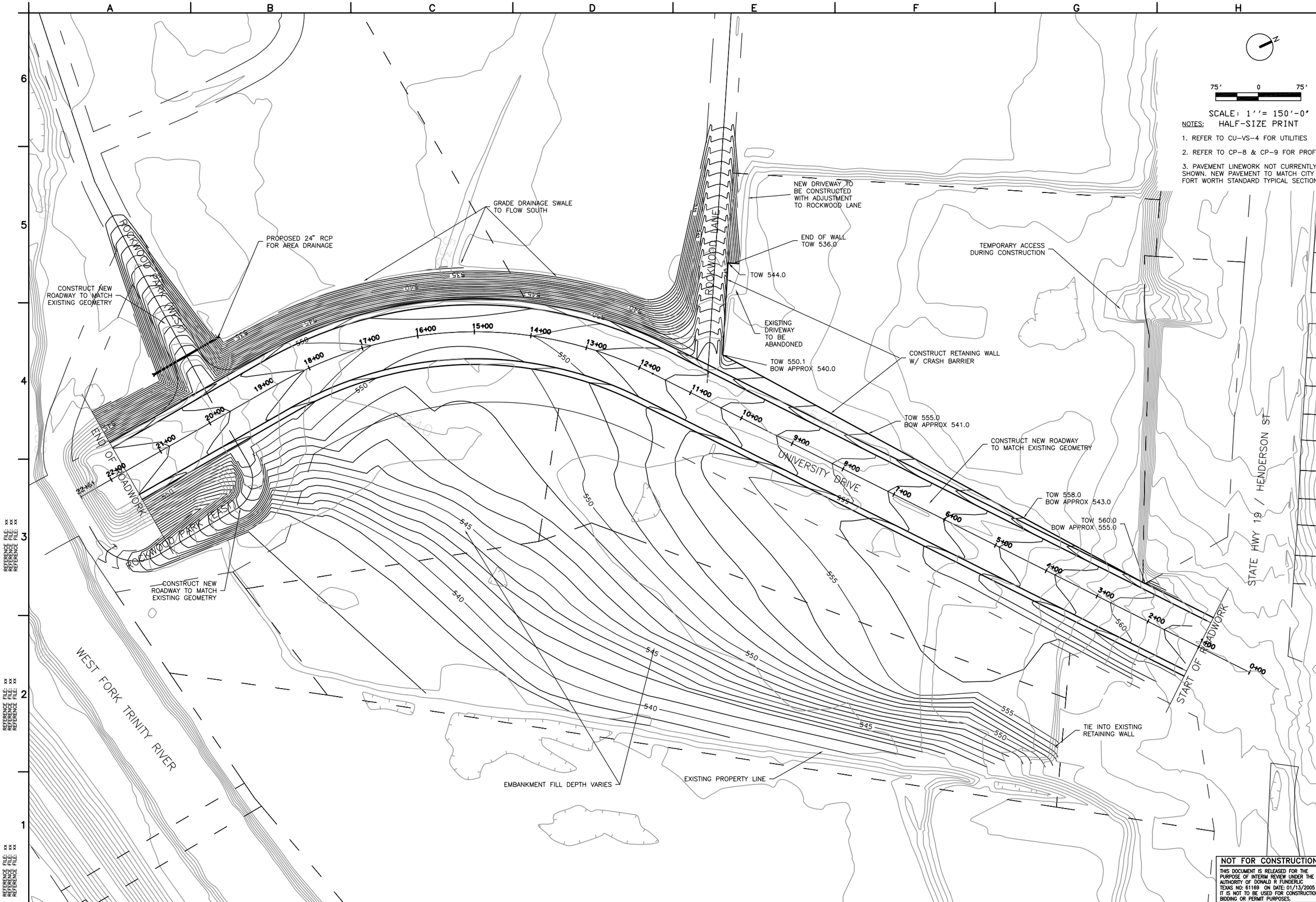


75' 0 75'

SCALE: 1''= 150'-0"

HALF-SIZE PRINT

NOTES:

1. REFER TO CU-VS-4 FOR UTILITIES
2. REFER TO CP-8 & CP-9 FOR PROFILE.
3. PAVEMENT LINEWORK NOT CURRENTLY SHOWN. NEW PAVEMENT TO MATCH CITY OF FORT WORTH STANDARD TYPICAL SECTION.

US Army Corps of Engineers
Fort Worth District

| Symbol | Description | D.O. NO. | Action | Date |
|---|---|---|---|---|
| | | xx | xx | xx |

DESIGN FILE: DRAWING NAME

Designed by: D. FUNDERLIC
Dwn by: J. PRANGE
Reviewed by: M. OLESON
Submitted by: NAME TITLE
Date: JANUARY 2005
Sol No. XXXXXX
Contr No. XXXXXX
File name: XXXXX
Plot date: XXXXX
Plot scale: XXXXXX

TARRANT REGIONAL WATER DISTRICT

CDM

FORT WORTH CENTRAL CITY PRELIMINARY DESIGN

# UNIVERSITY DRIVE GRADING PLAN

SEQUENCE NO.

CP-8

Sheet 46 of 139

NOT FOR CONSTRUCTION

THIS DOCUMENT IS RELEASED FOR THE PURPOSE OF INTERIM REVIEW UNDER THE AUTHORITY OF DONALD R FUNDERLIC TEXAS NO: 61169 ON DATE: 01/13/2005 IT IS NOT TO BE USED FOR CONSTRUCTION, BIDDING OR PERMIT PURPOSES.

REFERENCE FILE: xx
REFERENCE FILE: xx
REFERENCE FILE: xx

Contr No.

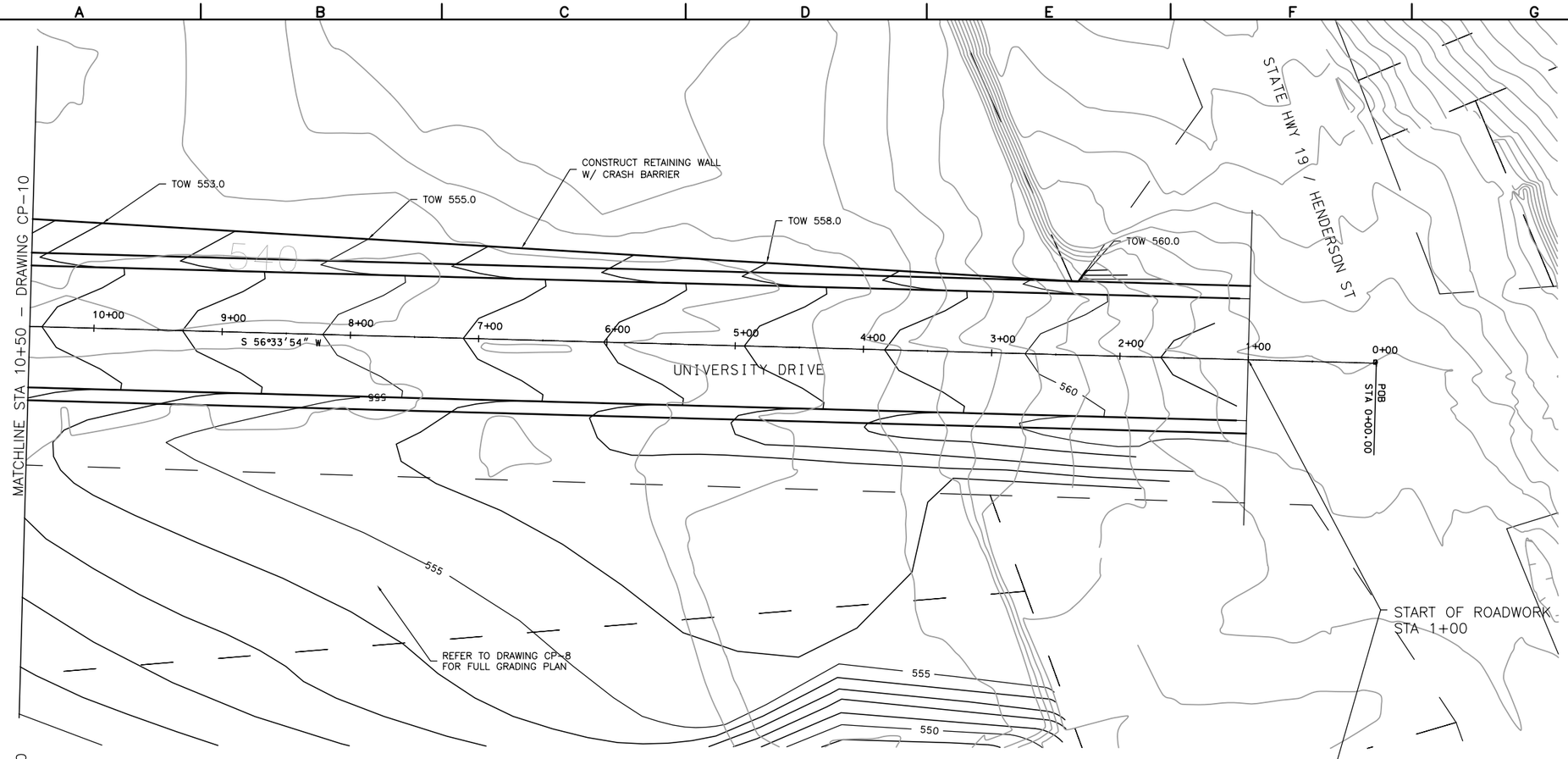


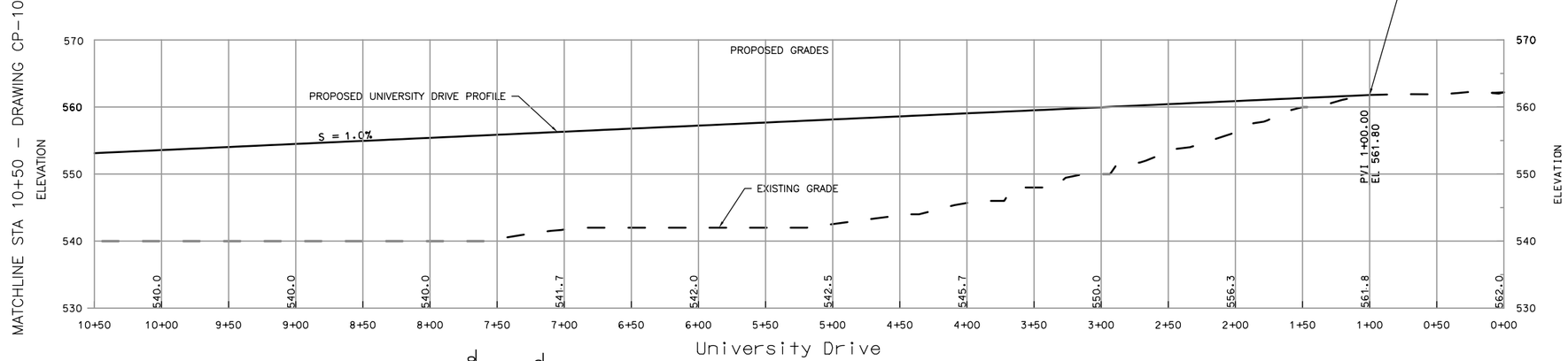


University Drive

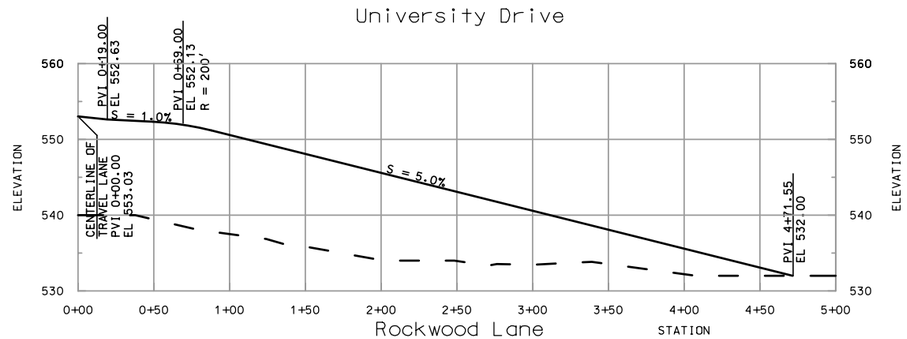


Rockwood Lane

N

50' 25' 0 50'

SCALE: 1''= 100'-0"
HALF-SIZE PRINT

NOTES:

1. REFER TO CU-VS-40 FOR UTILITIES

2. PAVEMENT LINEWORK NOT CURRENTLY SHOWN FOR CLARITY. NEW PAVEMENT TO MATCH CITY OF FORT WORTH STANDARD TYPICAL SECTION.

US Army Corps of Engineers
Fort Worth District

| Symbol | Description | U.O. NO. | Action | Date |
|---|---|---|---|---|
| | | XX | XX | XX |

Designed by: D. FUNDERLIC
Dwn by: J. PRANGE
Reviewed by: M. OLESON
Submitted by: NAME TITLE
Date: JANUARY 2005
Sol No. XXXXXX
Contr No. XXXXXX
File name: XXXXX
Plot date: XXXXX
Plot scale: XXXXXX

TARRANT REGIONAL WATER DISTRICT

CDM

FORT WORTH CENTRAL CITY PRELIMINARY DESIGN

**UNIVERSITY DRIVE PLAN AND PROFILE STA 0+00 TO STA 10+50**

SEQUENCE NO.
CP-9



DESIGN FILE: DRAWING NAME

Contr No.

NOT FOR CONSTRUCTION

THIS DOCUMENT IS RELEASED FOR THE PURPOSE OF INTERIM REVIEW UNDER THE AUTHORITY OF DONALD R FUNDERLIC TEXAS NO: 61169 ON DATE: 01/13/2005 IT IS NOT TO BE USED FOR CONSTRUCTION, BIDDING OR PERMIT PURPOSES.

REFERENCE FILE: xx
REFERENCE FILE: xx
REFERENCE FILE: xx

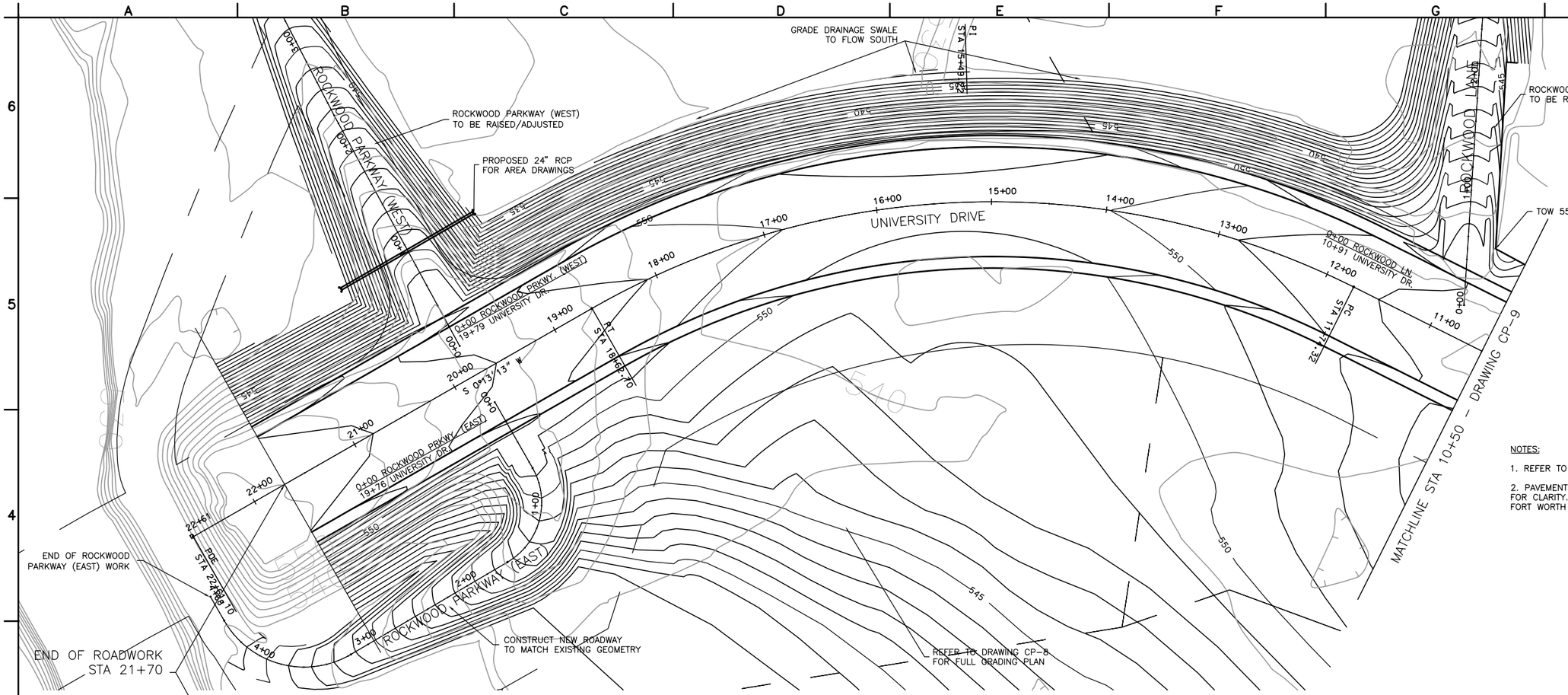


SCALE: 1''= 100'-0"
HALF-SIZE PRINT

NOTES:

1. REFER TO CU-VS-40 FOR UTILITIES.

2. PAVEMENT LIFEWORK NOT CURRENTLY SHOWN FOR CLARITY. NEW PAVEMENT TO MATCH CITY OF FORT WORTH STANDARD TYPICAL SECTION.

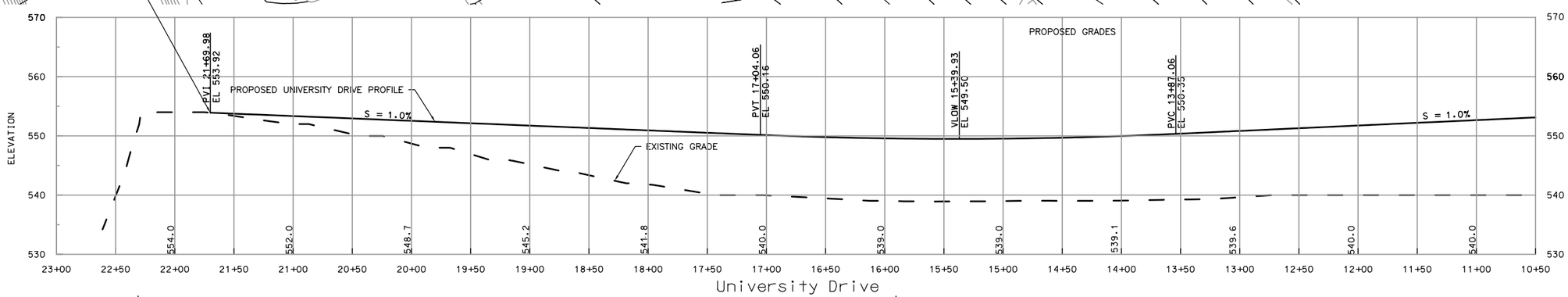


University Drive

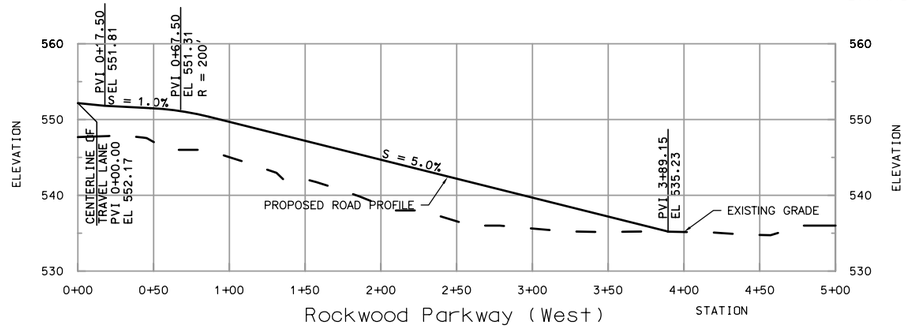


Rockwood Parkway (West)

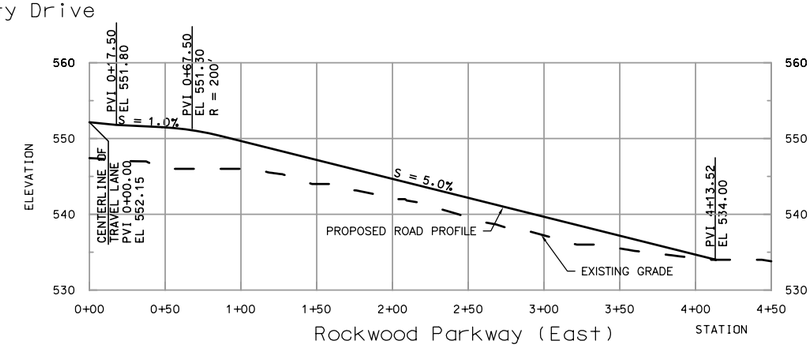


Rockwood Parkway (East)

US Army Corps of Engineers
Fort Worth District

| Symbol | Description | D.O. NO. | Action | Date |
|---|---|---|---|---|
| | | xx | xx | xx |

TARRANT REGIONAL WATER DISTRICT

CDM

Designed by: D. FUNDERLIC
Dwn by: J. PRANGE
Reviewed by: M. OLESON
Submitted by: NAME TITLE
Date: JANUARY 2005
Sol No. XXXXXX
Contr No. XXXXXX
File name: XXXXX
Plot date: XXXXX
Plot scale: XXXXXX

FORT WORTH CENTRAL CITY PRELIMINARY DESIGN

**UNIVERSITY DRIVE PLAN AND PROFILE STA 10+50 TO END STA**

SEQUENCE NO.
CP-10
Sheet 48 of 139

NOT FOR CONSTRUCTION
THIS DOCUMENT IS RELEASED FOR THE PURPOSE OF INTERIM REVIEW UNDER THE AUTHORITY OF DONALD R FUNDERLIC TEXAS NO: 61169 ON DATE: 01/13/2005 IT IS NOT TO BE USED FOR CONSTRUCTION, BIDDING OR PERMIT PURPOSES.

DESIGN FILE: DRAWING NAME

Contr No.

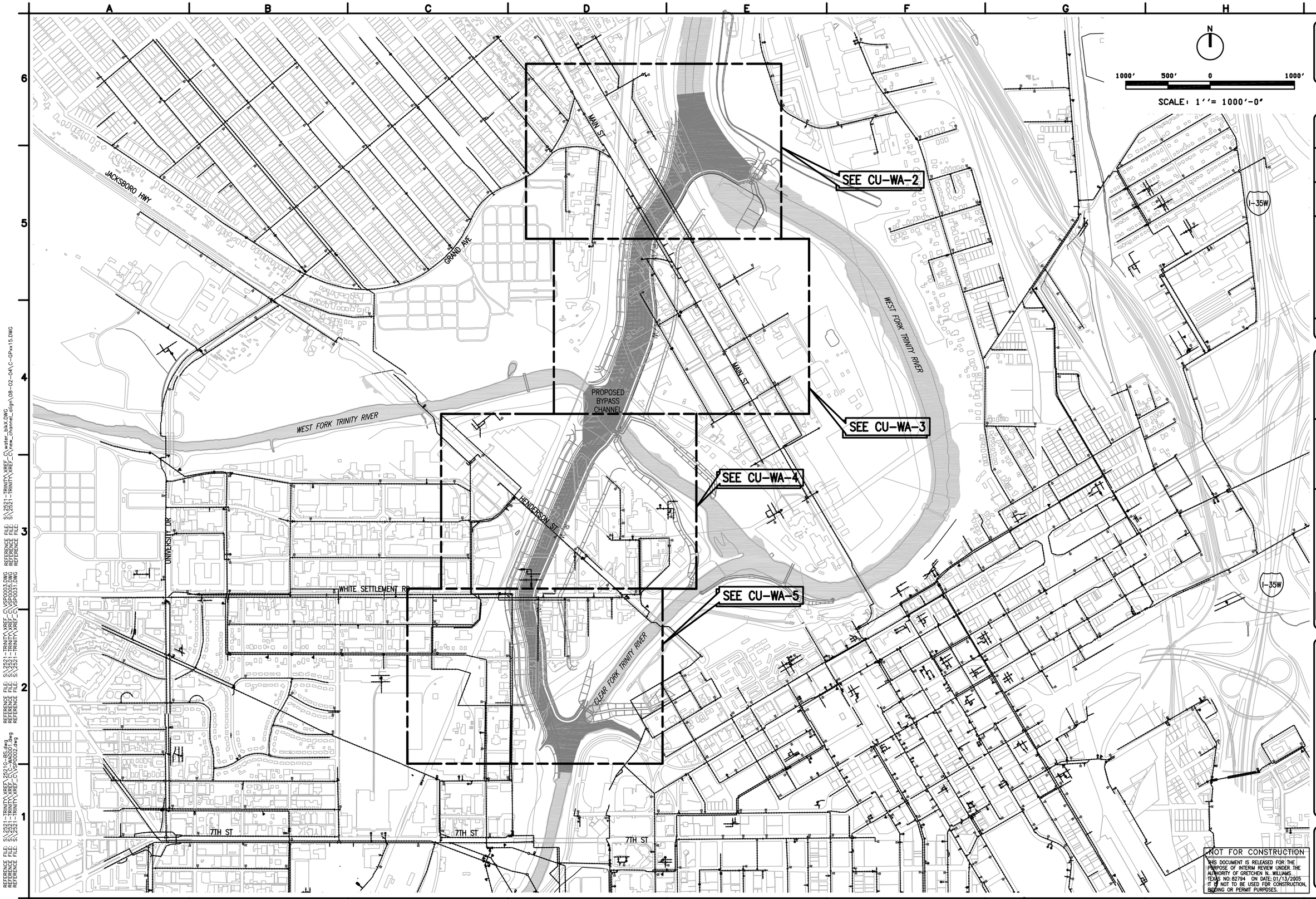


US Army Corps of Engineers
Fort Worth District

| Symbol | Description | Xx. U.O. No. | Xx. Action | Xx. Date |
|---|---|---|---|---|

Designed by: G. CHIANG
Dwn by: B. LATHAM
Reviewed by: Name
Submitted by: NAME TITLE
Date: JANUARY 2005
Sol No. XXXXXX
Contr No. XXXXXX
File name: XXXXX
Plot date: XXXXX
Plot scale: XXXXXX

TARRANT REGIONAL WATER DISTRICT

CDM

FORT WORTH CENTRAL CITY PRELIMINARY DESIGN

# OVERALL WATER PLAN

SEQUENCE NO.
CU-WA-1



NOT FOR CONSTRUCTION
THIS DOCUMENT IS RELEASED FOR THE PURPOSE OF INTERIM REVIEW UNDER THE AUTHORITY OF GRETCHEN N. WILLIAMS TEXAS NO: 82794 ON DATE: 01/13/2005 IT IS NOT TO BE USED FOR CONSTRUCTION, BIDDING OR PERMIT PURPOSES.

DESIGN FILE: CU401049.dwg

Contr No.

REFERENCE FILE: S:\2521-TRINITY\XREF_C\water_blkX.DWG
REFERENCE FILE: S:\2521-TRINITY\XREF_C\new_channel_align\08-02-04\C-GPxx15.DWG
REFERENCE FILE: S:\2521-TRINITY\XREF_C\VSP0003.DWG
REFERENCE FILE: S:\2521-TRINITY\XREF_C\VSP0005.DWG
REFERENCE FILE: S:\2521-TRINITY\XREF_C\VSP0031.DWG
REFERENCE FILE: S:\2521-TRINITY\XREF_C\VSP0002.dwg
REFERENCE FILE: S:\2521-TRINITY\XREF_C\C-WA0001.dwg
REFERENCE FILE: S:\2521-TRINITY\XREF_C\VSP0002.dwg

**LEGEND:**

| | |
|---|---|
| PROPOSED WATER LINE | W |
| EXISTING WATER LINE | $W_x$ |
| EXISTING FIRE HYDRANT | |
| CUT AND PLUG | |
| ABANDON IN PLACE | XXXXX |

NOTE:

EXISTING WATER LINES TO BE ABANDONED IN PLACE AS INDICATED. REMOVAL OF ABANDONED PIPES WILL TAKE PLACE DURING CONSTRUCTION OF NEW BYPASS CHANNEL.

NOT FOR CONSTRUCTION

THIS DOCUMENT IS RELEASED FOR THE PURPOSE OF INTERIM REVIEW UNDER THE AUTHORITY OF GRETCHEN N. WILLIAMS TEXAS NO: 82794 ON DATE: 01/13/2005 IT IS NOT TO BE USED FOR CONSTRUCTION, BIDDING OR PERMIT PURPOSES.

US Army Corps of Engineers
Fort Worth District

| Symbol | Description | Dwn | Ckd | Date |
|---|---|---|---|---|
| | | | | |

Designed by: G. CHIANG
Dwn by: B. LATHAM
Reviewed by: G. WILLIAMS
Submitted by: NAME TITLE
Date: JANUARY 2005
Sol No. XXXXXX
Contr No. XXXXXX
File name: XXXXX
Plot date: XXXXX
Plot scale: XXXXXX

TARRANT REGIONAL WATER DISTRICT

CDM

FORT WORTH CENTRAL CITY PRELIMINARY DESIGN

# WATER (POTABLE) PLAN I

SEQUENCE NO.
CU-WA-2

Sheet 50 of 139

DESIGN FILE: CU102050.dwg

Contr No.

REFERENCE FILE: S:\2521-TRINITY\XREF\2521G-BS.dwg
REFERENCE FILE: S:\2521-TRINITY\XREF_C\C-WA0001.dwg
REFERENCE FILE: S:\2521-TRINITY\XREF_C\VSP0002.dwg
REFERENCE FILE: S:\2521-TRINITY\XREF_C\VSP0003.DWG
REFERENCE FILE: S:\2521-TRINITY\XREF_C\VSP0031.DWG
REFERENCE FILE: S:\2521-TRINITY\XREF_C\water_blkX.DWG
REFERENCE FILE: S:\2521-TRINITY\XREF_C\new_channel_align\08-02-04\C-GPxx15.DWG

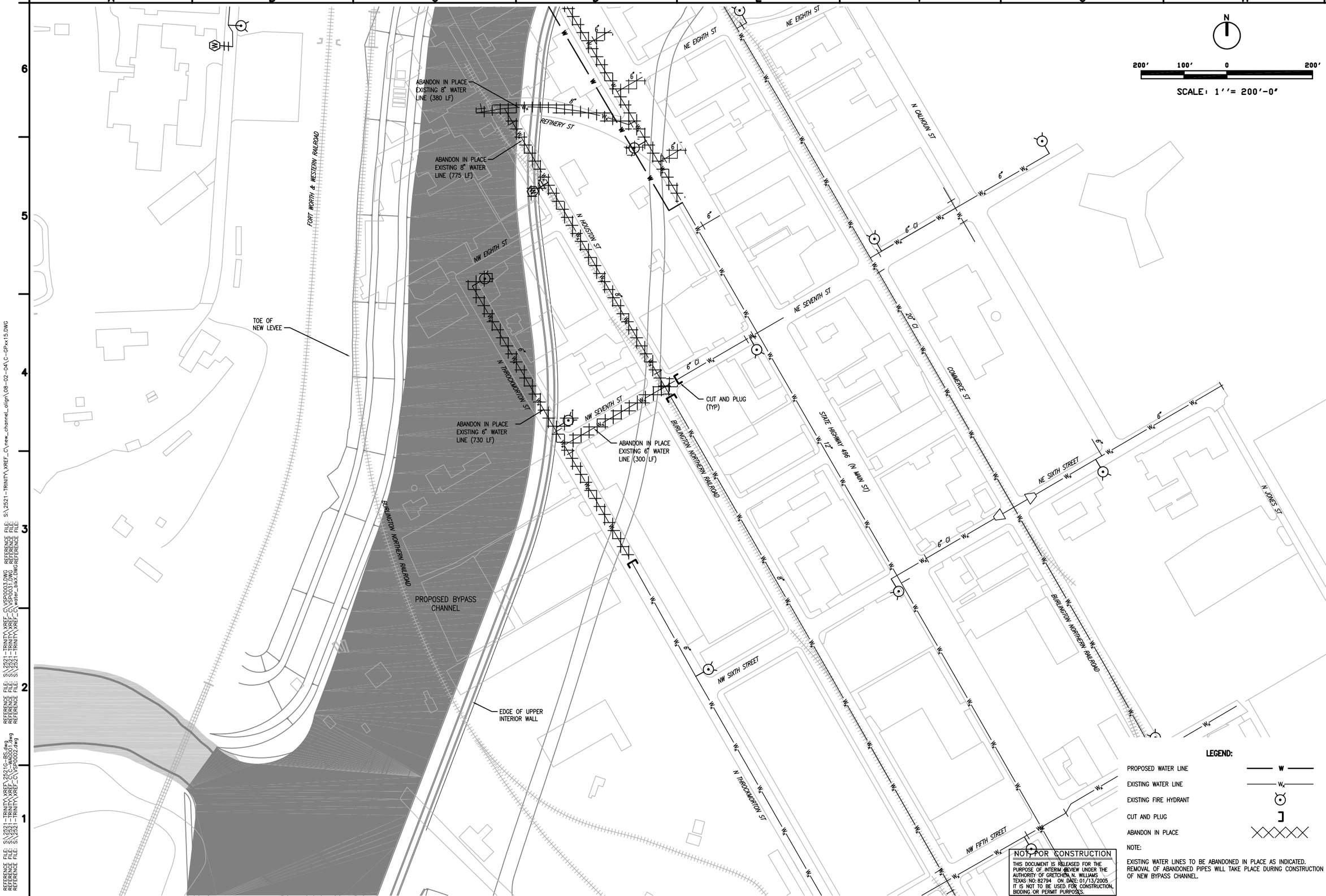


N

200' 100' 0 200'

SCALE: 1''= 200'-0"

**LEGEND:**

| | |
|---|---|
| PROPOSED WATER LINE | W |
| EXISTING WATER LINE | $W_x$ |
| EXISTING FIRE HYDRANT | |
| CUT AND PLUG | |
| ABANDON IN PLACE | |

NOTE:

EXISTING WATER LINES TO BE ABANDONED IN PLACE AS INDICATED. REMOVAL OF ABANDONED PIPES WILL TAKE PLACE DURING CONSTRUCTION OF NEW BYPASS CHANNEL.

**NOT FOR CONSTRUCTION**

THIS DOCUMENT IS RELEASED FOR THE PURPOSE OF INTERIM REVIEW UNDER THE AUTHORITY OF GRETCHEN N. WILLIAMS TEXAS NO: 82794 ON DATE: 01/13/2005 IT IS NOT TO BE USED FOR CONSTRUCTION, BIDDING OR PERMIT PURPOSES.

US Army Corps of Engineers
Fort Worth District

| Symbol | Description | Xx | Xx | Xx | Date |
|---|---|---|---|---|---|

TARRANT REGIONAL WATER DISTRICT

CDM

Designed by: G. CHIANG
Dwn by: B. LATHAM
Reviewed by: G. WILLIAMS
Submitted by: NAME TITLE

Date: JANUARY 2005
Sol No. XXXXXX
Contr No. XXXXXX
File name: XXXXX
Plot date: XXXXX
Plot scale: XXXXXX

FORT WORTH CENTRAL CITY PRELIMINARY DESIGN

# WATER (POTABLE) PLAN II

SEQUENCE NO.
CU-WA-3

Sheet 51 of 139

DESIGN FILE: CU103051.dwg

Contr No.

REFERENCE FILE: S:\2521-TRINITY\XREF\2521G-BS.dwg
REFERENCE FILE: S:\2521-TRINITY\XREF_C\C-WA0001.dwg
REFERENCE FILE: S:\2521-TRINITY\XREF_C\VSP0002.dwg
REFERENCE FILE: S:\2521-TRINITY\XREF_C\VSP0003.DWG
REFERENCE FILE: S:\2521-TRINITY\XREF_C\VSP0031.DWG
REFERENCE FILE: S:\2521-TRINITY\XREF_C\water_blkX.DWG

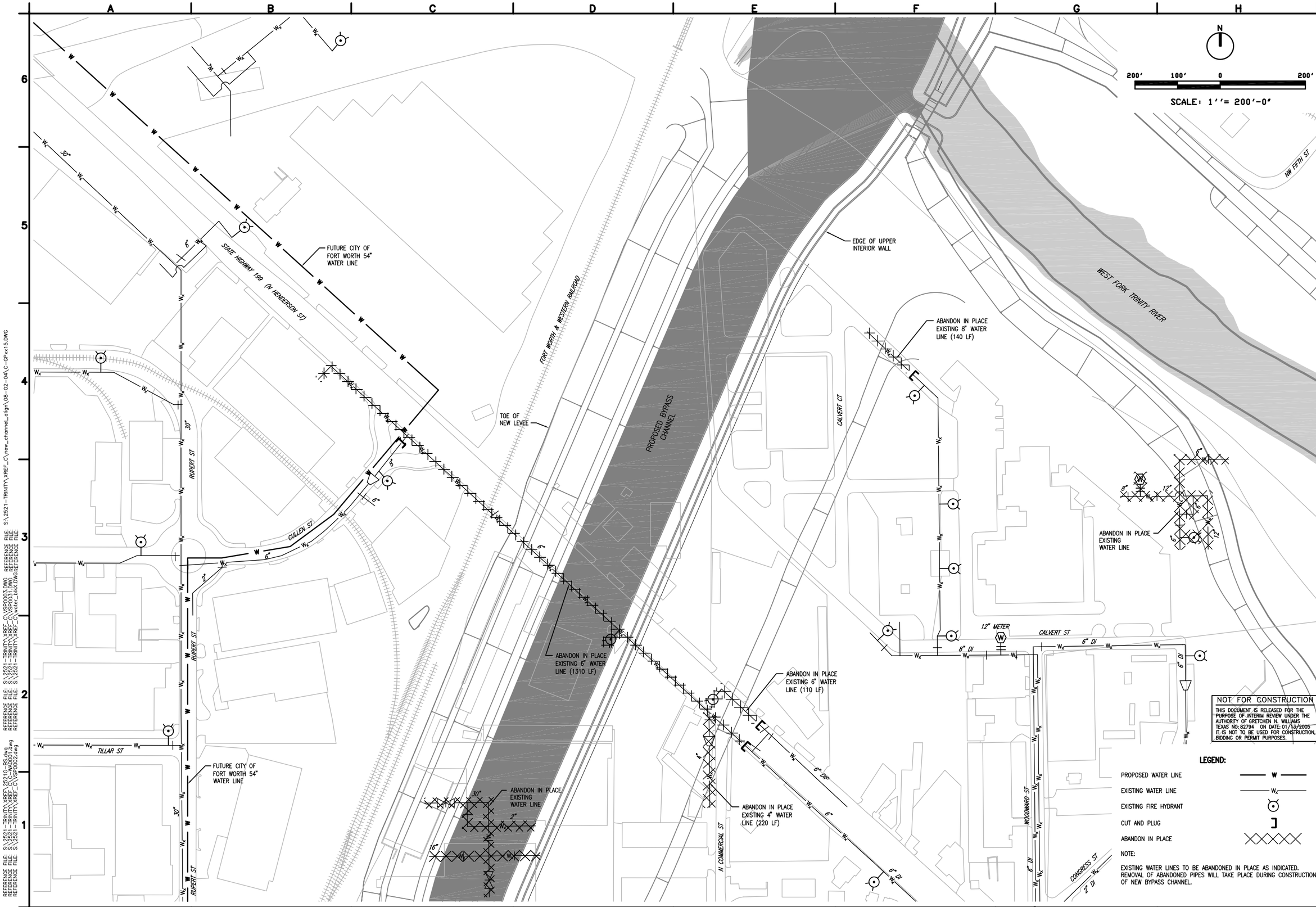


NOT FOR CONSTRUCTION

THIS DOCUMENT IS RELEASED FOR THE PURPOSE OF INTERIM REVIEW UNDER THE AUTHORITY OF GRETCHEN N. WILLIAMS TEXAS NO: 82794 ON DATE: 01/13/2005 IT IS NOT TO BE USED FOR CONSTRUCTION, BIDDING OR PERMIT PURPOSES.

**LEGEND:**

| | |
|---|---|
| PROPOSED WATER LINE | W |
| EXISTING WATER LINE | $W_x$ |
| EXISTING FIRE HYDRANT | |
| CUT AND PLUG | |
| ABANDON IN PLACE | |

NOTE:

EXISTING WATER LINES TO BE ABANDONED IN PLACE AS INDICATED. REMOVAL OF ABANDONED PIPES WILL TAKE PLACE DURING CONSTRUCTION OF NEW BYPASS CHANNEL.

US Army Corps of Engineers
Fort Worth District

| Symbol | Description | Ex. D.O. NO. | Ex. Action | Ex. Date |
|---|---|---|---|---|

Designed by: G. CHIANG
Dwn by: B. LATHAM
Reviewed by: G. WILLIAMS
Submitted by: NAME TITLE
Date: JANUARY 2005
Sol No. XXXXXX
Contr No. XXXXXX
File name: XXXXX
Plot date: XXXXX
Plot scale: XXXXXX

TARRANT REGIONAL WATER DISTRICT

CDM

FORT WORTH CENTRAL CITY PRELIMINARY DESIGN

# WATER (POTABLE) PLAN III

SEQUENCE NO.
CU-WA-4

Sheet 52 of 139

DESIGN FILE: CU104052.dwg

Contr No.

REFERENCE FILE: S:\2521-TRINITY\XREF\2521G-BS.dwg
REFERENCE FILE: S:\2521-TRINITY\XREF_C\C-WA0001.dwg
REFERENCE FILE: S:\2521-TRINITY\XREF_C\VSP0002.dwg
REFERENCE FILE: S:\2521-TRINITY\XREF_C\VSP0003.DWG
REFERENCE FILE: S:\2521-TRINITY\XREF_C\VSP0031.DWG
REFERENCE FILE: S:\2521-TRINITY\XREF_C\water_blkX.DWG
REFERENCE FILE: S:\2521-TRINITY\XREF_C\new_channel_align\08-02-04\C-GPxx15.DWG

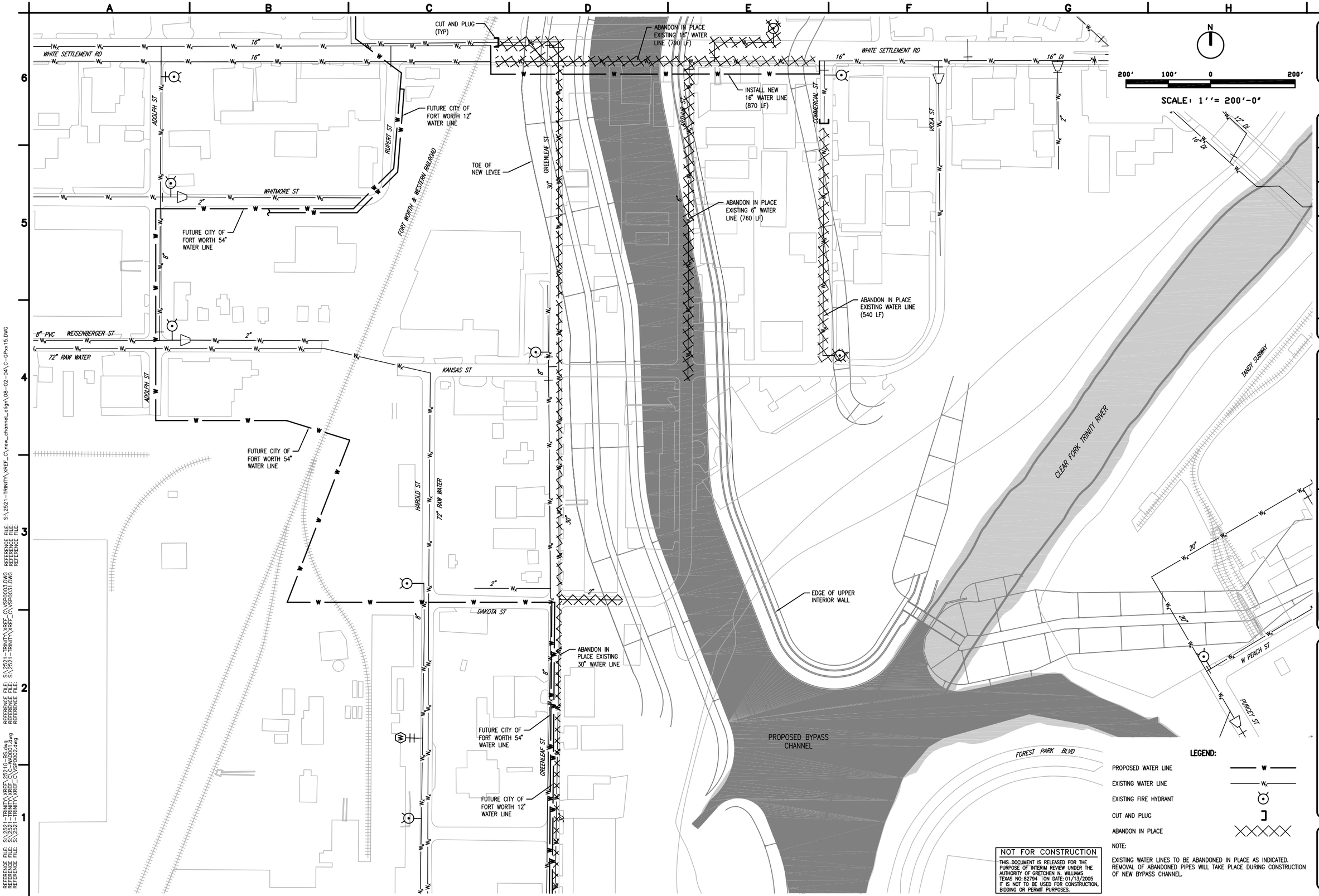


**LEGEND:**

| | |
|---|---|
| PROPOSED WATER LINE | W |
| EXISTING WATER LINE | $W_x$ |
| EXISTING FIRE HYDRANT | |
| CUT AND PLUG | |
| ABANDON IN PLACE | |

NOTE:

EXISTING WATER LINES TO BE ABANDONED IN PLACE AS INDICATED. REMOVAL OF ABANDONED PIPES WILL TAKE PLACE DURING CONSTRUCTION OF NEW BYPASS CHANNEL.

NOT FOR CONSTRUCTION

THIS DOCUMENT IS RELEASED FOR THE PURPOSE OF INTERIM REVIEW UNDER THE AUTHORITY OF GRETCHEN N. WILLIAMS TEXAS NO: 82794 ON DATE: 01/13/2005 IT IS NOT TO BE USED FOR CONSTRUCTION, BIDDING OR PERMIT PURPOSES.

US Army Corps of Engineers
Fort Worth District

| Symbol | Description | Dwn. | Ckd. | Date |
|---|---|---|---|---|

Designed by: G. CHIANG
Dwn by: B. LATHAM
Reviewed by: G. WILLIAMS
Submitted by: NAME TITLE
Date: JANUARY 2005
Sol No. XXXXXX
Contr No. XXXXXX
File name: XXXXX
Plot date: XXXXX
Plot scale: XXXXXX

TARRANT REGIONAL WATER DISTRICT

CDM

FORT WORTH CENTRAL CITY PRELIMINARY DESIGN

# WATER (POTABLE) PLAN IV

SEQUENCE NO.
CU-WA-5

Sheet 53 of 139

DESIGN FILE: CU105053.dwg

Contr No.

REFERENCE FILE: S:\2521-TRINITY\XREF_C\new_channel_align\08-02-04\C-GPxx15.DWG
REFERENCE FILE: S:\2521-TRINITY\XREF_C\VSP0003.DWG
REFERENCE FILE: S:\2521-TRINITY\XREF_C\VSP0031.DWG
REFERENCE FILE: S:\2521-TRINITY\XREF_C\C-WA0001.dwg
REFERENCE FILE: S:\2521-TRINITY\XREF_C\VSP0002.dwg

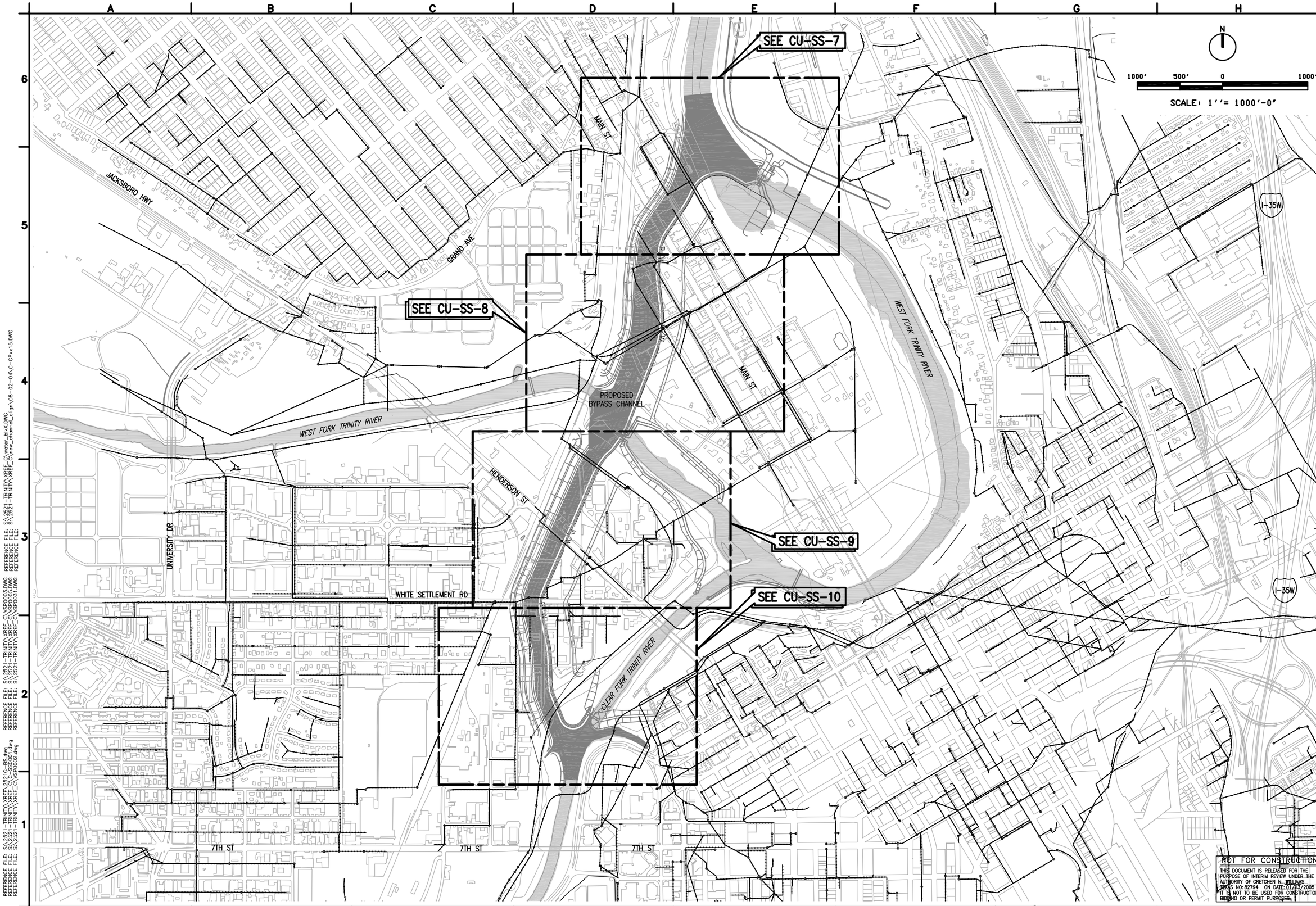


US Army Corps of Engineers
Fort Worth District

| Symbol | Description | Mod. No. | Action | Date |
|---|---|---|---|---|

Date: JANUARY 2005
Sol No. XXXXXX
Contr No. XXXXXX
File name: XXXXX
Plot date: XXXXXX
Plot scale: XXXXXX

Designed by: G. CHIANG
Dwn by: B. LATHAM
Reviewed by: G. WILLIAMS
Submitted by: NAME TITLE

TARRANT REGIONAL WATER DISTRICT

CDM

FORT WORTH CENTRAL CITY
PRELIMINARY DESIGN

# OVERALL SANITARY SEWER PLAN

SEQUENCE NO.
CU-SS-6

Sheet 54 of 139

NOT FOR CONSTRUCTION
THIS DOCUMENT IS RELEASED FOR THE PURPOSE OF INTERIM REVIEW UNDER THE AUTHORITY OF GRETCHEN N. WILLIAMS TEXAS NO: 82794 ON DATE: 07/13/2005
IT IS NOT TO BE USED FOR CONSTRUCTION, BIDDING OR PERMIT PURPOSES.

DESIGN FILE: CU406054.dwg

Contr No.

REFERENCE FILE: S:\2521-TRINITY\XREF_C\water_blkX.DWG
REFERENCE FILE: S:\2521-TRINITY\XREF_C\new_channel_align\08-02-04\C-GPxx15.DWG
REFERENCE FILE: S:\2521-TRINITY\XREF_C\VSP0003.DWG
REFERENCE FILE: S:\2521-TRINITY\XREF_C\VSP0005.DWG
REFERENCE FILE: S:\2521-TRINITY\XREF_C\VSP0031.DWG
REFERENCE FILE: S:\2521-TRINITY\XREF_C\VSP0002.dwg
REFERENCE FILE: S:\2521-TRINITY\XREF_C\C-SS0001.dwg
REFERENCE FILE: S:\2521-TRINITY\XREF_C\2521C-BS.dwg

**LEGEND:**

| | |
|---|---|
| PROPOSED SANITARY SEWER LINE | SS |
| EXISTING SANITARY SEWER LINE | $SS_x$ |
| ABANDONED SANITARY SEWER LINE | |
| MANHOLE/JUNCTION BOX | S |
| CUT AND PLUG | ] |
| ABANDON IN PLACE | XXXXX |

NOTE:

EXISTING SEWER LINES TO BE ABANDONED IN PLACE AS INDICATED. REMOVAL OF ABANDONED PIPES WILL TAKE PLACE DURING CONSTRUCTION OF NEW BYPASS CHANNEL.

NOT FOR CONSTRUCTION

THIS DOCUMENT IS RELEASED FOR THE PURPOSE OF INTERIM REVIEW UNDER THE AUTHORITY OF GRETCHEN N. WILLIAMS TEXAS NO: 82794 ON DATE: 01/13/2005 IT IS NOT TO BE USED FOR CONSTRUCTION, BIDDING OR PERMIT PURPOSES.

US Army Corps of Engineers
Fort Worth District

| Symbol | Description | D.O. NO. | Action | Date |
|---|---|---|---|---|
| | | xx | xx | xx |

TARRANT REGIONAL WATER DISTRICT

CDM

Designed by: G. CHIANG
Dwn by: B. LATHAM
Reviewed by: G. WILLIAMS
Submitted by:
NAME
TITLE

Date: JANUARY 2005
Sol No. XXXXXX
Contr No. XXXXXX
File name: XXXXX
Plot date: XXXXX
Plot scale: XXXXXX

FORT WORTH CENTRAL CITY PRELIMINARY DESIGN

# SANITARY SEWER PLAN I

SEQUENCE NO.
CU-SS-7



DESIGN FILE: CU107055.dwg

Contr No.

REFERENCE FILE: S:\2521-TRINITY\XREF\2521G-BS.dwg
REFERENCE FILE: S:\2521-TRINITY\XREF_C\C-SS0001.dwg
REFERENCE FILE: S:\2521-TRINITY\XREF_C\VSP0002.dwg
REFERENCE FILE: S:\2521-TRINITY\XREF_C\VSP0003.DWG
REFERENCE FILE: S:\2521-TRINITY\XREF_C\VSP0031.DWG
REFERENCE FILE: S:\2521-TRINITY\XREF_C\water_bikX.DWG
REFERENCE FILE: S:\2521-TRINITY\XREF_C\new_channel_align\08-02-04\C-GPxx15.DWG

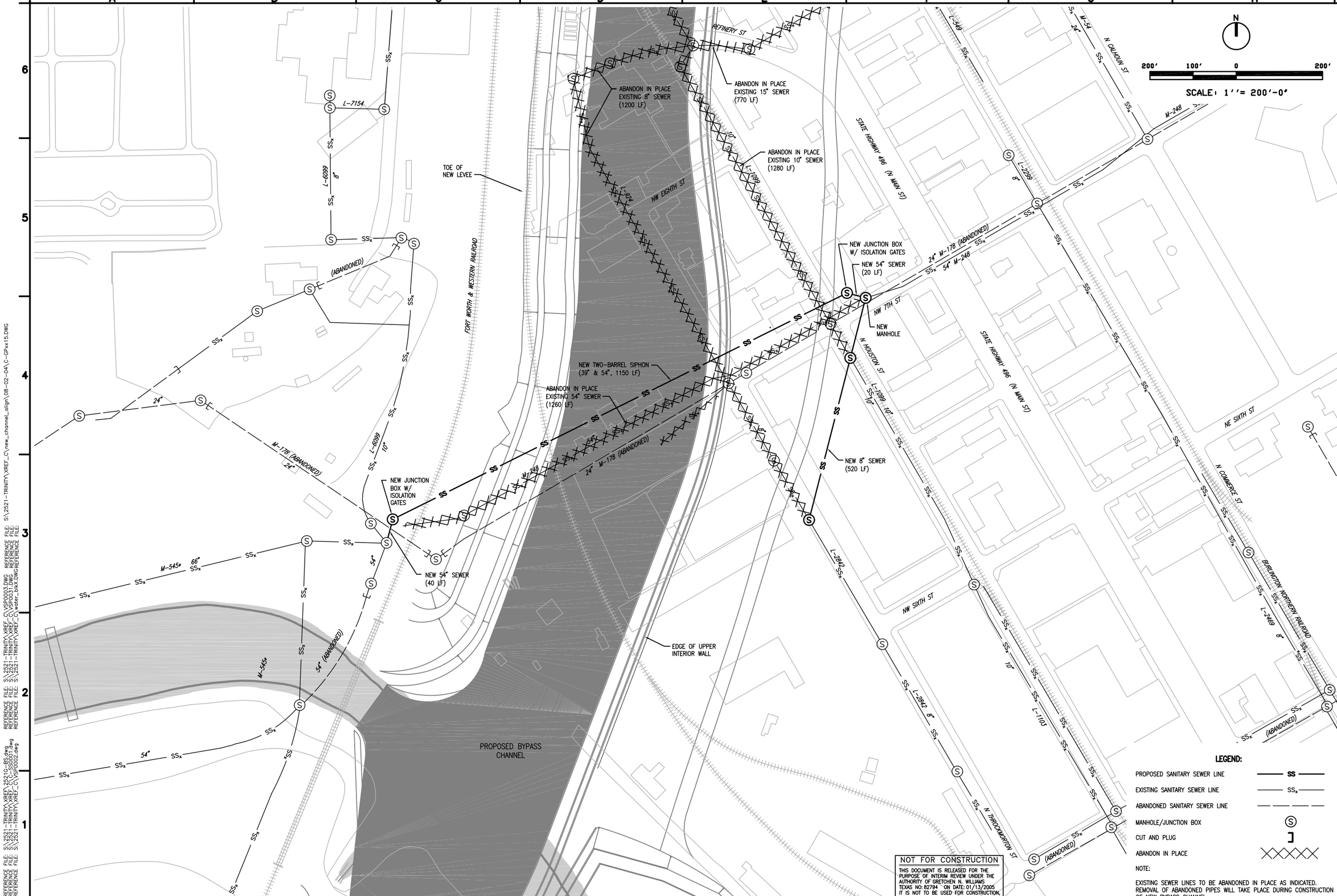


US Army Corps of Engineers
Fort Worth District

| Symbol | Description | By | Date | No. | Action | By | Date |
|---|---|---|---|---|---|---|---|

**LEGEND:**

| | |
|---|---|
| PROPOSED SANITARY SEWER LINE | SS |
| EXISTING SANITARY SEWER LINE | $SS_x$ |
| ABANDONED SANITARY SEWER LINE | |
| MANHOLE/JUNCTION BOX | S |
| CUT AND PLUG | |
| ABANDON IN PLACE | |

NOTE:

EXISTING SEWER LINES TO BE ABANDONED IN PLACE AS INDICATED. REMOVAL OF ABANDONED PIPES WILL TAKE PLACE DURING CONSTRUCTION OF NEW BYPASS CHANNEL.

NOT FOR CONSTRUCTION

THIS DOCUMENT IS RELEASED FOR THE PURPOSE OF INTERIM REVIEW UNDER THE AUTHORITY OF GRETCHEN N. WILLIAMS TEXAS NO: 82794 ON DATE: 01/13/2005 IT IS NOT TO BE USED FOR CONSTRUCTION, BIDDING OR PERMIT PURPOSES.

Date: JANUARY 2005
Sol No. XXXXXX
Contr No. XXXXXX
File name: XXXXX
Plot date: XXXXX
Plot scale: XXXXXX

Designed by: G. CHIANG
Dwn by: B. LATHAM
Reviewed by: G. WILLIAMS
Submitted by: NAME TITLE

TARRANT REGIONAL WATER DISTRICT

CDM

FORT WORTH CENTRAL CITY PRELIMINARY DESIGN

# SANITARY SEWER PLAN II

SEQUENCE NO.
CU-SS-8

Sheet 56 of 139

DESIGN FILE: CU108056.dwg

REFERENCE FILE: S:\2521-TRINITY\XREF_C\new_channel_align\08-02-04\C-GPix15.DWG
REFERENCE FILE: S:\2521-TRINITY\XREF_C\VSP0003.DWG
REFERENCE FILE: S:\2521-TRINITY\XREF_C\VSP0031.DWG
REFERENCE FILE: S:\2521-TRINITY\XREF_C\water_bixx.DWG
REFERENCE FILE: S:\2521-TRINITY\XREF_2521G-BS.dwg
REFERENCE FILE: S:\2521-TRINITY\XREF_C\C-SS0001.dwg
REFERENCE FILE: S:\2521-TRINITY\XREF_C\VSP0002.dwg

Contr No.

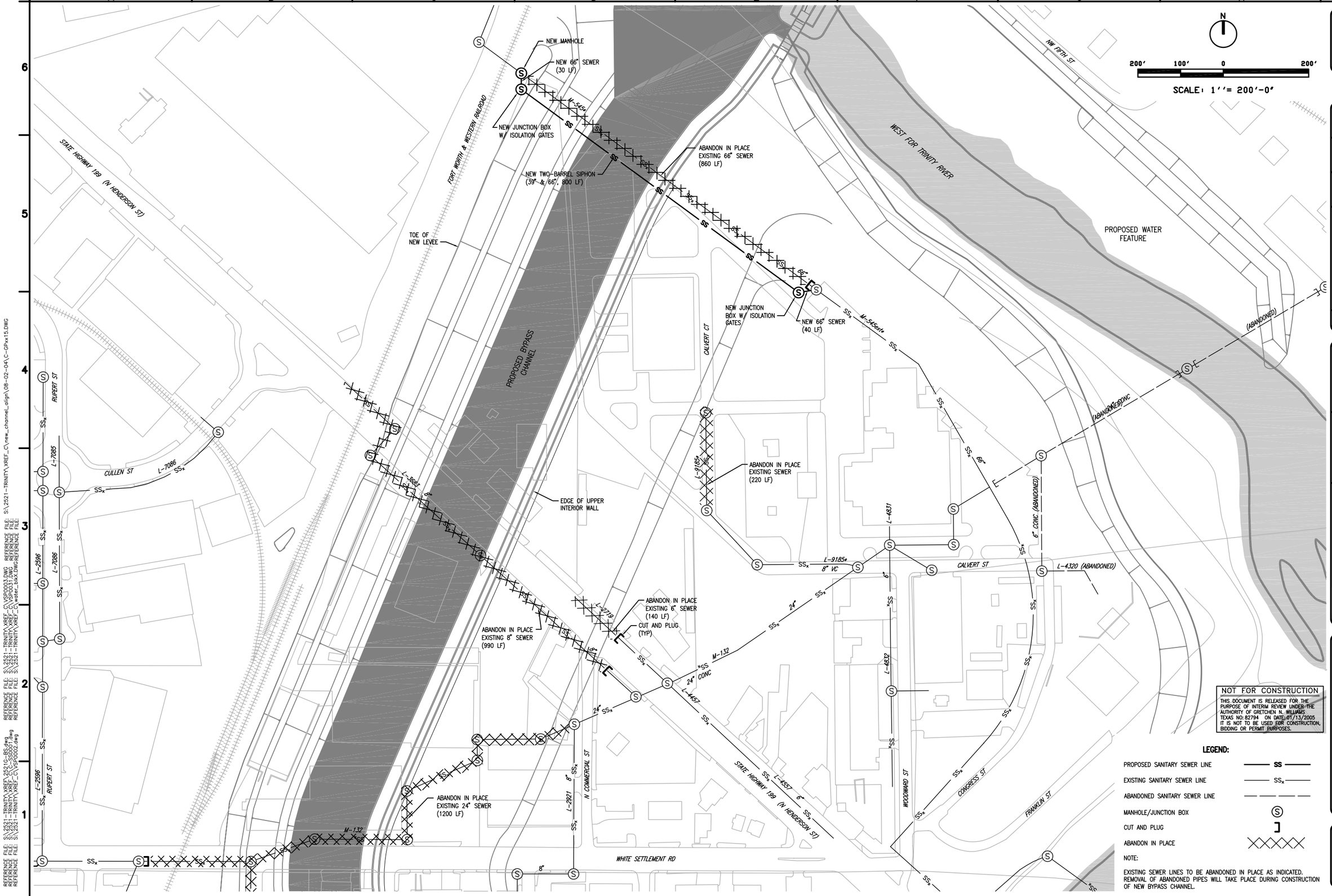


NOT FOR CONSTRUCTION

THIS DOCUMENT IS RELEASED FOR THE PURPOSE OF INTERIM REVIEW UNDER THE AUTHORITY OF GRETCHEN N. WILLIAMS. TEXAS NO: 82794 ON DATE: 01/13/2005 IT IS NOT TO BE USED FOR CONSTRUCTION, BIDDING OR PERMIT PURPOSES.

**LEGEND:**

| | |
|---|---|
| PROPOSED SANITARY SEWER LINE | SS |
| EXISTING SANITARY SEWER LINE | $SS_x$ |
| ABANDONED SANITARY SEWER LINE | |
| MANHOLE/JUNCTION BOX | S |
| CUT AND PLUG | ] |
| ABANDON IN PLACE | XXXXX |

NOTE:

EXISTING SEWER LINES TO BE ABANDONED IN PLACE AS INDICATED. REMOVAL OF ABANDONED PIPES WILL TAKE PLACE DURING CONSTRUCTION OF NEW BYPASS CHANNEL.

US Army Corps of Engineers
Fort Worth District

| Symbol | Description | By | Date | No. | Action | By | Date |
|---|---|---|---|---|---|---|---|

Designed by: G. CHANG
Dwn by: B. LATHAM
Reviewed by: G. WILLIAMS
Submitted by: NAME TITLE
Date: JANUARY 2005
Sol No. XXXXXX
Contr No. XXXXXX
File name: XXXXX
Plot date: XXXXX
Plot scale: XXXXXX

TARRANT REGIONAL WATER DISTRICT

CDM

FORT WORTH CENTRAL CITY PRELIMINARY DESIGN

# SANITARY SEWER PLAN III

SEQUENCE NO.
CU-SS-9

Sheet 57 of 139

DESIGN FILE: CU109057.dwg

REFERENCE FILE: S:\2521-TRINITY\XREF_C\new_channel_align\08-02-04\C-GPix15.DWG
REFERENCE FILE: S:\2521-TRINITY\XREF_C\VSP0003.DWG
REFERENCE FILE: S:\2521-TRINITY\XREF_C\VSP0031.DWG
REFERENCE FILE: S:\2521-TRINITY\XREF_C\water_bldx.DWG
REFERENCE FILE: S:\2521-TRINITY\XREF_2521G-BS.dwg
REFERENCE FILE: S:\2521-TRINITY\XREF_C\C-SS0001.dwg
REFERENCE FILE: S:\2521-TRINITY\XREF_C\VSP0002.dwg

Contr No.

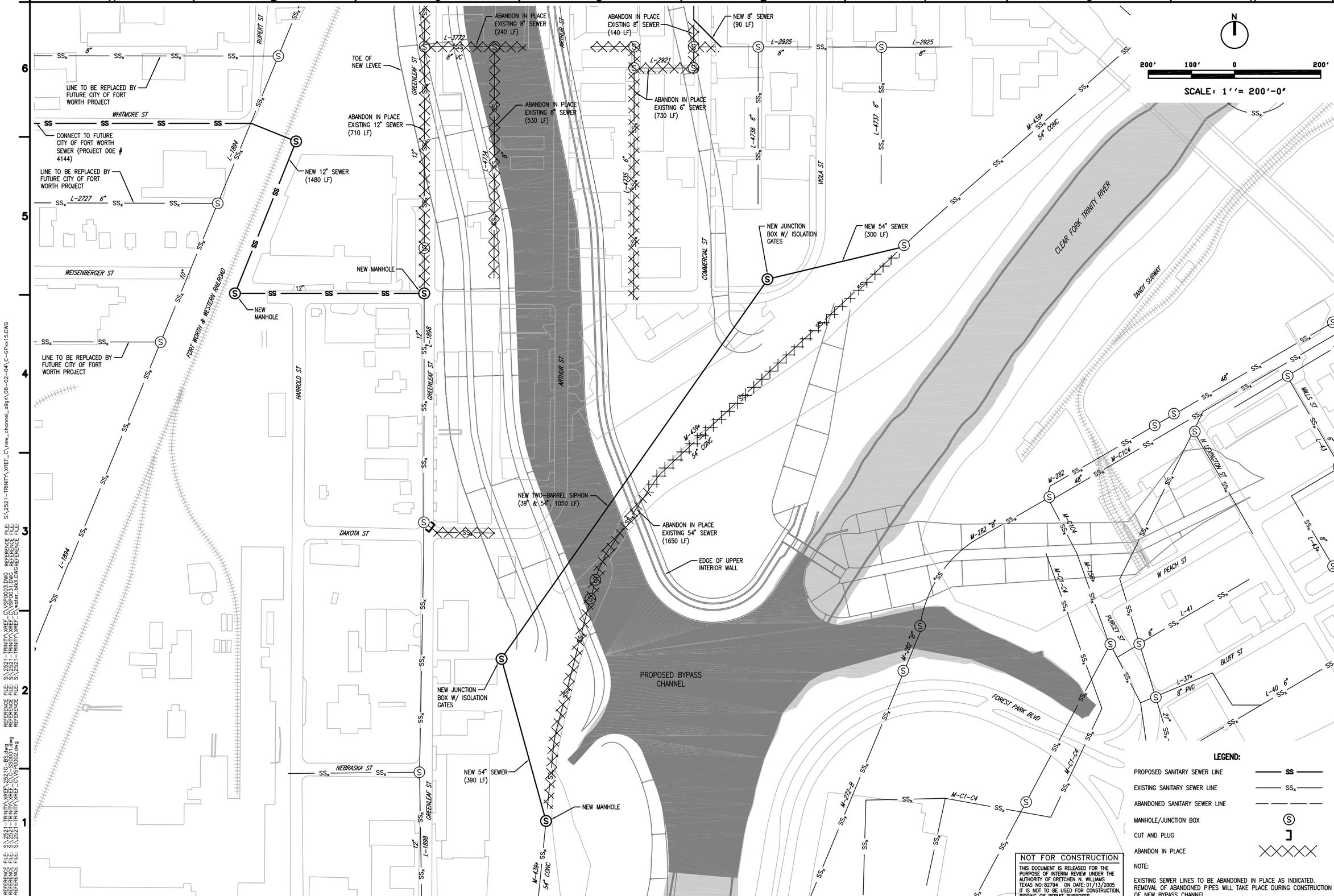


**LEGEND:**

| | |
|---|---|
| PROPOSED SANITARY SEWER LINE | SS |
| EXISTING SANITARY SEWER LINE | $SS_x$ |
| ABANDONED SANITARY SEWER LINE | |
| MANHOLE/JUNCTION BOX | S |
| CUT AND PLUG | ] |
| ABANDON IN PLACE | XXXXX |

NOTE:

EXISTING SEWER LINES TO BE ABANDONED IN PLACE AS INDICATED. REMOVAL OF ABANDONED PIPES WILL TAKE PLACE DURING CONSTRUCTION OF NEW BYPASS CHANNEL.

**NOT FOR CONSTRUCTION**

THIS DOCUMENT IS RELEASED FOR THE PURPOSE OF INTERIM REVIEW UNDER THE AUTHORITY OF GRETCHEN N. WILLIAMS TEXAS NO: 82794 ON DATE: 01/13/2005 IT IS NOT TO BE USED FOR CONSTRUCTION, BIDDING OR PERMIT PURPOSES.

US Army Corps of Engineers
Fort Worth District

| Symbol | Description | D.O. NO. | Action | Date |
|---|---|---|---|---|

Designed by: G. CHIANG
Dwn by: B. LATHAM
Reviewed by: G. WILLIAMS
Submitted by: NAME TITLE
Date: JANUARY 2005
Sol No. XXXXXX
Contr No. XXXXXX
File name: XXXXX
Plot date: XXXXX
Plot scale: XXXXXX

TARRANT REGIONAL WATER DISTRICT

CDM

FORT WORTH CENTRAL CITY PRELIMINARY DESIGN

# SANITARY SEWER PLAN IV

SEQUENCE NO.
CU-SS-10



DESIGN FILE: CU110058.dwg

Contr No.

REFERENCE FILE: S:\2521-TRINITY\XREF_C\new_channel_align\08-02-04\C-GPxx15.DWG
REFERENCE FILE: S:\2521-TRINITY\XREF_C\VSP0003.DWG
REFERENCE FILE: S:\2521-TRINITY\XREF_C\VSP0031.DWG
REFERENCE FILE: S:\2521-TRINITY\XREF_C\water_bikX.DWG
REFERENCE FILE: S:\2521-TRINITY\XREF_C\VSP0002.dwg
REFERENCE FILE: S:\2521-TRINITY\XREF_C\C-SS0001.dwg
REFERENCE FILE: S:\2521-TRINITY\XREF_C\VSP0002.dwg

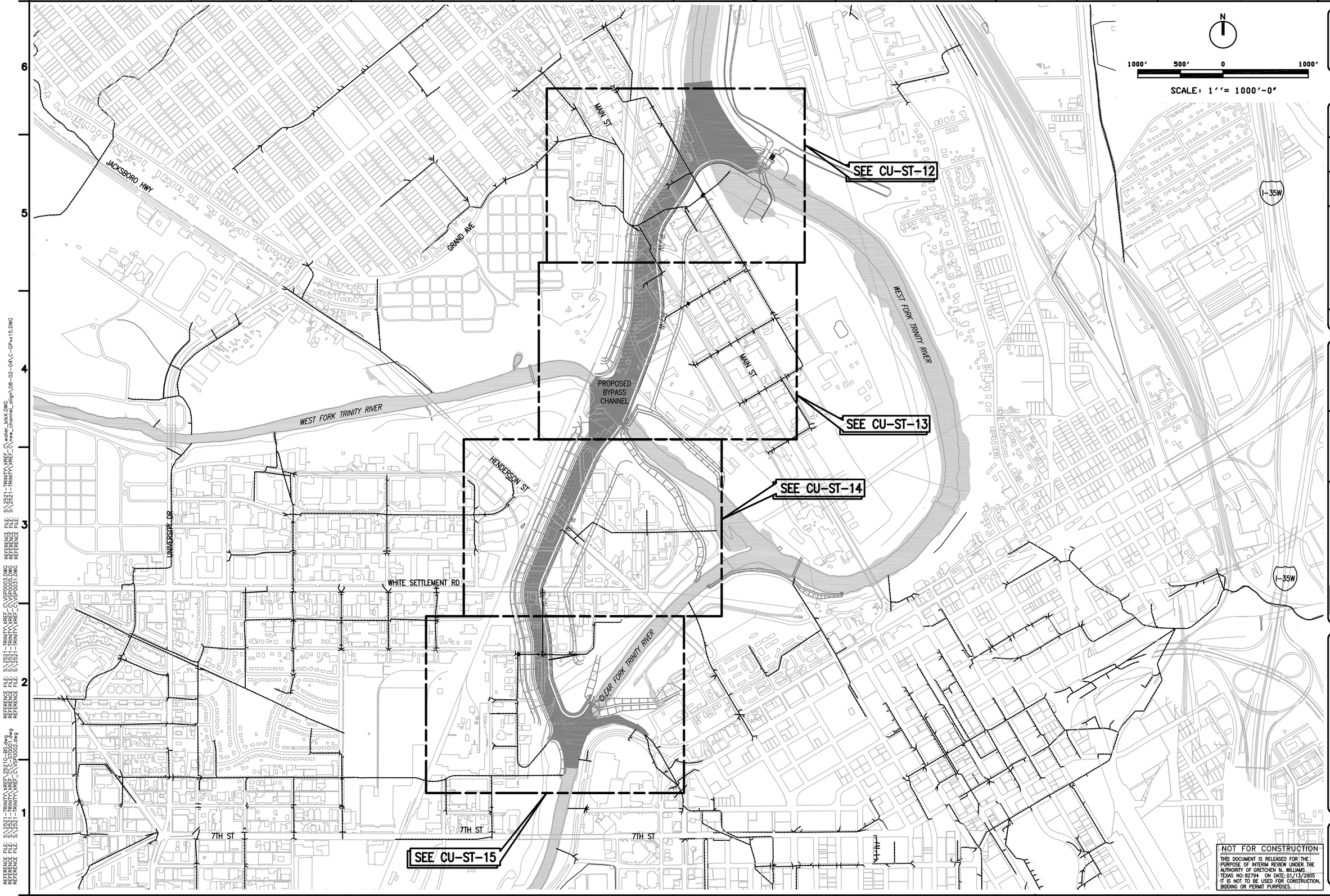


US Army Corps of Engineers
Fort Worth District

| Symbol | Description | By | Appd | Date |
|---|---|---|---|---|

TARRANT REGIONAL WATER DISTRICT

CDM

Designed by: G. CHIANG
Dwn by: B. LATHAM
Reviewed by: Name
Submitted by: NAME TITLE

Date: JANUARY 2005
Sol No. XXXXXX
Contr No. XXXXXX
File name: XXXXX
Plot date: XXXXXX
Plot scale: XXXXXX

DESIGN FILE: CU411059.dwg

FORT WORTH CENTRAL CITY PRELIMINARY DESIGN

# OVERALL STORM DRAINAGE PLAN

SEQUENCE NO.
CU-ST-11



NOT FOR CONSTRUCTION
THIS DOCUMENT IS RELEASED FOR THE PURPOSE OF INTERIM REVIEW UNDER THE AUTHORITY OF GRETCHEN N. WILLIAMS TEXAS NO: 82794 ON DATE: 01/13/2005
IT IS NOT TO BE USED FOR CONSTRUCTION, BIDDING OR PERMIT PURPOSES.

Contr No.

REFERENCE FILE: S:\2521-TRINITY\XREF_C\water_blkX.DWG
REFERENCE FILE: S:\2521-TRINITY\XREF_C\new_channel_align\08-02-04\C-GPxx15.DWG
REFERENCE FILE: S:\2521-TRINITY\XREF_C\VSP0003.DWG
REFERENCE FILE: S:\2521-TRINITY\XREF_C\VSP0005.DWG
REFERENCE FILE: S:\2521-TRINITY\XREF_C\VSP0031.DWG
REFERENCE FILE: S:\2521-TRINITY\XREF_C\VSP0002.dwg
REFERENCE FILE: S:\2521-TRINITY\XREF_2521G-BS.dwg
REFERENCE FILE: S:\2521-TRINITY\XREF_C\C-ST0001.dwg

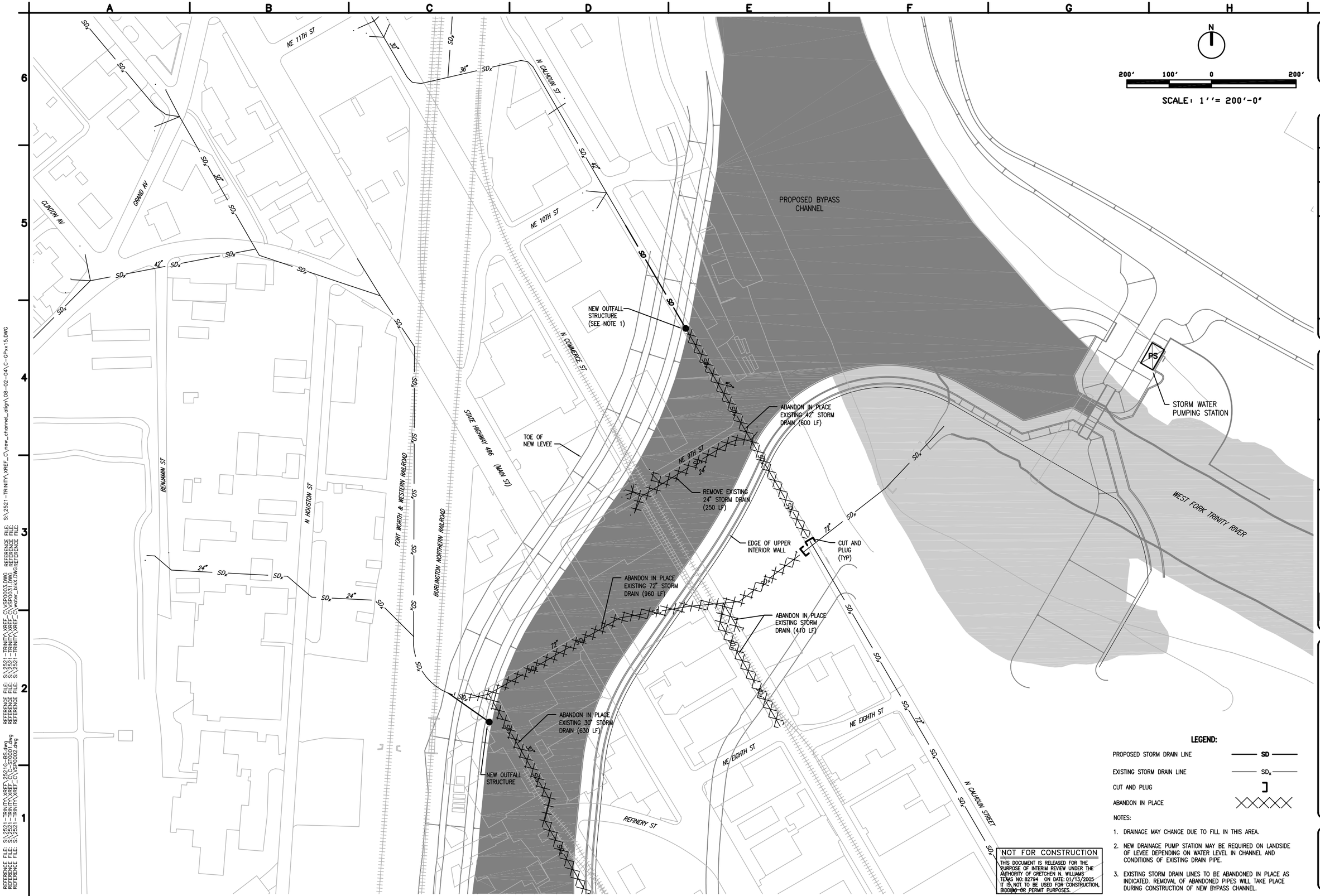


**LEGEND:**

| | |
|---|---|
| PROPOSED STORM DRAIN LINE | SD |
| EXISTING STORM DRAIN LINE | $SD_x$ |
| CUT AND PLUG | ] |
| ABANDON IN PLACE | XXXXX |

NOTES:

1. DRAINAGE MAY CHANGE DUE TO FILL IN THIS AREA.
2. NEW DRAINAGE PUMP STATION MAY BE REQUIRED ON LANDSIDE OF LEVEE DEPENDING ON WATER LEVEL IN CHANNEL AND CONDITIONS OF EXISTING DRAIN PIPE.
3. EXISTING STORM DRAIN LINES TO BE ABANDONED IN PLACE AS INDICATED. REMOVAL OF ABANDONED PIPES WILL TAKE PLACE DURING CONSTRUCTION OF NEW BYPASS CHANNEL.

NOT FOR CONSTRUCTION

THIS DOCUMENT IS RELEASED FOR THE PURPOSE OF INTERIM REVIEW UNDER THE AUTHORITY OF GRETCHEN N. WILLIAMS TEXAS NO: 82794 ON DATE: 01/13/2005 IT IS NOT TO BE USED FOR CONSTRUCTION, BIDDING OR PERMIT PURPOSES.

US Army Corps of Engineers
Fort Worth District

| Symbol | Description | Dwn. | Ckd. | Date |
|---|---|---|---|---|
| | | | | |

TARRANT REGIONAL WATER DISTRICT

CDM

Designed by: G. CHIANG
Dwn by: B. LATHAM
Reviewed by: G. WILLIAMS
Submitted by: NAME TITLE
Date: JANUARY 2005
Sol No. XXXXXX
Contr No. XXXXXX
File name: XXXXX
Plot date: XXXXX
Plot scale: XXXXXX

FORT WORTH CENTRAL CITY PRELIMINARY DESIGN

# STORM DRAINAGE PLAN I

SEQUENCE NO.
CU-ST-12



DESIGN FILE: CU112060.dwg

Contr No.

**LEGEND:**

| | |
|---|---|
| PROPOSED STORM DRAIN LINE | SD |
| EXISTING STORM DRAIN LINE | $SD_x$ |
| CUT AND PLUG | ] |
| ABANDON IN PLACE | XXXXX |

NOTES:

1. DRAINAGE MAY CHANGE DUE TO FILL IN THIS AREA.
2. EXISTING STORM DRAIN LINES TO BE ABANDONED IN PLACE AS INDICATED. REMOVAL OF ABANDONED PIPES WILL TAKE PLACE DURING CONSTRUCTION OF NEW BYPASS CHANNEL.

**NOT FOR CONSTRUCTION**

THIS DOCUMENT IS RELEASED FOR THE PURPOSE OF INTERIM REVIEW UNDER THE AUTHORITY OF GRETCHEN N. WILLIAMS TEXAS NO: 82794 ON DATE: 01/13/2005 IT IS NOT TO BE USED FOR CONSTRUCTION, BIDDING OR PERMIT PURPOSES.

US Army Corps of Engineers
Fort Worth District

| Symbol | Description | Ex. D.O. No. | Ex. Action | Ex. Date |
|---|---|---|---|---|

Designed by: G. CHIANG
Dwn by: B. LATHAM
Reviewed by: G. WILLIAMS
Submitted by: NAME TITLE
Date: JANUARY 2005
Sol No. XXXXXX
Contr No. XXXXXX
File name: XXXXX
Plot date: XXXXX
Plot scale: XXXXXX

TARRANT REGIONAL WATER DISTRICT

CDM

FORT WORTH CENTRAL CITY PRELIMINARY DESIGN

# STORM DRAINAGE PLAN II

SEQUENCE NO.
CU-ST-13



DESIGN FILE: CU113061.dwg

Contr No.

REFERENCE FILE: S:\2521-TRINITY\XREF\2521G-BS.dwg
REFERENCE FILE: S:\2521-TRINITY\XREF_C\C-ST0001.dwg
REFERENCE FILE: S:\2521-TRINITY\XREF_C\VSP0002.dwg
REFERENCE FILE: S:\2521-TRINITY\XREF_C\VSP0003.DWG
REFERENCE FILE: S:\2521-TRINITY\XREF_C\VSP0031.DWG
REFERENCE FILE: S:\2521-TRINITY\XREF_C\water_blkX.DWG
REFERENCE FILE: S:\2521-TRINITY\XREF_C\new_channel_align\08-02-04\C-GPxx15.DWG

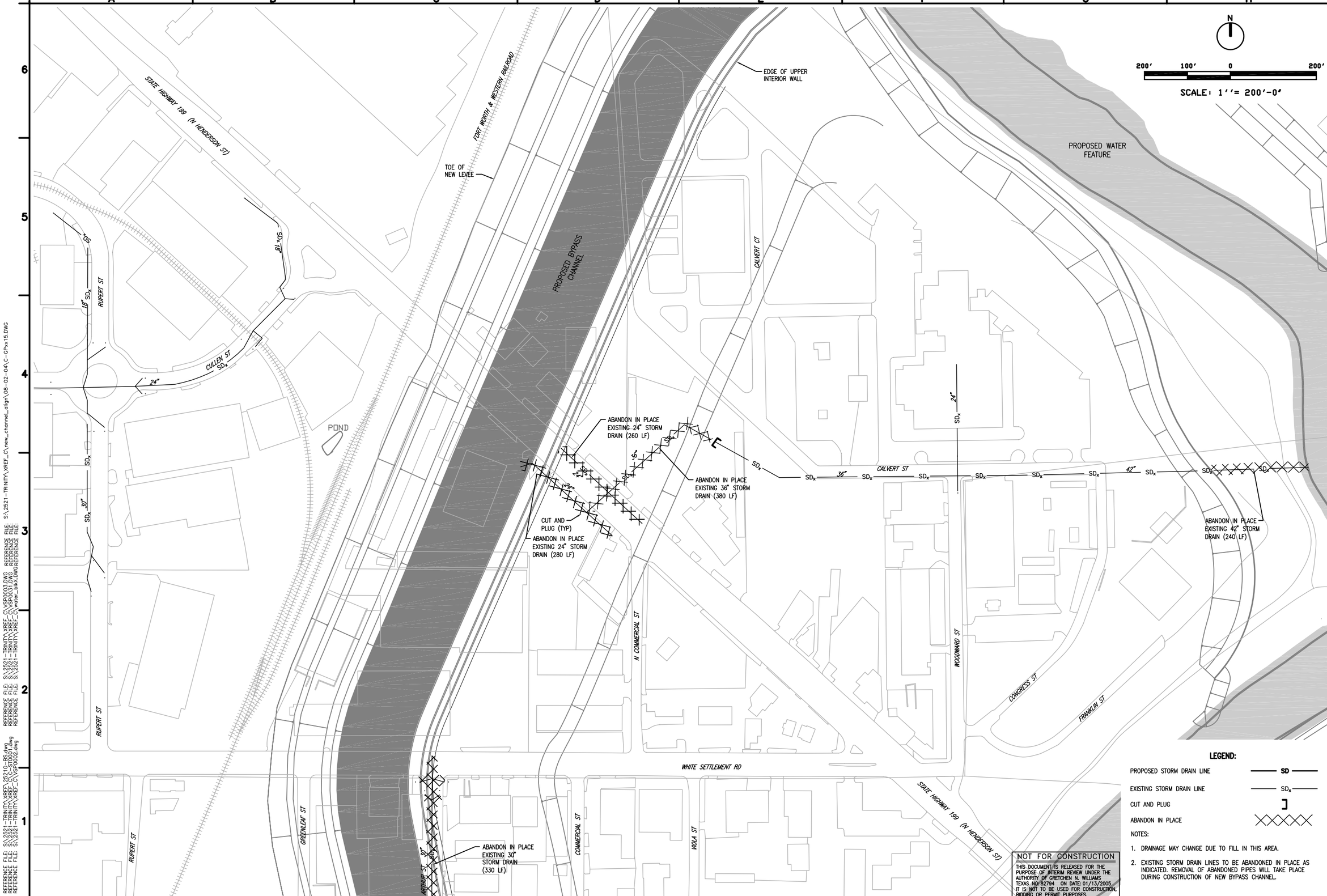


**LEGEND:**

| | |
|---|---|
| PROPOSED STORM DRAIN LINE | SD |
| EXISTING STORM DRAIN LINE | $SD_x$ |
| CUT AND PLUG | ] |
| ABANDON IN PLACE | XXXXX |

NOTES:

1. DRAINAGE MAY CHANGE DUE TO FILL IN THIS AREA.
2. EXISTING STORM DRAIN LINES TO BE ABANDONED IN PLACE AS INDICATED. REMOVAL OF ABANDONED PIPES WILL TAKE PLACE DURING CONSTRUCTION OF NEW BYPASS CHANNEL.

NOT FOR CONSTRUCTION

THIS DOCUMENT IS RELEASED FOR THE PURPOSE OF INTERIM REVIEW UNDER THE AUTHORITY OF GRETCHEN N. WILLIAMS TEXAS NO:82794 ON DATE: 01/13/2005 IT IS NOT TO BE USED FOR CONSTRUCTION, BIDDING OR PERMIT PURPOSES.

US Army Corps of Engineers
Fort Worth District

| Symbol | Description | Date |
|---|---|---|
| | | |

Designed by: G. CHIANG
Dwn by: B. LATHAM
Reviewed by: G. WILLIAMS
Submitted by: NAME TITLE
Date: JANUARY 2005
Sol No. XXXXXX
Contr No. XXXXXX
File name: XXXXX
Plot date: XXXXX
Plot scale: XXXXXX

TARRANT REGIONAL WATER DISTRICT

CDM

FORT WORTH CENTRAL CITY PRELIMINARY DESIGN

# STORM DRAINAGE PLAN III

SEQUENCE NO.
CU-ST-14



DESIGN FILE: CU114062.dwg

Contr No.

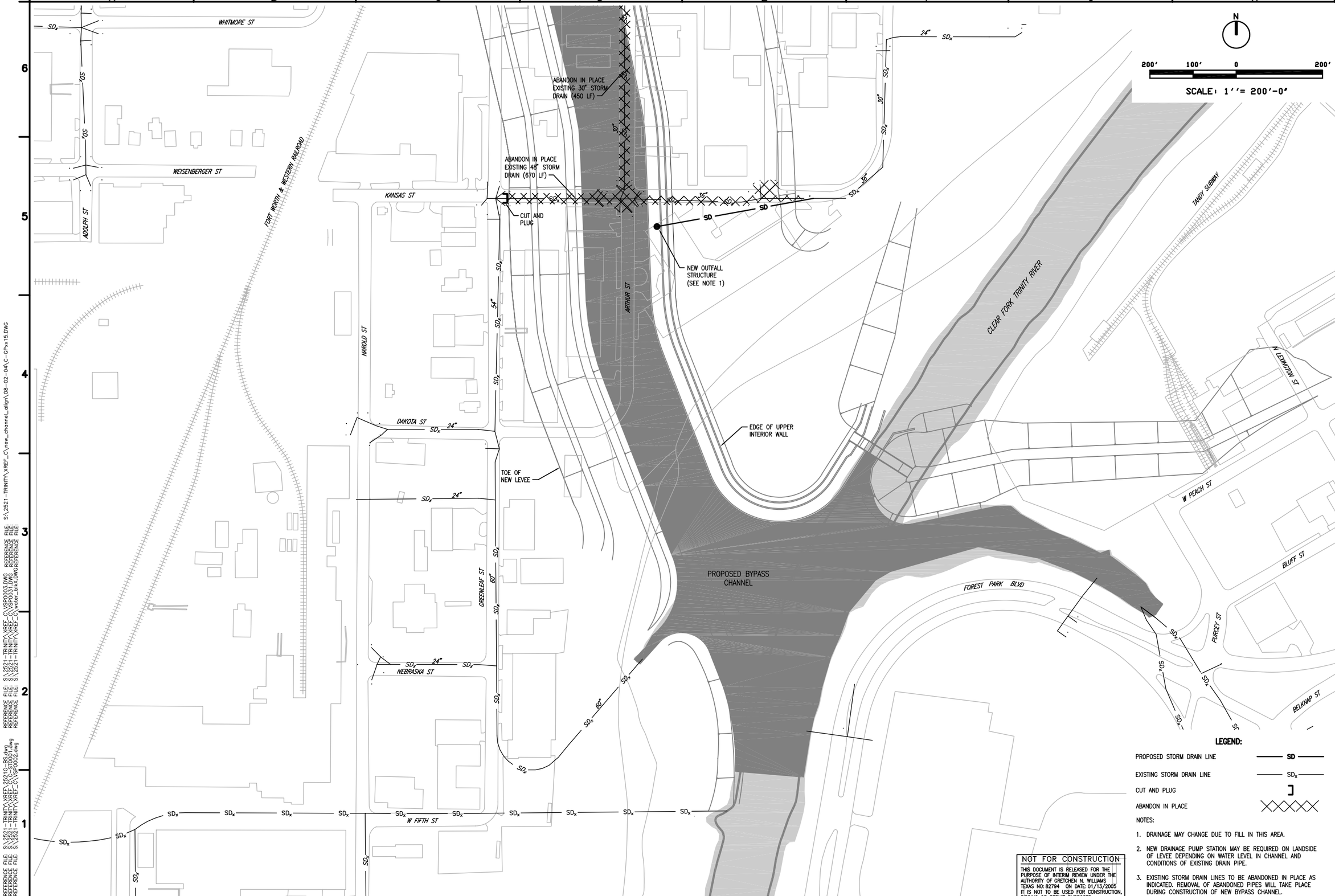


**LEGEND:**

| | |
|---|---|
| PROPOSED STORM DRAIN LINE | SD |
| EXISTING STORM DRAIN LINE | $SD_x$ |
| CUT AND PLUG | ] |
| ABANDON IN PLACE | XXXXX |

NOTES:

1. DRAINAGE MAY CHANGE DUE TO FILL IN THIS AREA.
2. NEW DRAINAGE PUMP STATION MAY BE REQUIRED ON LANDSIDE OF LEVEE DEPENDING ON WATER LEVEL IN CHANNEL AND CONDITIONS OF EXISTING DRAIN PIPE.
3. EXISTING STORM DRAIN LINES TO BE ABANDONED IN PLACE AS INDICATED. REMOVAL OF ABANDONED PIPES WILL TAKE PLACE DURING CONSTRUCTION OF NEW BYPASS CHANNEL.

NOT FOR CONSTRUCTION

THIS DOCUMENT IS RELEASED FOR THE PURPOSE OF INTERIM REVIEW UNDER THE AUTHORITY OF GRETCHEN N. WILLIAMS TEXAS NO: 82794 ON DATE: 01/13/2005 IT IS NOT TO BE USED FOR CONSTRUCTION, BIDDING OR PERMIT PURPOSES.

US Army Corps of Engineers
Fort Worth District

| Symbol | Description | Xx U.O. NO. | Xx Action | Xx Date |
|---|---|---|---|---|

Designed by: G. CHIANG
Dwn by: B. LATHAM
Reviewed by: G. WILLIAMS
Submitted by: NAME TITLE
Date: JANUARY 2005
Sol No. XXXXXX
Contr No. XXXXXX
File name: XXXXX
Plot date: XXXXX
Plot scale: XXXXXX

TARRANT REGIONAL WATER DISTRICT

CDM

FORT WORTH CENTRAL CITY PRELIMINARY DESIGN

# STORM DRAINAGE PLAN IV

SEQUENCE NO.
CU-ST-15



DESIGN FILE: CU115063.dwg

Contr No.

REFERENCE FILE: S:\2521-TRINITY\XREF\2521G-BS.dwg
REFERENCE FILE: S:\2521-TRINITY\XREF_C\C-ST0001.dwg
REFERENCE FILE: S:\2521-TRINITY\XREF_C\VSP0002.dwg
REFERENCE FILE: S:\2521-TRINITY\XREF_C\VSP0003.DWG
REFERENCE FILE: S:\2521-TRINITY\XREF_C\VSP0031.DWG
REFERENCE FILE: S:\2521-TRINITY\XREF_C\water_blkX.DWG
REFERENCE FILE: S:\2521-TRINITY\XREF_C\new_channel_align\08-02-04\C-GPxx15.DWG

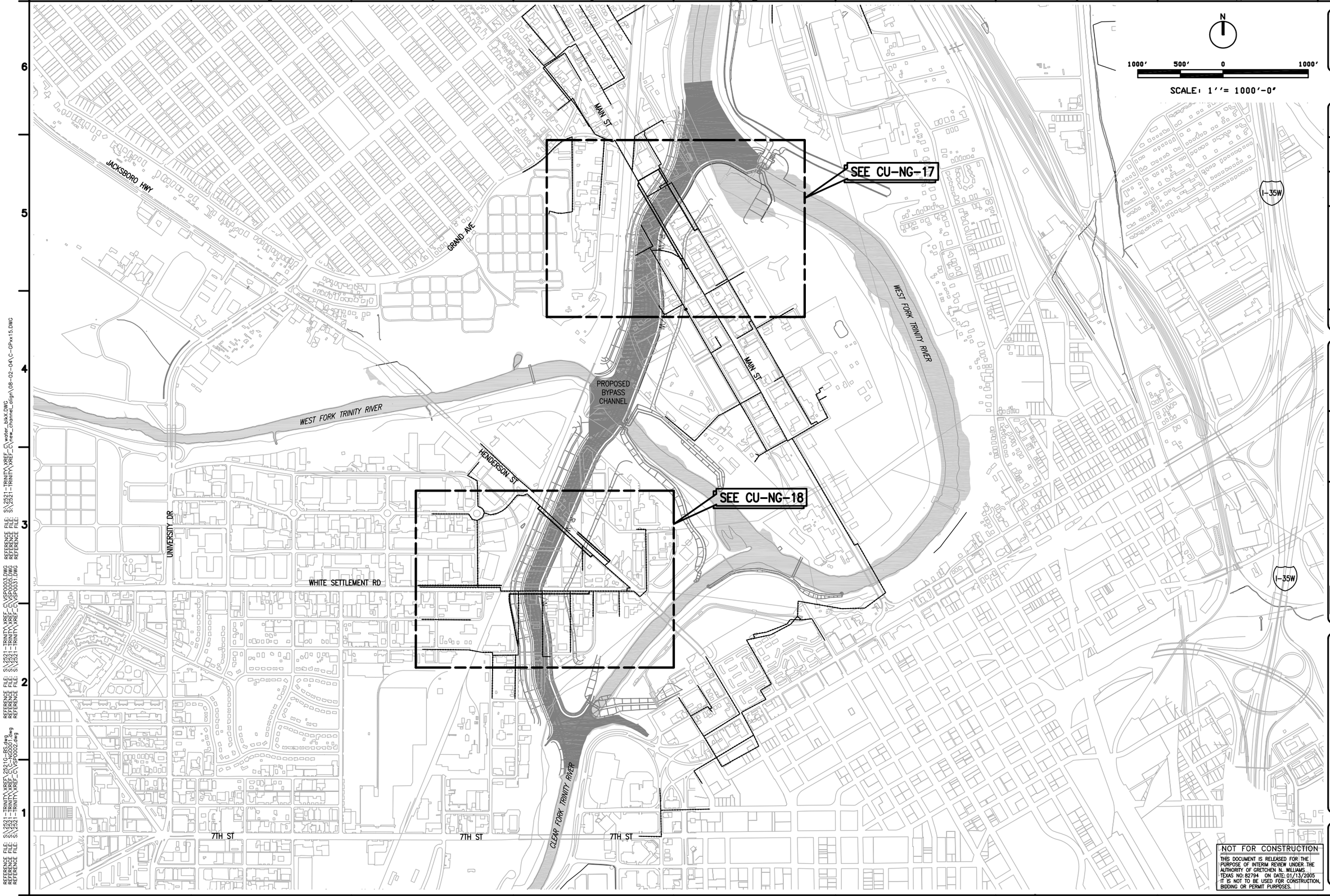


US Army Corps of Engineers
Fort Worth District

| Symbol | Description | Ex. | U.O. No. | Action | Date |
|---|---|---|---|---|---|

Designed by: G. CHIANG
Dwn by: B. LATHAM
Reviewed by: Name
Submitted by: NAME TITLE
Date: JANUARY 2005
Sol No. XXXXXX
Contr No. XXXXXX
File name: XXXXX
Plot date: XXXXX
Plot scale: XXXXXX

TARRANT REGIONAL WATER DISTRICT

CDM

FORT WORTH CENTRAL CITY PRELIMINARY DESIGN

# OVERALL NATURAL GAS PLAN

SEQUENCE NO.
CU-NG-16



NOT FOR CONSTRUCTION
THIS DOCUMENT IS RELEASED FOR THE PURPOSE OF INTERIM REVIEW UNDER THE AUTHORITY OF GRETCHEN N. WILLIAMS TEXAS NO: 82794 ON DATE: 01/13/2005 IT IS NOT TO BE USED FOR CONSTRUCTION, BIDDING OR PERMIT PURPOSES.

DESIGN FILE: CU416064.dwg

Contr No.

REFERENCE FILE: S:\2521-TRINITY\XREF\2521G-BS.dwg
REFERENCE FILE: S:\2521-TRINITY\XREF_C\C-NG0001.dwg
REFERENCE FILE: S:\2521-TRINITY\XREF_C\VSP0002.dwg
REFERENCE FILE: S:\2521-TRINITY\XREF_C\VSP0003.DWG
REFERENCE FILE: S:\2521-TRINITY\XREF_C\VSP0005.DWG
REFERENCE FILE: S:\2521-TRINITY\XREF_C\VSP0031.DWG
REFERENCE FILE: S:\2521-TRINITY\XREF_C\water_blkX.DWG
REFERENCE FILE: S:\2521-TRINITY\XREF_C\new_channel_align\08-02-04\C-GPxx15.DWG

**LEGEND:**

| | |
|---|---|
| PROPOSED NATURAL GAS LINE | —— G —— |
| EXISTING NATURAL GAS LINE | —— $G_x$ —— |
| CUT AND PLUG | ] |
| ABANDON IN PLACE | XXXXX |

NOT FOR CONSTRUCTION

THIS DOCUMENT IS RELEASED FOR THE PURPOSE OF INTERIM REVIEW UNDER THE AUTHORITY OF GRETCHEN N. WILLIAMS TEXAS NO: 82794 ON DATE: 01/13/2005 IT IS NOT TO BE USED FOR CONSTRUCTION, BIDDING OR PERMIT PURPOSES.

US Army Corps of Engineers
Fort Worth District

| Symbol | Description | Ex. | U.O. NO. | Ex. | Action | Ex. | Date |
|---|---|---|---|---|---|---|---|

Designed by: G. CHIANG
Dwn by: B. LATHAM
Reviewed by: G. WILLIAMS
Submitted by: NAME TITLE

Date: JANUARY 2005
Sol No. XXXXXX
Contr No. XXXXXX
File name: XXXXX
Plot date: XXXXX
Plot scale: XXXXXX

TARRANT REGIONAL WATER DISTRICT

CDM

FORT WORTH CENTRAL CITY PRELIMINARY DESIGN

# NATURAL GAS PLAN I

SEQUENCE NO.
CU-NG-17

Sheet 65 of 139

DESIGN FILE: CU117065.dwg

Contr No.

REFERENCE FILE: S:\2521-TRINITY\XREF\2521G-BS.dwg REFERENCE FILE: S:\2521-TRINITY\XREF_C\C-NG0001.dwg REFERENCE FILE: S:\2521-TRINITY\XREF_C\VSP0002.dwg REFERENCE FILE: S:\2521-TRINITY\XREF_C\VSP0003.DWG REFERENCE FILE: S:\2521-TRINITY\XREF_C\VSP0031.DWG REFERENCE FILE: S:\2521-TRINITY\XREF_C\water_blkX.DWG REFERENCE FILE: S:\2521-TRINITY\XREF_C\new_channel_align\08-02-04\C-GPxx15.DWG

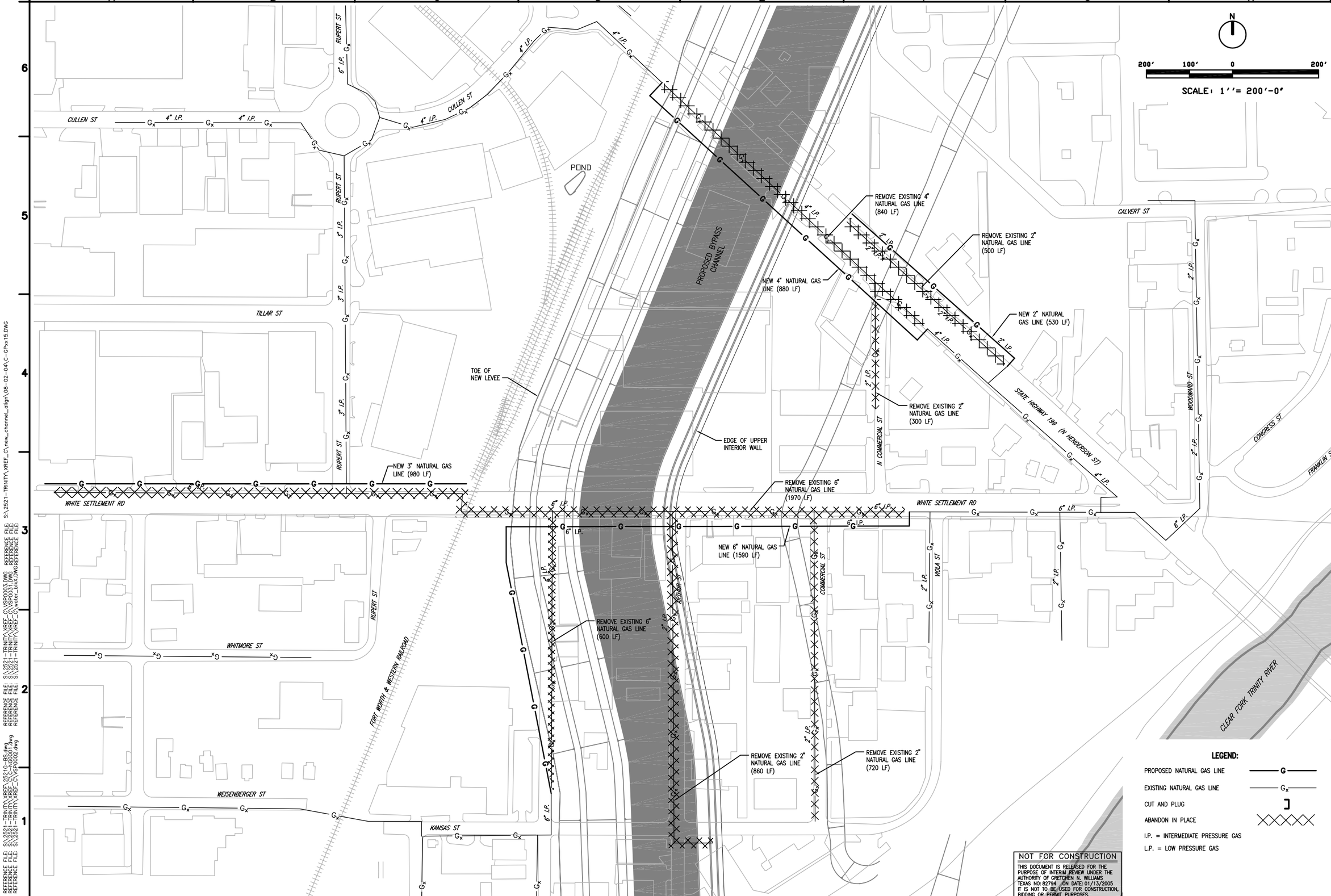


US Army Corps of Engineers
Fort Worth District

| Symbol | Description | D.O. NO. | Action | Date |
|---|---|---|---|---|
| | | xx | xx | xx |

Designed by: G. CHIANG
Dwn by: B. LATHAM
Reviewed by: Name
Submitted by: NAME TITLE
Date: JANUARY 2005
Sol No. XXXXXX
Contr No. XXXXXX
File name: XXXXX
Plot date: XXXXX
Plot scale: XXXXXX

TARRANT REGIONAL WATER DISTRICT

CDM

FORT WORTH CENTRAL CITY PRELIMINARY DESIGN

# NATURAL GAS PLAN II

SEQUENCE NO.
CU-NG-18



DESIGN FILE: CU118066.dwg

Contr No.

REFERENCE FILE: S:\2521-TRINITY\XREF\2521G-BS.dwg
REFERENCE FILE: S:\2521-TRINITY\XREF_C\C-NG0001.dwg
REFERENCE FILE: S:\2521-TRINITY\XREF_C\VSP0002.dwg
REFERENCE FILE: S:\2521-TRINITY\XREF_C\VSP0003.DWG
REFERENCE FILE: S:\2521-TRINITY\XREF_C\VSP0031.DWG
REFERENCE FILE: S:\2521-TRINITY\XREF_C\water_blkX.DWG
REFERENCE FILE: S:\2521-TRINITY\XREF_C\new_channel_align\08-02-04\C-GPxx15.DWG

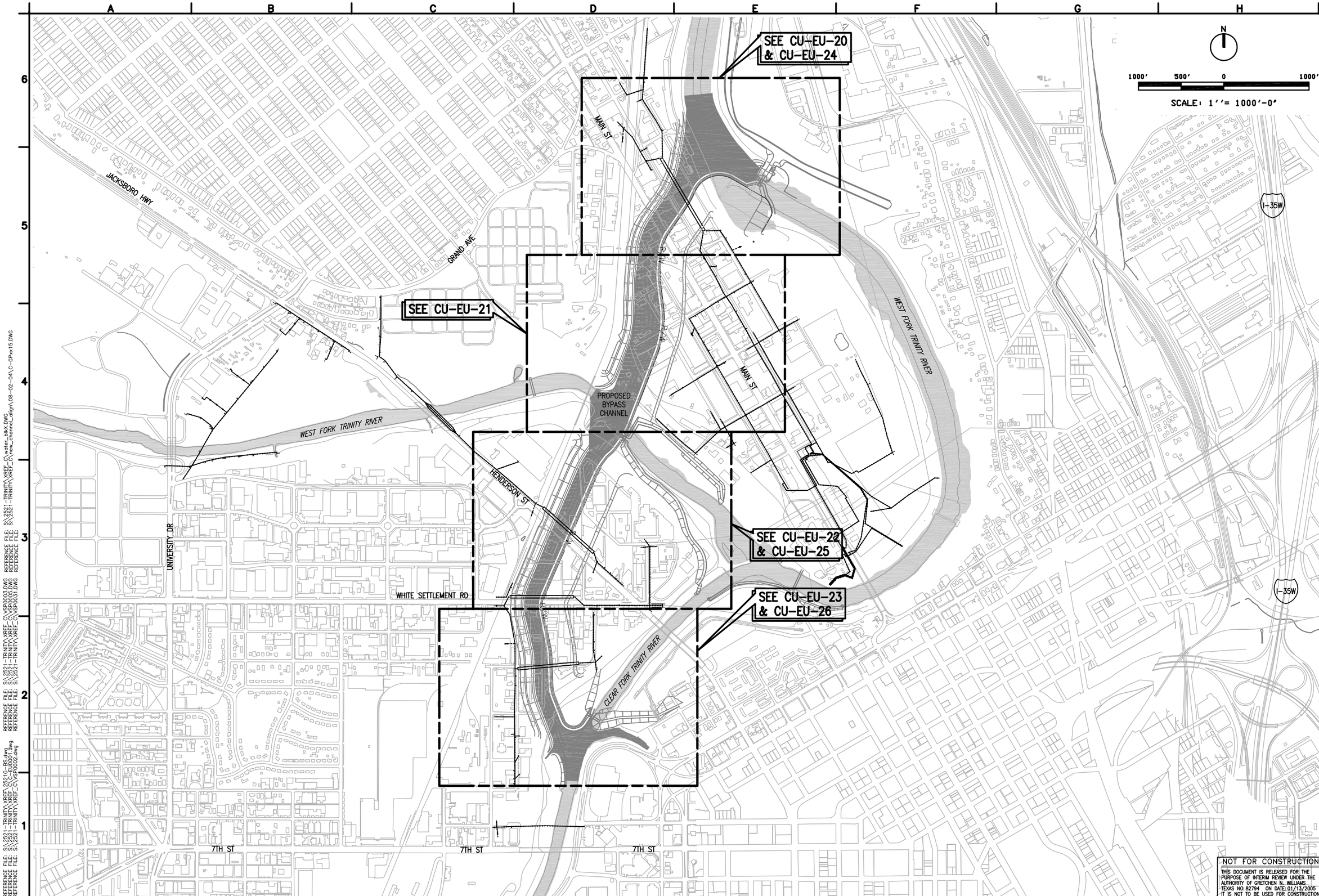


US Army Corps of Engineers
Fort Worth District

| Symbol | Description | Xx. | U.O. NO. | Xx. | Action | Date |
|---|---|---|---|---|---|---|

Designed by: B. SAKO
Dwn by: B. LATHAM
Reviewed by: G. WILLIAMS
Submitted by: NAME TITLE
Date: JANUARY 2005
Sol No. XXXXXX
Contr No. XXXXXX
File name: XXXXX
Plot date: XXXXX
Plot scale: XXXXXX

TARRANT REGIONAL WATER DISTRICT

CDM

FORT WORTH CENTRAL CITY PRELIMINARY DESIGN

# OVERALL ELECTRIC UTILITIES PLAN

SEQUENCE NO.
CU-EU-19



NOT FOR CONSTRUCTION
THIS DOCUMENT IS RELEASED FOR THE PURPOSE OF INTERIM REVIEW UNDER THE AUTHORITY OF GRETCHEN N. WILLIAMS TEXAS NO: 82794 ON DATE: 01/13/2005 IT IS NOT TO BE USED FOR CONSTRUCTION, BIDDING OR PERMIT PURPOSES.

DESIGN FILE: CU419067.dwg

Contr No.

REFERENCE FILE: S:\2521-TRINITY\XREF\2521G-BS.dwg
REFERENCE FILE: S:\2521-TRINITY\XREF_C\C-EU0001.dwg
REFERENCE FILE: S:\2521-TRINITY\XREF_C\VSP0002.dwg
REFERENCE FILE: S:\2521-TRINITY\XREF_C\VSP0003.DWG
REFERENCE FILE: S:\2521-TRINITY\XREF_C\VSP0005.DWG
REFERENCE FILE: S:\2521-TRINITY\XREF_C\VSP0031.DWG
REFERENCE FILE: S:\2521-TRINITY\XREF_C\water_blkX.DWG
REFERENCE FILE: S:\2521-TRINITY\XREF_C\new_channel_align\08-02-04\C-GPxx15.DWG

US Army Corps of Engineers
Fort Worth District

| Symbol | Description | By | Action | Date |
|---|---|---|---|---|

Designed by: B. SAKO
Date: JANUARY 2005
Dwn by: B. LATHAM
Sol No. XXXXXX
Reviewed by: G. WILLIAMS
Contr No. XXXXXX
Submitted by: NAME TITLE
File name: XXXXX
Plot date: XXXXX
Plot scale: XXXXXX

TARRANT REGIONAL WATER DISTRICT

CDM

FORT WORTH CENTRAL CITY PRELIMINARY DESIGN

# ELECTRIC UTILITIES PLAN I DEMOLITION

SEQUENCE NO.
CU-EU-20

Sheet 68 of 139

NOT FOR CONSTRUCTION

THIS DOCUMENT IS RELEASED FOR THE PURPOSE OF INTERIM REVIEW UNDER THE AUTHORITY OF GRETCHEN N. WILLIAMS TEXAS NO:82794 ON DATE:01/13/2005 IT IS NOT TO BE USED FOR CONSTRUCTION, BIDDING OR PERMIT PURPOSES.

DESIGN FILE: CU720068.dwg

Contr No.

REFERENCE FILE: S:\2521-TRINITY\XREF_C\water_blkX.DWG
REFERENCE FILE: S:\2521-TRINITY\XREF_C\new_channel_align\08-02-04\C-GPx15.DWG
REFERENCE FILE: S:\2521-TRINITY\XREF_C\wht_set_RO.DWG
REFERENCE FILE: S:\2521-TRINITY\XREF_C\VSP0003.DWG
REFERENCE FILE: S:\2521-TRINITY\XREF_C\VSP0005.DWG
REFERENCE FILE: S:\2521-TRINITY\XREF_C\VSP0031.DWG
REFERENCE FILE: S:\2521-TRINITY\XREF_C\VSP0002.dwg
REFERENCE FILE: S:\2521-TRINITY\XREF_2521G-BS.dwg
REFERENCE FILE: S:\2521-TRINITY\XREF_C\C-EU0001.dwg

SCALE: 1'' = 200'-0"

200' 100' 0 200'

LEGEND:

EXISTING ELECTRICAL LINE

US Army Corps of Engineers
Fort Worth District

| Symbol | Description | D.O. NO. | Action | Date |
|---|---|---|---|---|
| | | xx | xx | xx |

TARRANT REGIONAL WATER DISTRICT

CDM

Designed by: B. SAKO
Dwn by: B. LATHAM
Reviewed by: G. WILLIAMS
Submitted by: NAME TITLE

Date: JANUARY 2005
Sol No. XXXXXX
Contr No. XXXXXX
File name: XXXXX
Plot date: XXXXX
Plot scale: XXXXXX

FORT WORTH CENTRAL CITY PRELIMINARY DESIGN

# ELECTRIC UTILITIES PLAN II DEMOLITION

SEQUENCE NO.
CU-EU-21

Sheet 69 of 139

NOT FOR CONSTRUCTION

THIS DOCUMENT IS RELEASED FOR THE PURPOSE OF INTERIM REVIEW UNDER THE AUTHORITY OF GRETCHEN N. WILLIAMS TEXAS NO: 82794 ON DATE: 01/13/2005 IT IS NOT TO BE USED FOR CONSTRUCTION, BIDDING OR PERMIT PURPOSES.

DESIGN FILE: CU721069.dwg

Contr No.

REFERENCE FILE: S:\2521-TRINITY\XREF\2521G-BS.dwg
REFERENCE FILE: S:\2521-TRINITY\XREF_C\C-EU0001.dwg
REFERENCE FILE: S:\2521-TRINITY\XREF_C\VSP0002.dwg
REFERENCE FILE: S:\2521-TRINITY\XREF_C\VSP0003.DWG
REFERENCE FILE: S:\2521-TRINITY\XREF_C\VSP0005.DWG
REFERENCE FILE: S:\2521-TRINITY\XREF_C\VSP0031.DWG
REFERENCE FILE: S:\2521-TRINITY\XREF_C\water_blkX.DWG
REFERENCE FILE: S:\2521-TRINITY\XREF_C\new_channel_align\08-02-04\C-GPxx15.DWG
REFERENCE FILE: S:\2521-TRINITY\XREF_C\whit_set_RD.DWG

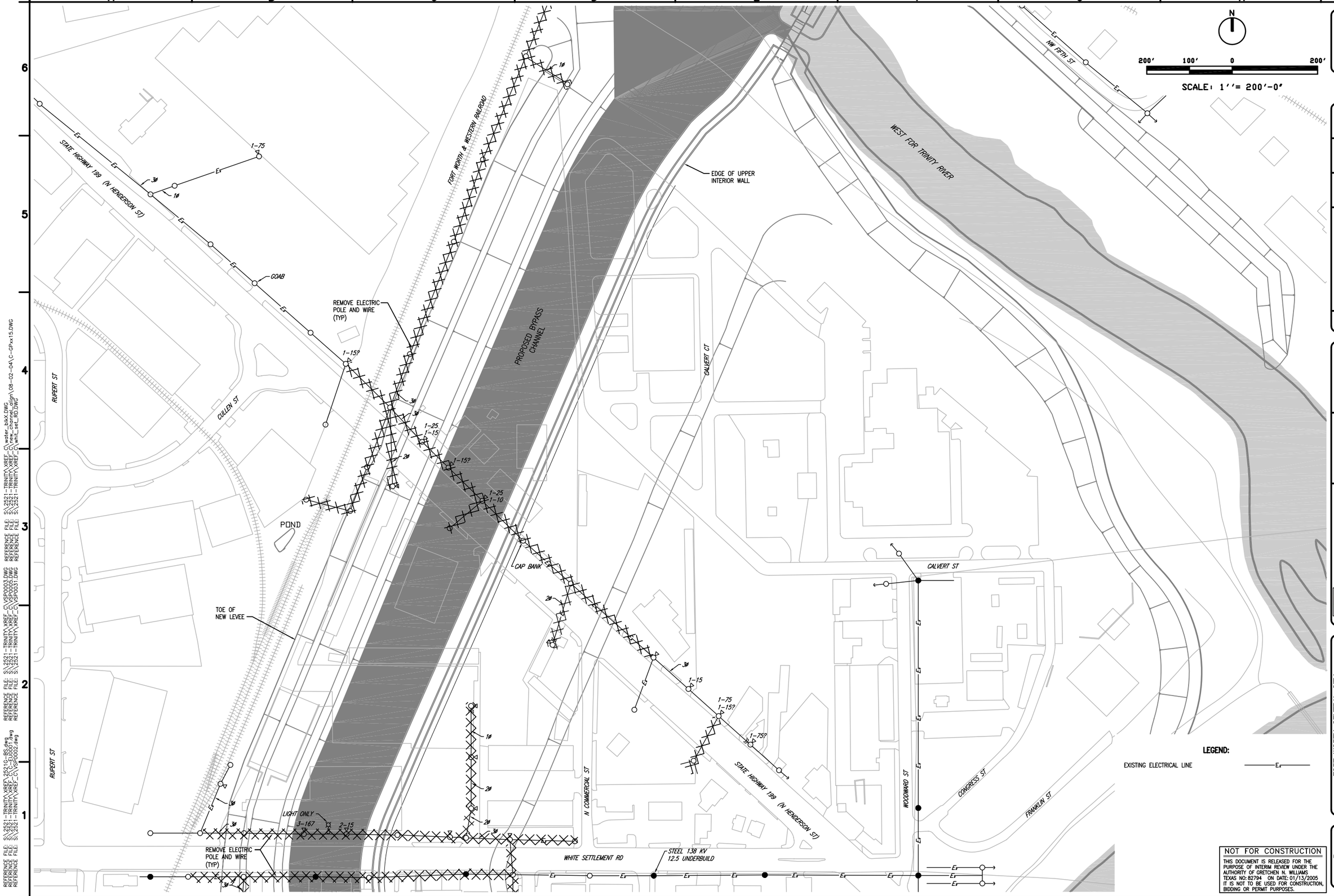


US Army Corps of Engineers
Fort Worth District

| Symbol | Description | Date | Action | Date |
|---|---|---|---|---|

TARRANT REGIONAL WATER DISTRICT

CDM

Designed by: B. SAKO
Dwn by: B. LATHAM
Reviewed by: G. WILLIAMS
Submitted by: NAME TITLE
Date: JANUARY 2005
Sol No. XXXXXX
Contr No. XXXXXX
File name: XXXXX
Plot date: XXXXX
Plot scale: XXXXXX

FORT WORTH CENTRAL CITY PRELIMINARY DESIGN

# ELECTRIC UTILITIES PLAN III DEMOLITION

SEQUENCE NO.
CU-EU-22



NOT FOR CONSTRUCTION

THIS DOCUMENT IS RELEASED FOR THE PURPOSE OF INTERIM REVIEW UNDER THE AUTHORITY OF GRETCHEN N. WILLIAMS TEXAS NO: 82794 ON DATE: 01/13/2005 IT IS NOT TO BE USED FOR CONSTRUCTION, BIDDING OR PERMIT PURPOSES.

DESIGN FILE: CU722070.dwg

Contr No.

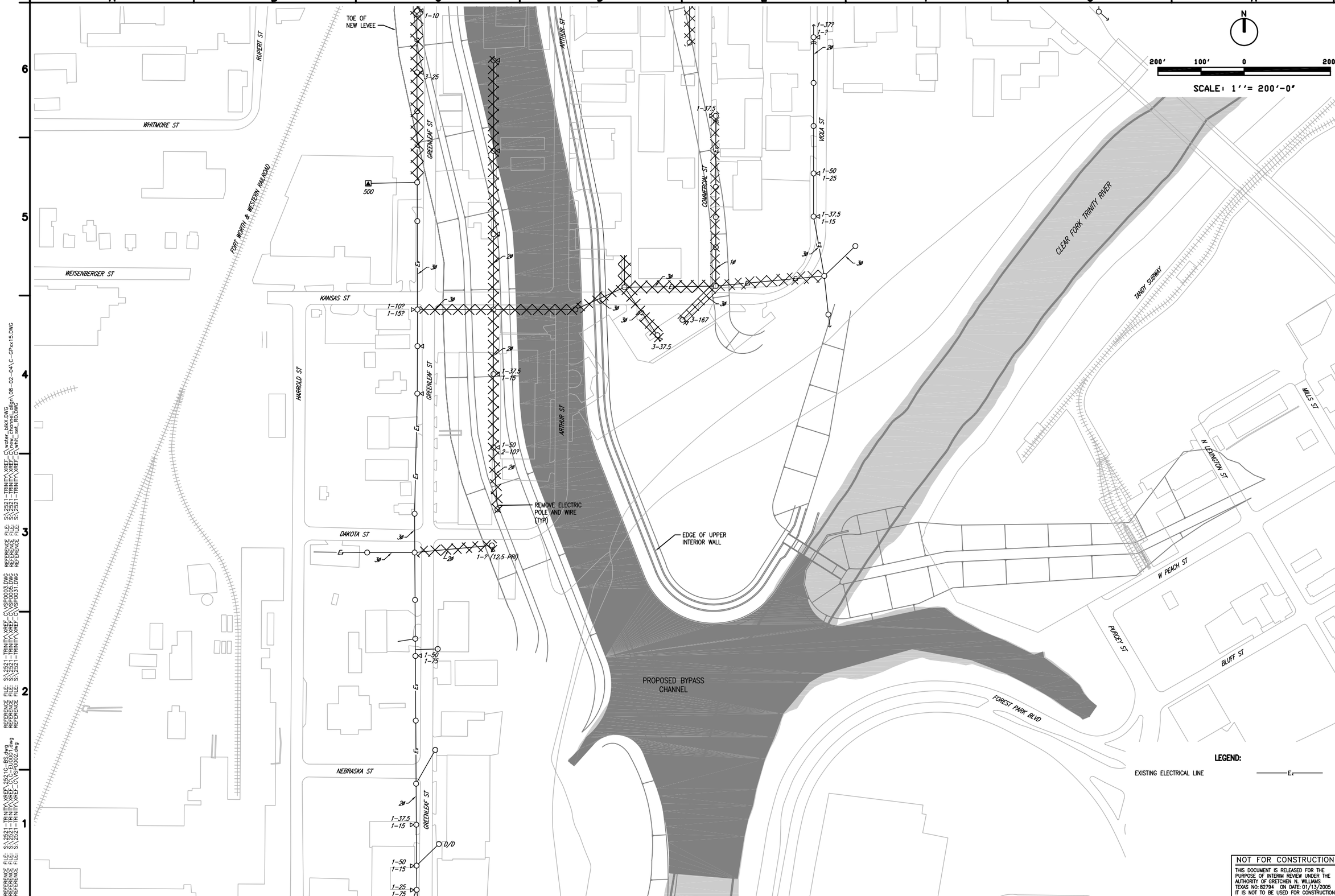


N

200' 100' 0 200'

SCALE: 1''= 200'-0"

LEGEND:

EXISTING ELECTRICAL LINE

US Army Corps of Engineers
Fort Worth District

| Symbol | Description | Date | Action | Date |
|---|---|---|---|---|
| | | | | |

Designed by: B. SAKO
Dwn by: B. LATHAM
Reviewed by: G. WILLIAMS
Submitted by: NAME TITLE

Date: JANUARY 2005
Sol No. XXXXXX
Contr No. XXXXXX
File name: XXXXX
Plot date: XXXXX
Plot scale: XXXXXX

TARRANT REGIONAL WATER DISTRICT

CDM

FORT WORTH CENTRAL CITY PRELIMINARY DESIGN

# ELECTRIC UTILITIES PLAN IV DEMOLITION

SEQUENCE NO.
CU-EU-23



NOT FOR CONSTRUCTION

THIS DOCUMENT IS RELEASED FOR THE PURPOSE OF INTERIM REVIEW UNDER THE AUTHORITY OF GRETCHEN N. WILLIAMS TEXAS NO: 82794 ON DATE: 01/13/2005 IT IS NOT TO BE USED FOR CONSTRUCTION, BIDDING OR PERMIT PURPOSES.

DESIGN FILE: CU723071.dwg

Contr No.

REFERENCE FILE: S:\2521-TRINITY\XREF\2521G-BS.dwg
REFERENCE FILE: S:\2521-TRINITY\XREF_C\C-EU0001.dwg
REFERENCE FILE: S:\2521-TRINITY\XREF_C\VSP0002.dwg
REFERENCE FILE: S:\2521-TRINITY\XREF_C\VSP0003.DWG
REFERENCE FILE: S:\2521-TRINITY\XREF_C\VSP0005.DWG
REFERENCE FILE: S:\2521-TRINITY\XREF_C\VSP0031.DWG
REFERENCE FILE: S:\2521-TRINITY\XREF_C\water_blkX.DWG
REFERENCE FILE: S:\2521-TRINITY\XREF_C\new_channel_align\08-02-04\C-GPxx15.DWG
REFERENCE FILE: S:\2521-TRINITY\XREF_C\whit_set_RD.DWG

US Army Corps of Engineers
Fort Worth District

| Symbol | Description | By | Date | Action | Ck |
|---|---|---|---|---|---|

Designed by: B. SAKO
Date: JANUARY 2005
Dwn by: B. LATHAM
Sol No. XXXXXX
Reviewed by: G. WILLIAMS
Contr No. XXXXXX
Submitted by: NAME TITLE
File name: XXXXX
Plot date: XXXXX
Plot scale: XXXXXX

TARRANT REGIONAL WATER DISTRICT

CDM

FORT WORTH CENTRAL CITY PRELIMINARY DESIGN

# ELECTRIC UTILITIES PLAN V MODIFICATIONS

SEQUENCE NO.
CU-EU-24

Sheet 72 of 139

NOT FOR CONSTRUCTION

THIS DOCUMENT IS RELEASED FOR THE PURPOSE OF INTERIM REVIEW UNDER THE AUTHORITY OF GRETCHEN N. WILLIAMS TEXAS NO: 82794 ON DATE: 01/13/2005 IT IS NOT TO BE USED FOR CONSTRUCTION, BIDDING OR PERMIT PURPOSES.

DESIGN FILE: CU124072.dwg

Contr No.

REFERENCE FILE: S:\2521-TRINITY\XREF_C\water_blkX.DWG
REFERENCE FILE: S:\2521-TRINITY\XREF_C\new_channel_align\08-02-04\C-GPx15.DWG
REFERENCE FILE: S:\2521-TRINITY\XREF_C\wht_set_RO.DWG
REFERENCE FILE: S:\2521-TRINITY\XREF_C\SP0003.DWG
REFERENCE FILE: S:\2521-TRINITY\XREF_C\SP0005.DWG
REFERENCE FILE: S:\2521-TRINITY\XREF_C\SP0031.DWG
REFERENCE FILE: S:\2521-TRINITY\XREF_C\SP0002.dwg
REFERENCE FILE: S:\2521-TRINITY\XREF\2521G-BS.dwg
REFERENCE FILE: S:\2521-TRINITY\XREF_C\C-EU0001.dwg

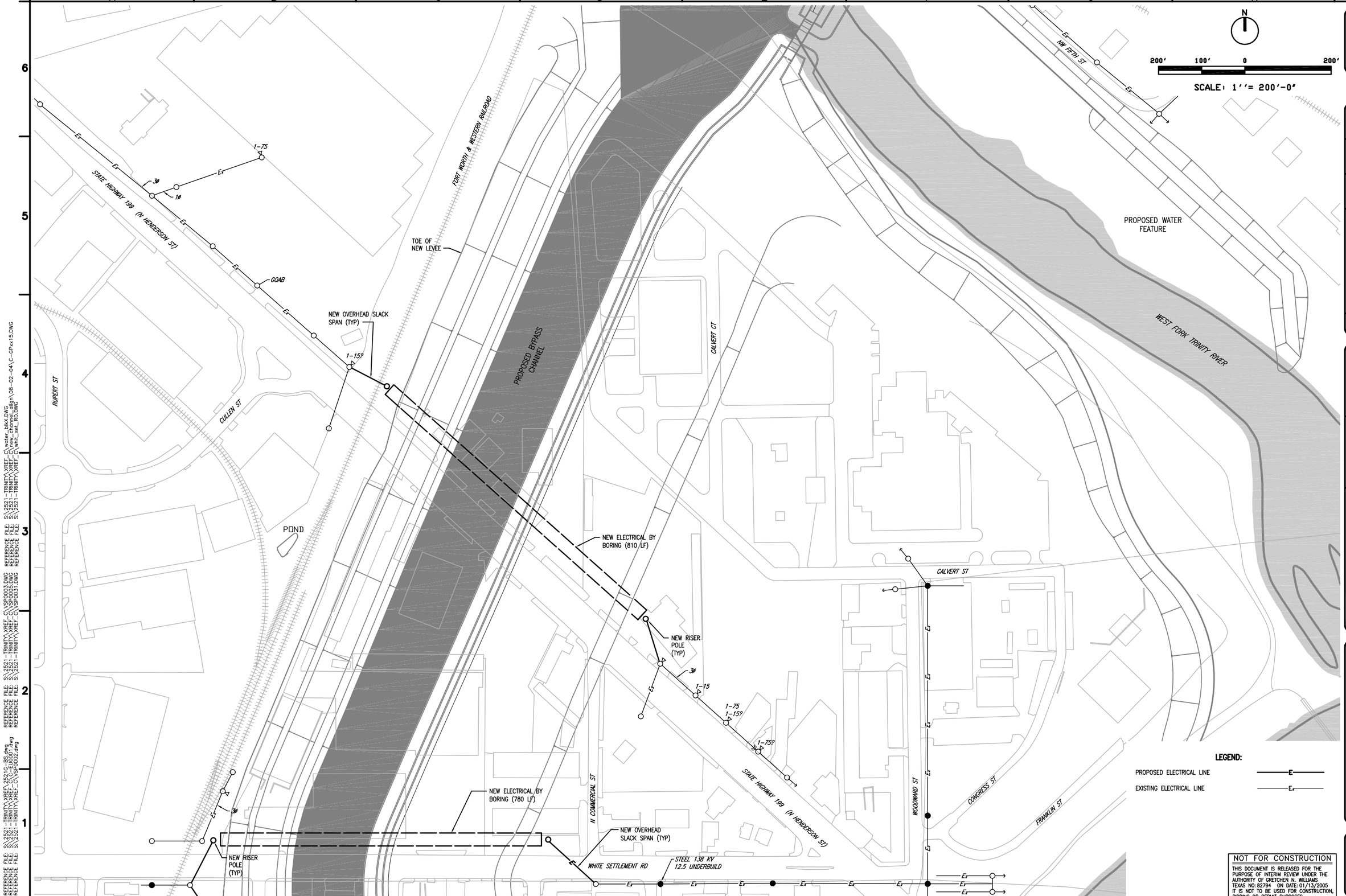


NOT FOR CONSTRUCTION

THIS DOCUMENT IS RELEASED FOR THE PURPOSE OF INTERIM REVIEW UNDER THE AUTHORITY OF GRETCHEN N. WILLIAMS TEXAS NO: 82794 ON DATE: 01/13/2005 IT IS NOT TO BE USED FOR CONSTRUCTION, BIDDING OR PERMIT PURPOSES.

| Symbol | Description | By | Appr. No. | By | Action | Date |
|---|---|---|---|---|---|---|

TARRANT REGIONAL WATER DISTRICT

CDM

Designed by: B. SAKO
Dwn by: B. LATHAM
Reviewed by: G. WILLIAMS
Submitted by: NAME TITLE

Date: JANUARY 2005
Sol No. XXXXXX
Contr No. XXXXXX
File name: XXXXX
Plot date: XXXXX
Plot scale: XXXXXX

FORT WORTH CENTRAL CITY PRELIMINARY DESIGN

# ELECTRIC UTILITIES PLAN VI MODIFICATIONS

SEQUENCE NO.
CU-EU-25



DESIGN FILE: CU125073.dwg

Contr No.

REFERENCE FILE: S:\2521-TRINITY\XREF\2521G-BS.dwg
REFERENCE FILE: S:\2521-TRINITY\XREF_CV\C-EU0001.dwg
REFERENCE FILE: S:\2521-TRINITY\XREF_CV\VSP0002.dwg
REFERENCE FILE: S:\2521-TRINITY\XREF_CV\VSP0003.DWG
REFERENCE FILE: S:\2521-TRINITY\XREF_CV\VSP0005.DWG
REFERENCE FILE: S:\2521-TRINITY\XREF_CV\VSP0031.DWG
REFERENCE FILE: S:\2521-TRINITY\XREF_CV\water_blkX.DWG
REFERENCE FILE: S:\2521-TRINITY\XREF_CV\new_channel_align\08-02-04\C-GPx15.DWG
REFERENCE FILE: S:\2521-TRINITY\XREF_CV\wht_set_RD.DWG

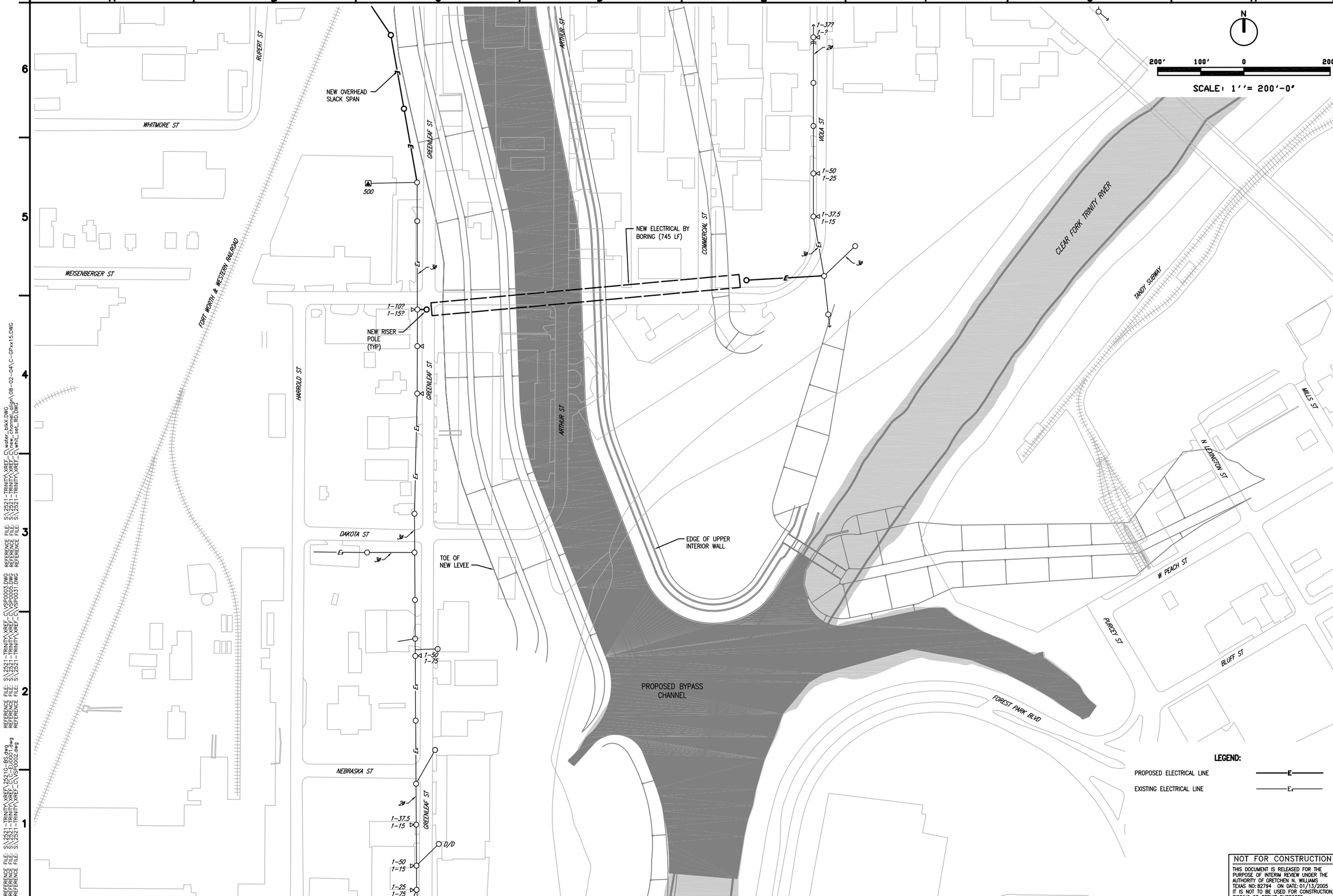


NOT FOR CONSTRUCTION

THIS DOCUMENT IS RELEASED FOR THE PURPOSE OF INTERIM REVIEW UNDER THE AUTHORITY OF GRETCHEN N. WILLIAMS TEXAS NO: 82794 ON DATE: 01/13/2005 IT IS NOT TO BE USED FOR CONSTRUCTION, BIDDING OR PERMIT PURPOSES.

| Symbol | Description | By | Appr. No. | By | Action | Date |
|---|---|---|---|---|---|---|

TARRANT REGIONAL WATER DISTRICT

CDM

Designed by: B. SAKO
Dwn by: B. LATHAM
Reviewed by: G. WILLIAMS
Submitted by: NAME TITLE

Date: JANUARY 2005
Sol No. XXXXXX
Contr. No. XXXXXX
File name: XXXXX
Plot date: XXXXX
Plot scale: XXXXXX

FORT WORTH CENTRAL CITY PRELIMINARY DESIGN

# ELECTRIC UTILITIES PLAN VII MODIFICATIONS

SEQUENCE NO.
CU-EU-26



DESIGN FILE: CU126074.dwg

Contr. No.

REFERENCE FILE: S:\2521-TRINITY\XREF\2521G-BS.dwg
REFERENCE FILE: S:\2521-TRINITY\XREF_C\G-EU0001.dwg
REFERENCE FILE: S:\2521-TRINITY\XREF_C\VSP0002.dwg
REFERENCE FILE: S:\2521-TRINITY\XREF_C\VSP0003.DWG
REFERENCE FILE: S:\2521-TRINITY\XREF_C\VSP0005.DWG
REFERENCE FILE: S:\2521-TRINITY\XREF_C\VSP0031.DWG
REFERENCE FILE: S:\2521-TRINITY\XREF_C\water_blkX.DWG
REFERENCE FILE: S:\2521-TRINITY\XREF_C\C\new_channel_align\08-02-04\C-GPx15.DWG
REFERENCE FILE: S:\2521-TRINITY\XREF_C\whit_set_RD.DWG

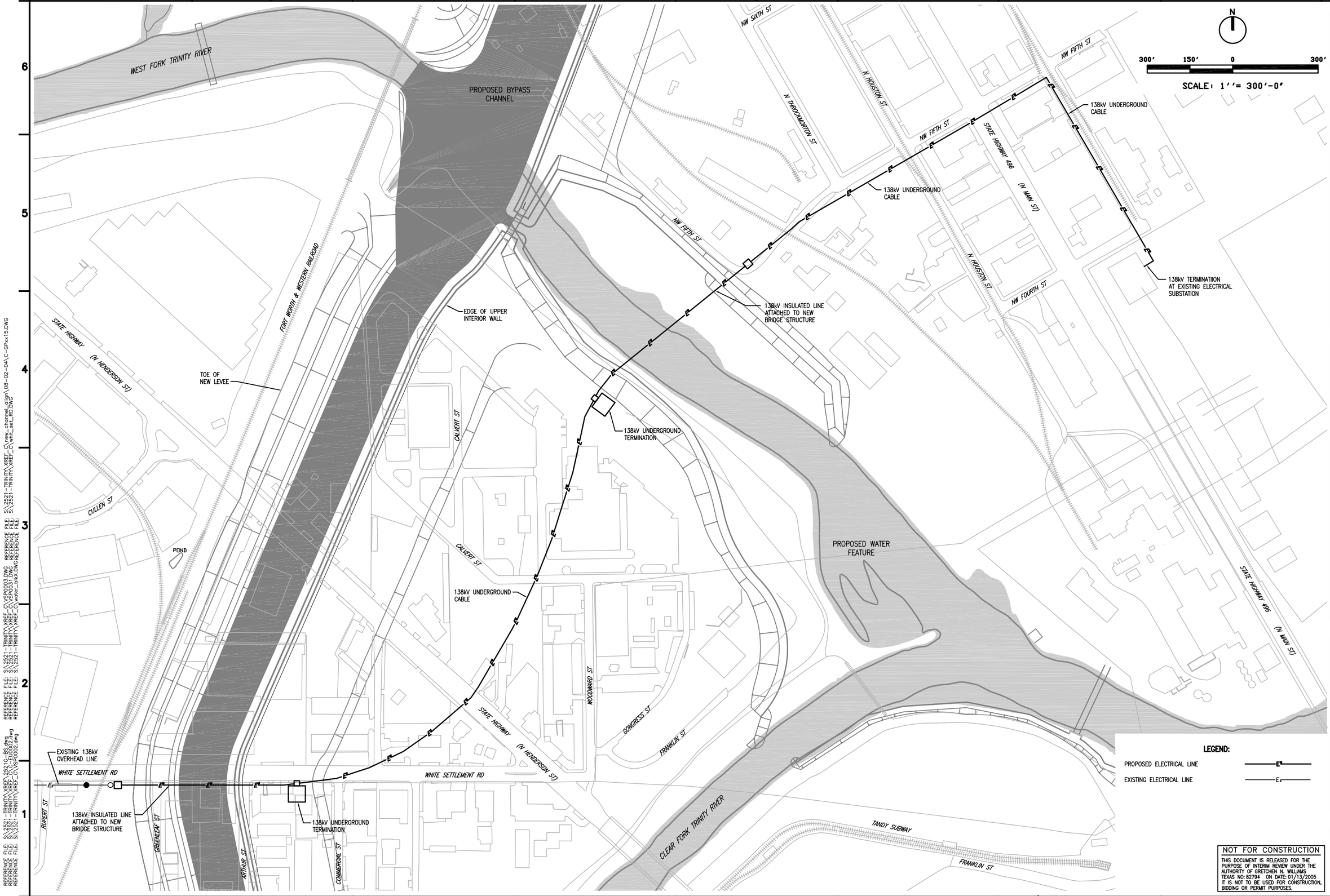


US Army Corps of Engineers
Fort Worth District

| Symbol | Description | Date | Action | Date |
|---|---|---|---|---|
| | | | | |

Designed by: B. SAKO
Dwn by: B. LATHAM
Reviewed by: G. WILLIAMS
Submitted by: NAME TITLE
Date: JANUARY 2005
Sol No. XXXXXX
Contr No. XXXXXX
File name: XXXXX
Plot date: XXXXX
Plot scale: XXXXXX

TARRANT REGIONAL WATER DISTRICT

CDM

FORT WORTH CENTRAL CITY PRELIMINARY DESIGN

# ELECTRIC UTILITIES PLAN VIII TRANSMISSION LINES

NOT FOR CONSTRUCTION

THIS DOCUMENT IS RELEASED FOR THE PURPOSE OF INTERIM REVIEW UNDER THE AUTHORITY OF GRETCHEN N. WILLIAMS TEXAS NO: 82794 ON DATE: 01/13/2005 IT IS NOT TO BE USED FOR CONSTRUCTION, BIDDING OR PERMIT PURPOSES.

SEQUENCE NO.
CU-EU-27



DESIGN FILE: CU127075.dwg

Contr No.

REFERENCE FILE: S:\2521-TRINITY\XREF\2521G-BS.dwg
REFERENCE FILE: S:\2521-TRINITY\XREF_C\C-EU0002.dwg
REFERENCE FILE: S:\2521-TRINITY\XREF_C\VSP0002.dwg
REFERENCE FILE: S:\2521-TRINITY\XREF_C\VSP0003.DWG
REFERENCE FILE: S:\2521-TRINITY\XREF_C\VSP0031.DWG
REFERENCE FILE: S:\2521-TRINITY\XREF_C\water_bikX.DWG
REFERENCE FILE: S:\2521-TRINITY\XREF_C\new_channel_align\08-02-04\C-GPxx15.DWG
REFERENCE FILE: S:\2521-TRINITY\XREF_C\whit_set_RD.DWG

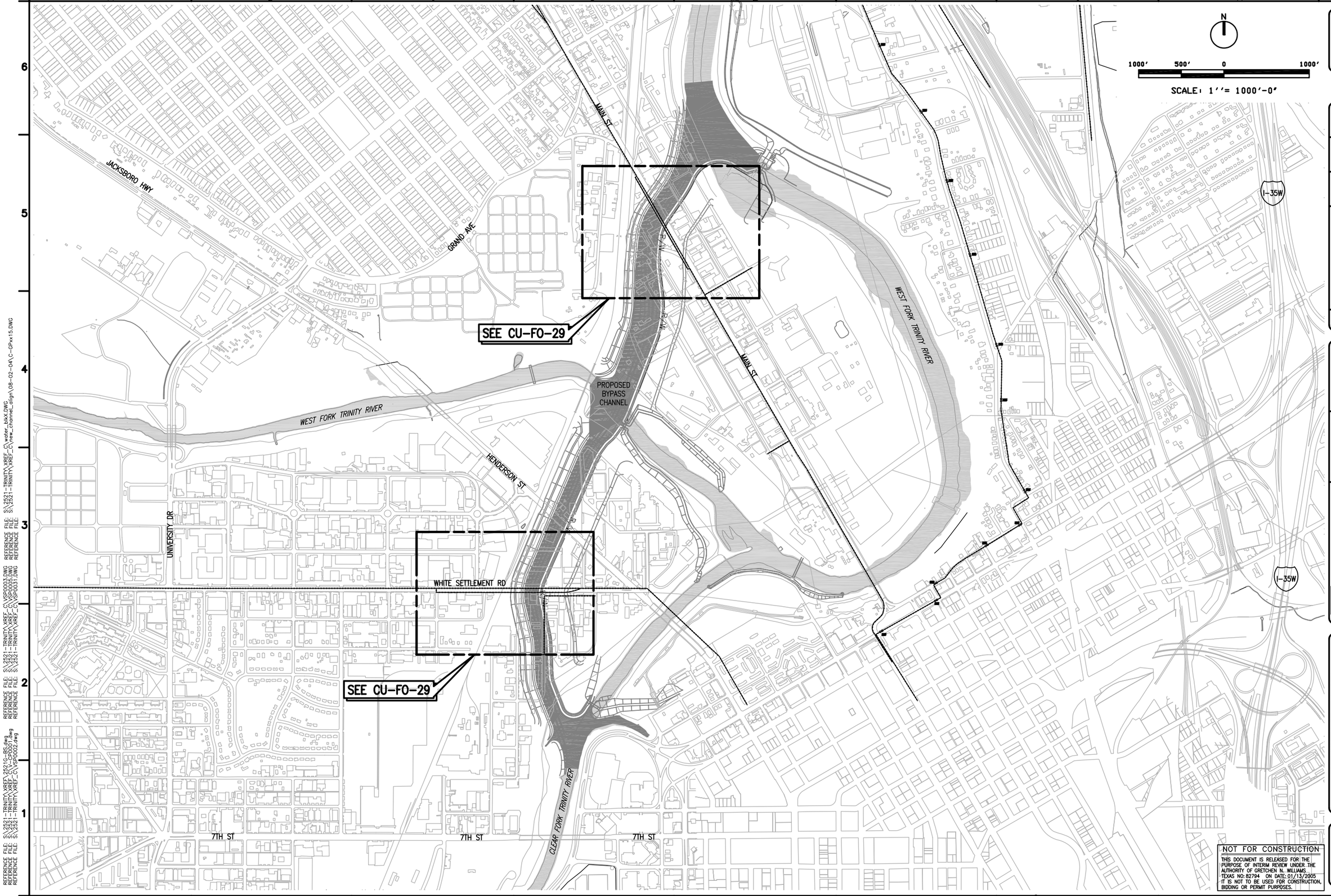


US Army Corps of Engineers
Fort Worth District

| Symbol | Description | Ex. | U.S. NO. | Action | Date |
|---|---|---|---|---|---|

TARRANT REGIONAL WATER DISTRICT

CDM

Designed by: G. CHIANG
Dwn by: B. LATHAM
Reviewed by: Name
Submitted by: NAME TITLE

Date: JANUARY 2005
Sol No. XXXXXX
Contr No. XXXXXX
File name: XXXXX
Plot date: XXXXX
Plot scale: XXXXXX

DESIGN FILE: CU428076.dwg

FORT WORTH CENTRAL CITY PRELIMINARY DESIGN

# OVERALL FIBEROPTICS PLAN

SEQUENCE NO.
CU-FO-28

Sheet 76 of 139

NOT FOR CONSTRUCTION

THIS DOCUMENT IS RELEASED FOR THE PURPOSE OF INTERIM REVIEW UNDER THE AUTHORITY OF GRETCHEN N. WILLIAMS TEXAS NO: 82794 ON DATE: 01/13/2005 IT IS NOT TO BE USED FOR CONSTRUCTION, BIDDING OR PERMIT PURPOSES.

Contr No.

REFERENCE FILE: S:\2521-TRINITY\XREF\2521G-BS.dwg
REFERENCE FILE: S:\2521-TRINITY\XREF_C\V-CP0001.dwg
REFERENCE FILE: S:\2521-TRINITY\XREF_C\VSP0002.dwg
REFERENCE FILE: S:\2521-TRINITY\XREF_C\VSP0003.DWG
REFERENCE FILE: S:\2521-TRINITY\XREF_C\VSP0005.DWG
REFERENCE FILE: S:\2521-TRINITY\XREF_C\VSP0031.DWG
REFERENCE FILE: S:\2521-TRINITY\XREF_C\water_blkX.DWG
REFERENCE FILE: S:\2521-TRINITY\XREF_C\new_channel_align\08-02-04\C-GPxx15.DWG

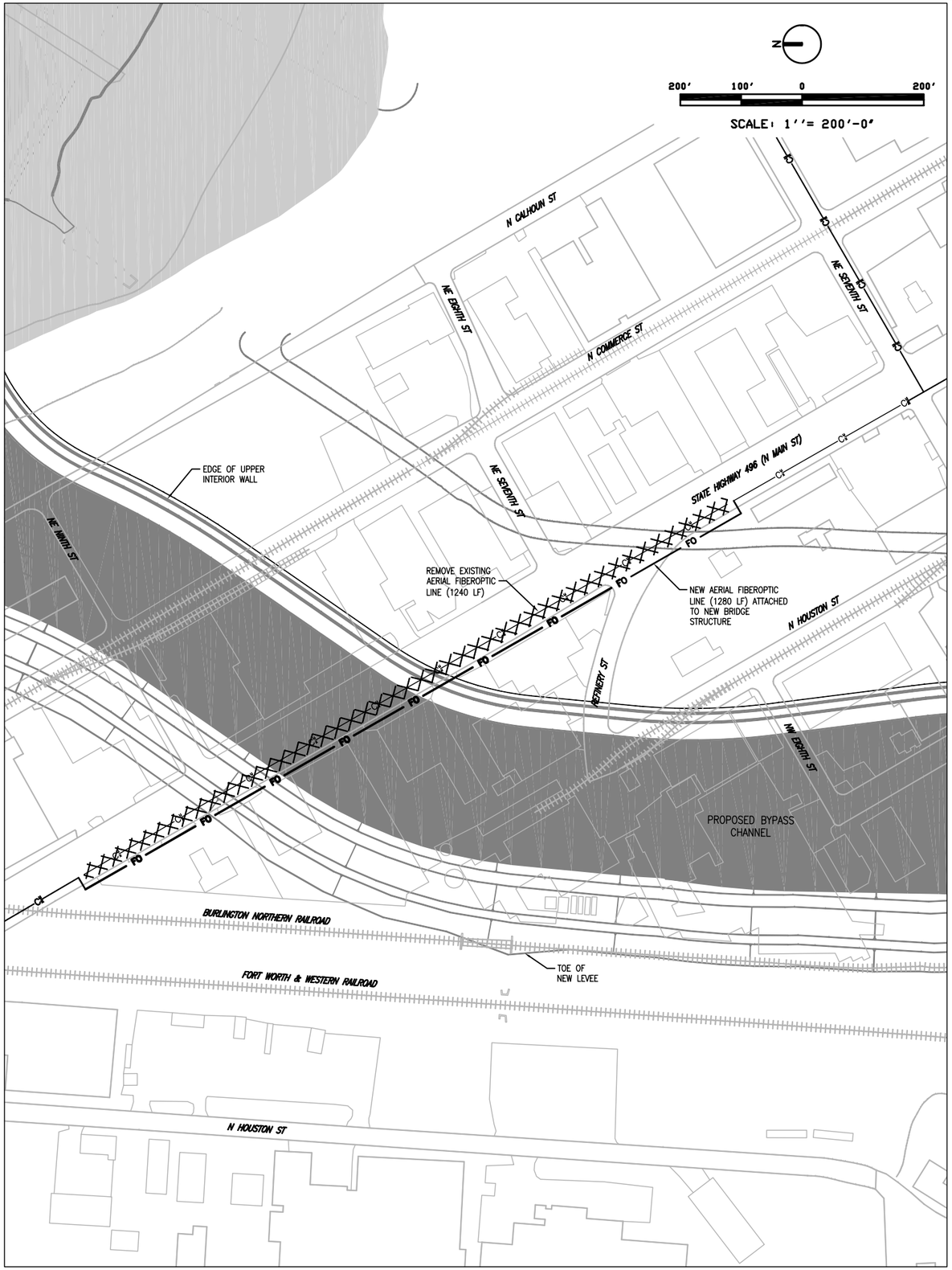


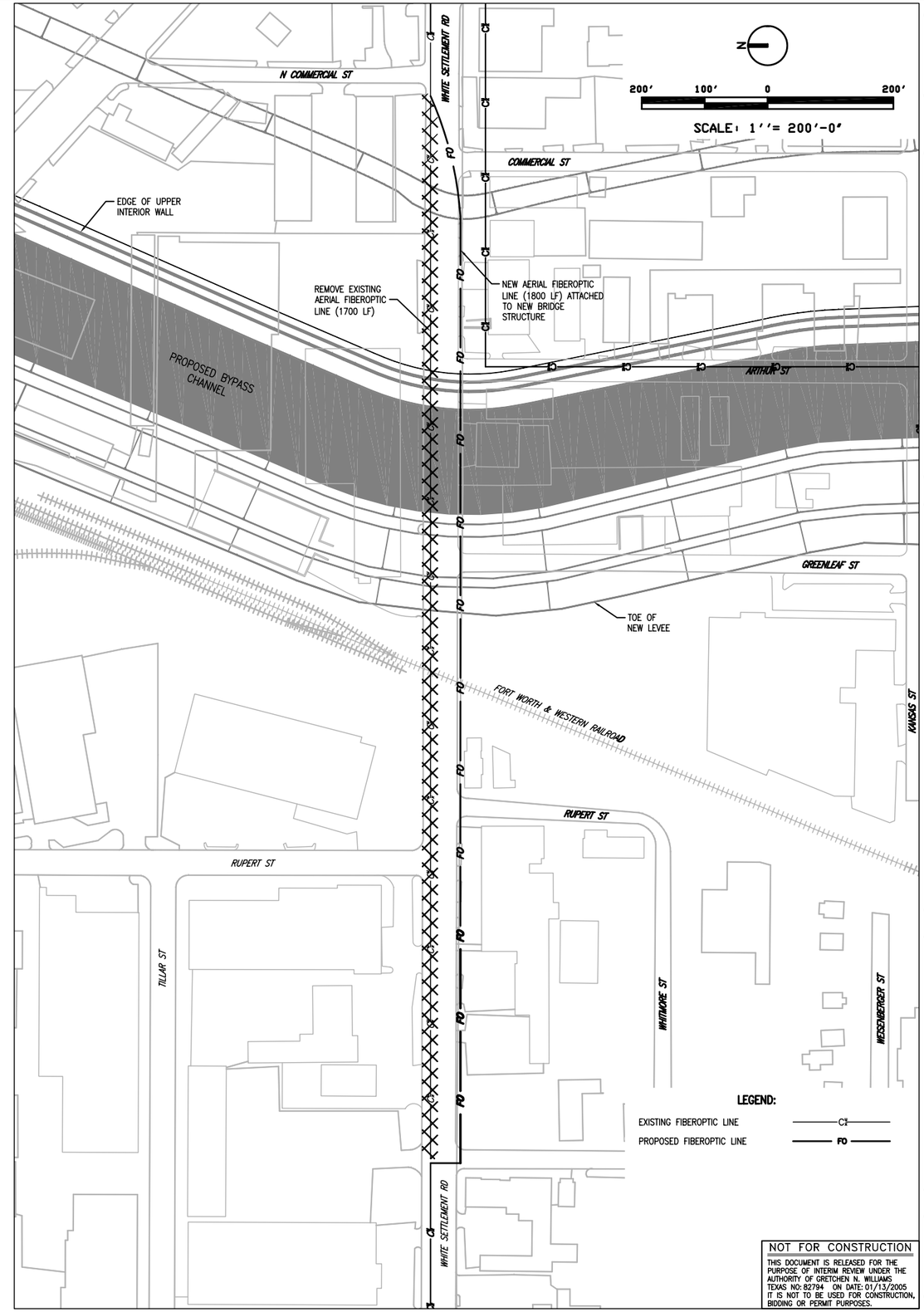


**LEGEND:**

EXISTING FIBEROPTIC LINE ——CT——

PROPOSED FIBEROPTIC LINE ——FO——

NOT FOR CONSTRUCTION

THIS DOCUMENT IS RELEASED FOR THE PURPOSE OF INTERIM REVIEW UNDER THE AUTHORITY OF GRETCHEN N. WILLIAMS TEXAS NO: 82794 ON DATE: 01/13/2005 IT IS NOT TO BE USED FOR CONSTRUCTION, BIDDING OR PERMIT PURPOSES.

US Army Corps of Engineers
Fort Worth District

| SYMBOL | DESCRIPTION | YYMMDD | ACTION | BY | DATE |
|---|---|---|---|---|---|

Date: JANUARY 2005
Sol No. XXXXXX
Contr No. XXXXXX
File name: XXXXX
Plot date: XXXXXX
Plot scale: XXXXXX

Designed by: G. CHIANG
Dwn by: B. LATHAM
Reviewed by: G. WILLIAMS
Submitted by: NAME TITLE

TARRANT REGIONAL WATER DISTRICT

CDM

FORT WORTH CENTRAL CITY PRELIMINARY DESIGN

# FIBEROPTICS PLAN I

SEQUENCE NO.
CU-FO-29

Sheet 77 of 139

DESIGN FILE: CU129077.dwg

Contr No.

REFERENCE FILE: S:\2521-TRINITY\XREF\2521G-BS.dwg
REFERENCE FILE: S:\2521-TRINITY\XREF_C\V-CPG002.dwg
REFERENCE FILE: S:\2521-TRINITY\XREF_C\VSP0002.dwg
REFERENCE FILE: S:\2521-TRINITY\XREF_C\VSP0003.DWG
REFERENCE FILE: S:\2521-TRINITY\XREF_C\VSP0031.DWG
REFERENCE FILE: S:\2521-TRINITY\XREF_C\water_blkX.DWG
REFERENCE FILE: S:\2521-TRINITY\XREF_C\V-CPX15.DWG

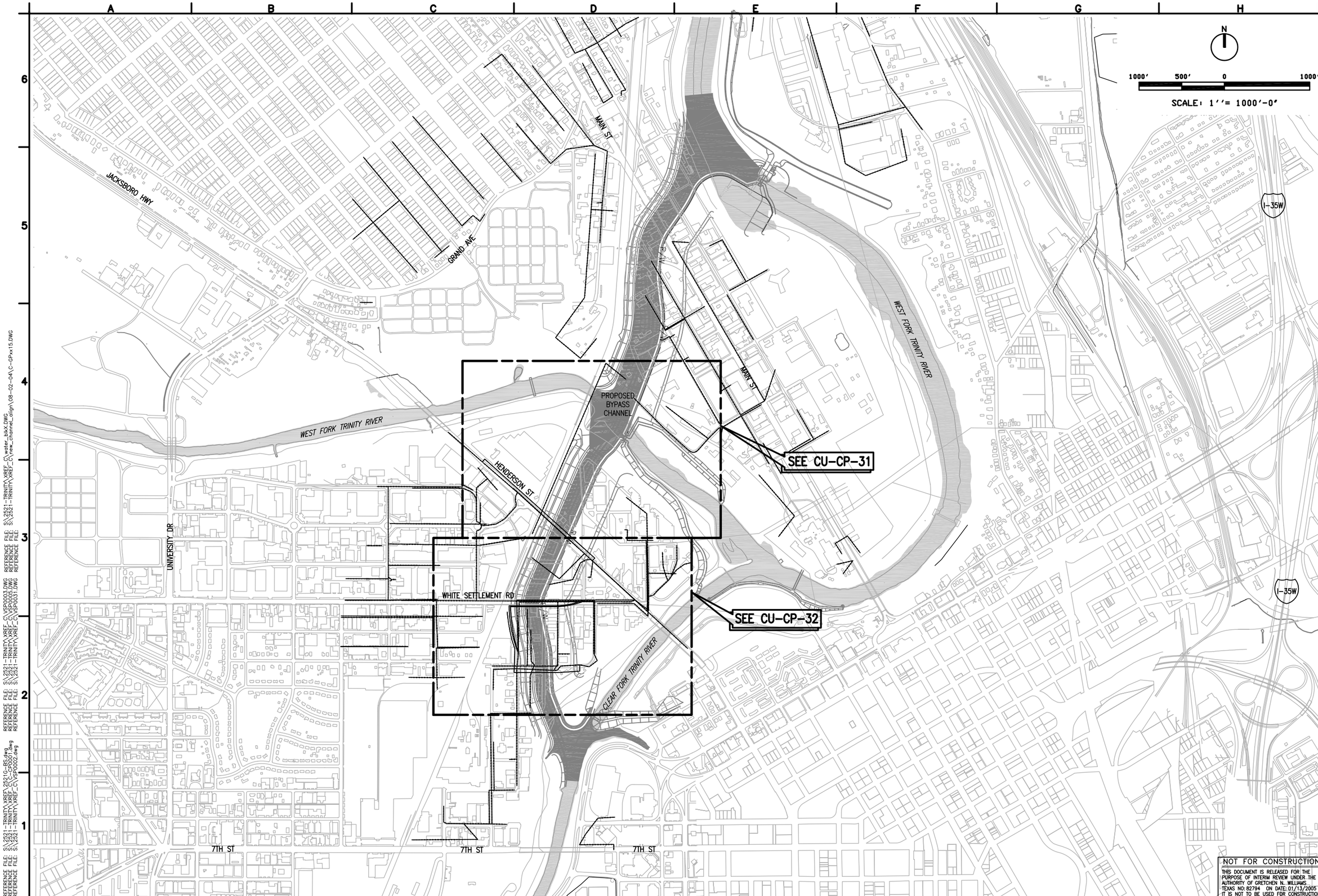


US Army Corps of Engineers
Fort Worth District

| Symbol | Description | By | Appr. | Date |
|---|---|---|---|---|

Date: JANUARY 2005
Designed by: G. CHIANG
Sol No. XXXXXX
Dwn by: B. LATHAM
Contr No. XXXXXX
Reviewed by: Name
File name: XXXXX
Plot date: XXXXX
Plot scale: XXXXXX
Submitted by: NAME TITLE

TARRANT REGIONAL WATER DISTRICT

CDM

FORT WORTH CENTRAL CITY PRELIMINARY DESIGN

# OVERALL CABLE PLAN

SEQUENCE NO.
CU-CP-30



NOT FOR CONSTRUCTION
THIS DOCUMENT IS RELEASED FOR THE PURPOSE OF INTERIM REVIEW UNDER THE AUTHORITY OF GRETCHEN N. WILLIAMS, TEXAS NO: 82794 ON DATE: 01/13/2005 IT IS NOT TO BE USED FOR CONSTRUCTION, BIDDING OR PERMIT PURPOSES.

DESIGN FILE: CU430078.dwg

Contr No.

REFERENCE FILE: S:\2521-TRINITY\XREF_C\water_blkX.DWG
REFERENCE FILE: S:\2521-TRINITY\XREF_C\new_channel_align\08-02-04\C-GPxx15.DWG
REFERENCE FILE: S:\2521-TRINITY\XREF_C\VSP0003.DWG
REFERENCE FILE: S:\2521-TRINITY\XREF_C\VSP0005.DWG
REFERENCE FILE: S:\2521-TRINITY\XREF_C\VSP0031.DWG
REFERENCE FILE: S:\2521-TRINITY\XREF_C\VSP0002.dwg
REFERENCE FILE: S:\2521-TRINITY\XREF\2521C-BS.dwg
REFERENCE FILE: S:\2521-TRINITY\XREF_C\C-CP0001.dwg

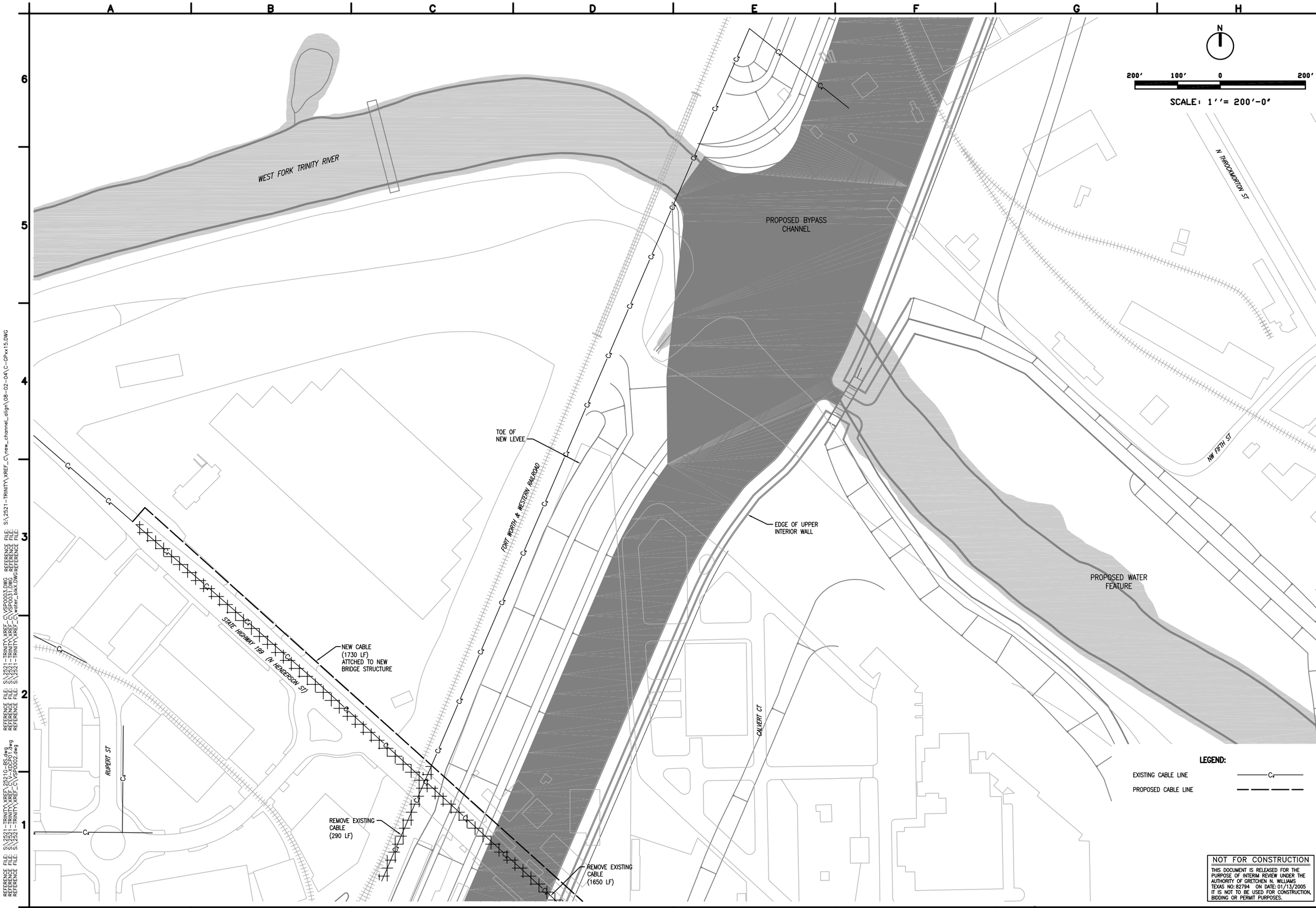


US Army Corps of Engineers
Fort Worth District

| Symbol | Description | Date | Action | Date |
|---|---|---|---|---|

Designed by: G. CHIANG
Dwn by: B. LATHAM
Reviewed by: G. WILLIAMS
Submitted by: NAME TITLE
Date: JANUARY 2005
Sol No. XXXXXX
Contr No. XXXXXX
File name: XXXXX
Plot date: XXXXX
Plot scale: XXXXXX

TARRANT REGIONAL WATER DISTRICT

CDM

FORT WORTH CENTRAL CITY PRELIMINARY DESIGN

CABLE PLAN I

SEQUENCE NO.
CU-CP-31

Sheet 79 of 139

NOT FOR CONSTRUCTION
THIS DOCUMENT IS RELEASED FOR THE PURPOSE OF INTERIM REVIEW UNDER THE AUTHORITY OF GRETCHEN N. WILLIAMS TEXAS NO: 82794 ON DATE: 01/13/2005 IT IS NOT TO BE USED FOR CONSTRUCTION, BIDDING OR PERMIT PURPOSES.

DESIGN FILE: CU131079.DWG

Contr No.

REFERENCE FILE: S:\2521-TRINITY\XREF\2521G-BS.dwg
REFERENCE FILE: S:\2521-TRINITY\XREF_C\V-XDCP01.dwg
REFERENCE FILE: S:\2521-TRINITY\XREF_C\VSP0002.dwg
REFERENCE FILE: S:\2521-TRINITY\XREF_C\VSP0003.DWG
REFERENCE FILE: S:\2521-TRINITY\XREF_C\VSP0031.DWG
REFERENCE FILE: S:\2521-TRINITY\XREF_C\water_blkX.DWG
REFERENCE FILE: S:\2521-TRINITY\XREF_C\VSP0002.dwg

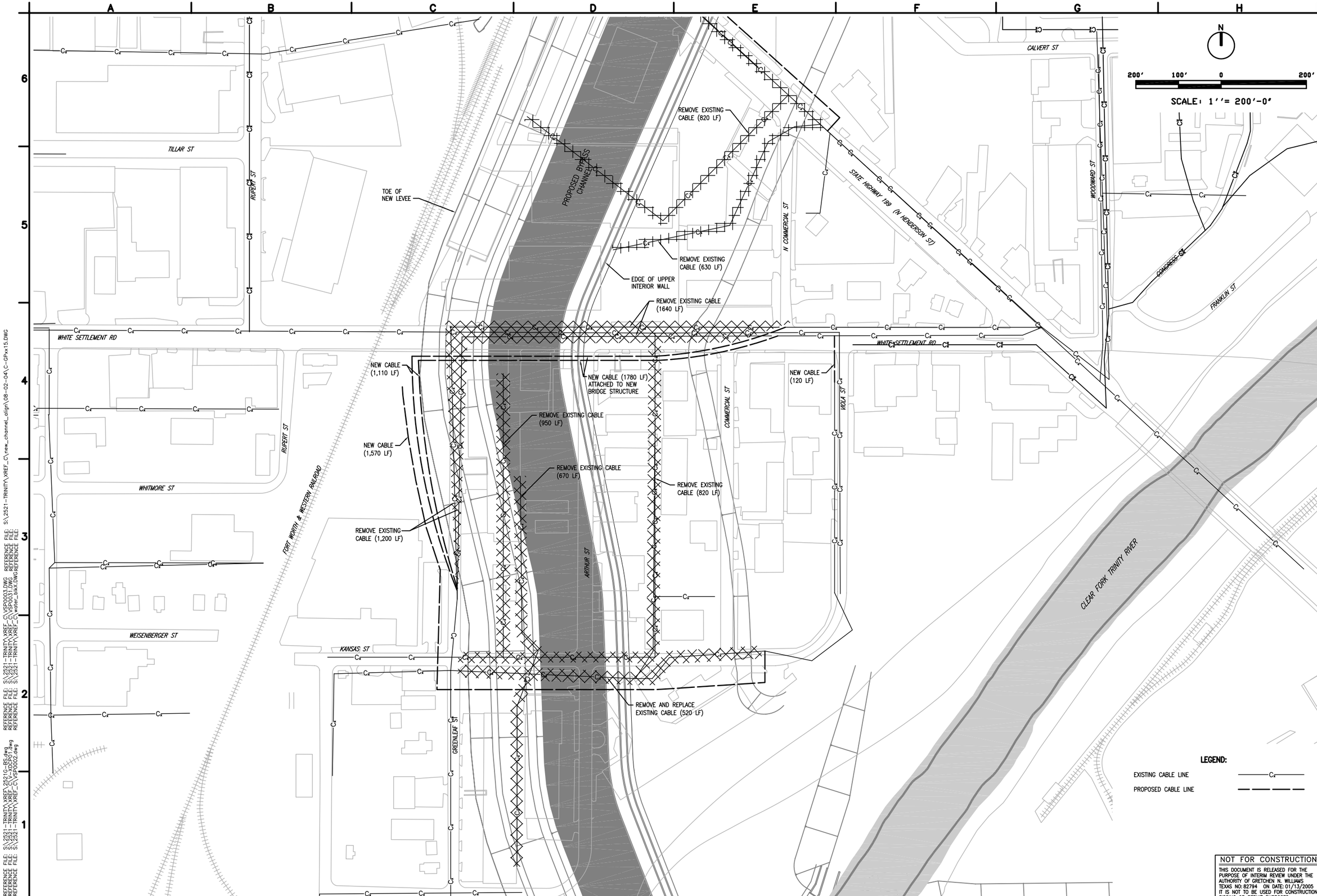


US Army Corps of Engineers
Fort Worth District

| Symbol | Description | Yr. | MO. | NO. | Action | Date |
|---|---|---|---|---|---|---|

Date: JANUARY 2005
Sol No. XXXXXX
Contr No. XXXXXX
File name: XXXXX
Plot date: XXXXX
Plot scale: XXXXXX

Designed by: G. CHIANG
Dwn by: B. LATHAM
Reviewed by: G. WILLIAMS
Submitted by: NAME TITLE

TARRANT REGIONAL WATER DISTRICT

CDM

FORT WORTH CENTRAL CITY PRELIMINARY DESIGN

# CABLE PLAN II

SEQUENCE NO.
CU-CP-32
Sheet 80 of 139

NOT FOR CONSTRUCTION
THIS DOCUMENT IS RELEASED FOR THE PURPOSE OF INTERIM REVIEW UNDER THE AUTHORITY OF GRETCHEN N. WILLIAMS TEXAS NO: 82794 ON DATE: 01/13/2005 IT IS NOT TO BE USED FOR CONSTRUCTION, BIDDING OR PERMIT PURPOSES.

DESIGN FILE: CU132080.dwg

REFERENCE FILE: S:\2521-TRINITY\XREF_C\new_channel_align\08-02-04\C-CPxx15.DWG
REFERENCE FILE: S:\2521-TRINITY\XREF_C\VSP0003.DWG
REFERENCE FILE: S:\2521-TRINITY\XREF_C\VSP0031.DWG
REFERENCE FILE: S:\2521-TRINITY\XREF_C\water_blkX.DWG
REFERENCE FILE: S:\2521-TRINITY\XREF\2521G-BS.dwg
REFERENCE FILE: S:\2521-TRINITY\XREF_C\V-XDCP01.dwg
REFERENCE FILE: S:\2521-TRINITY\XREF_C\VSP0002.dwg

Contr No.

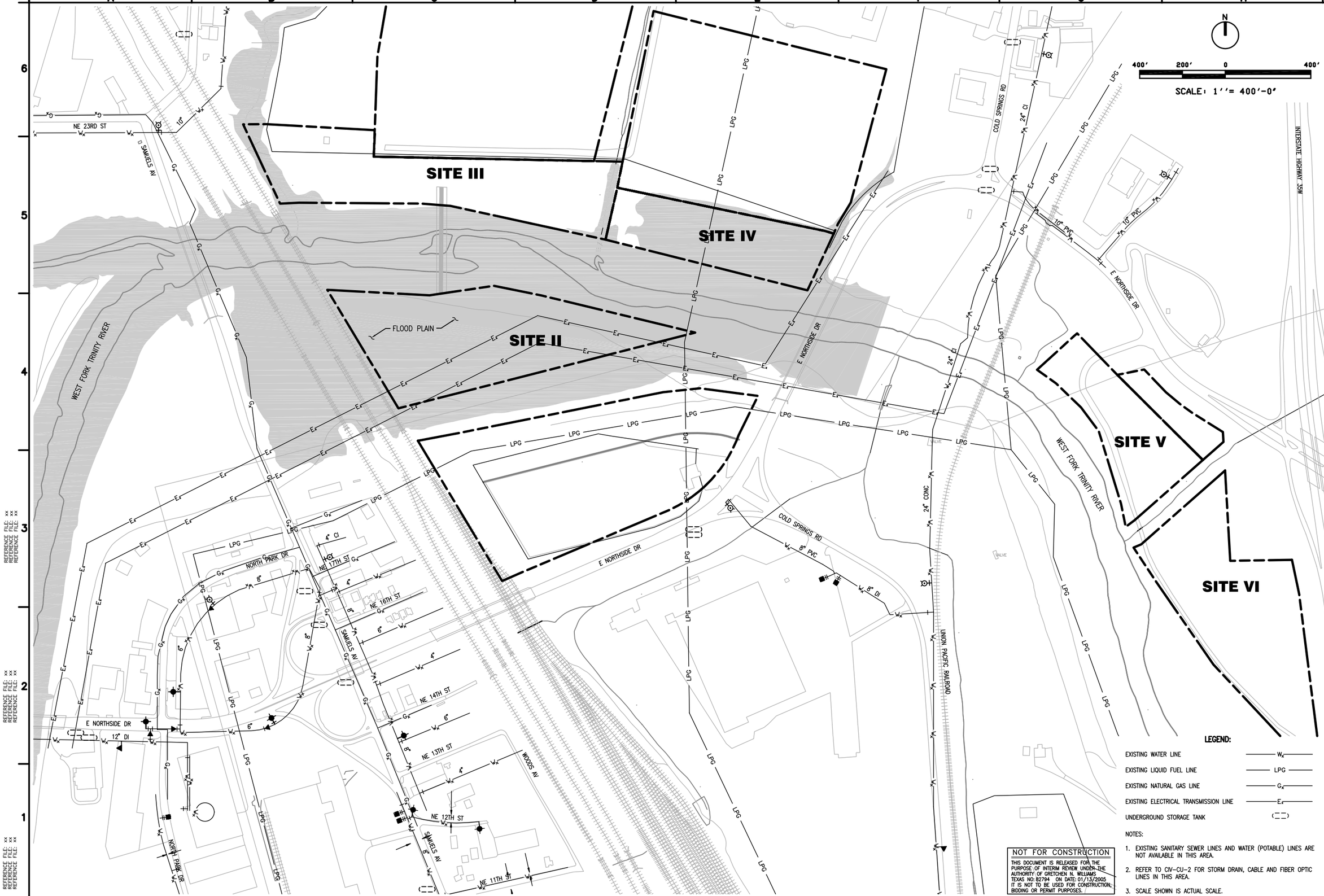


LEGEND:

| | |
|---|---|
| EXISTING WATER LINE | $W_x$ |
| EXISTING LIQUID FUEL LINE | LPG |
| EXISTING NATURAL GAS LINE | $G_x$ |
| EXISTING ELECTRICAL TRANSMISSION LINE | $E_x$ |
| UNDERGROUND STORAGE TANK | |

NOTES:

1. EXISTING SANITARY SEWER LINES AND WATER (POTABLE) LINES ARE NOT AVAILABLE IN THIS AREA.
2. REFER TO CIV-CU-2 FOR STORM DRAIN, CABLE AND FIBER OPTIC LINES IN THIS AREA.
3. SCALE SHOWN IS ACTUAL SCALE.

NOT FOR CONSTRUCTION

THIS DOCUMENT IS RELEASED FOR THE PURPOSE OF INTERIM REVIEW UNDER THE AUTHORITY OF GRETCHEN N. WILLIAMS TEXAS NO: 82794 ON DATE: 01/13/2005 IT IS NOT TO BE USED FOR CONSTRUCTION, BIDDING OR PERMIT PURPOSES.

US Army Corps of Engineers
Fort Worth District

| Symbol | Description | xx | Action | xx | Date |
|---|---|---|---|---|---|

TARRANT REGIONAL WATER DISTRICT

CDM

Designed by: G. CHIANG
Dwn by: B. LATHAM
Reviewed by: Name
Submitted by: NAME TITLE
Date: JANUARY 2005
Sol No. XXXXXX
Contr No. XXXXXX
File name: XXXXX
Plot date: XXXXX
Plot scale: XXXXXX

FORT WORTH CENTRAL CITY PRELIMINARY DESIGN

N. SAMUELS AVE. CORRIDOR EXISTING UTILITIES PLAN I

SEQUENCE NO.
CU-33

Sheet 81 of 139

DESIGN FILE: CU133081.dwg

Contr No.

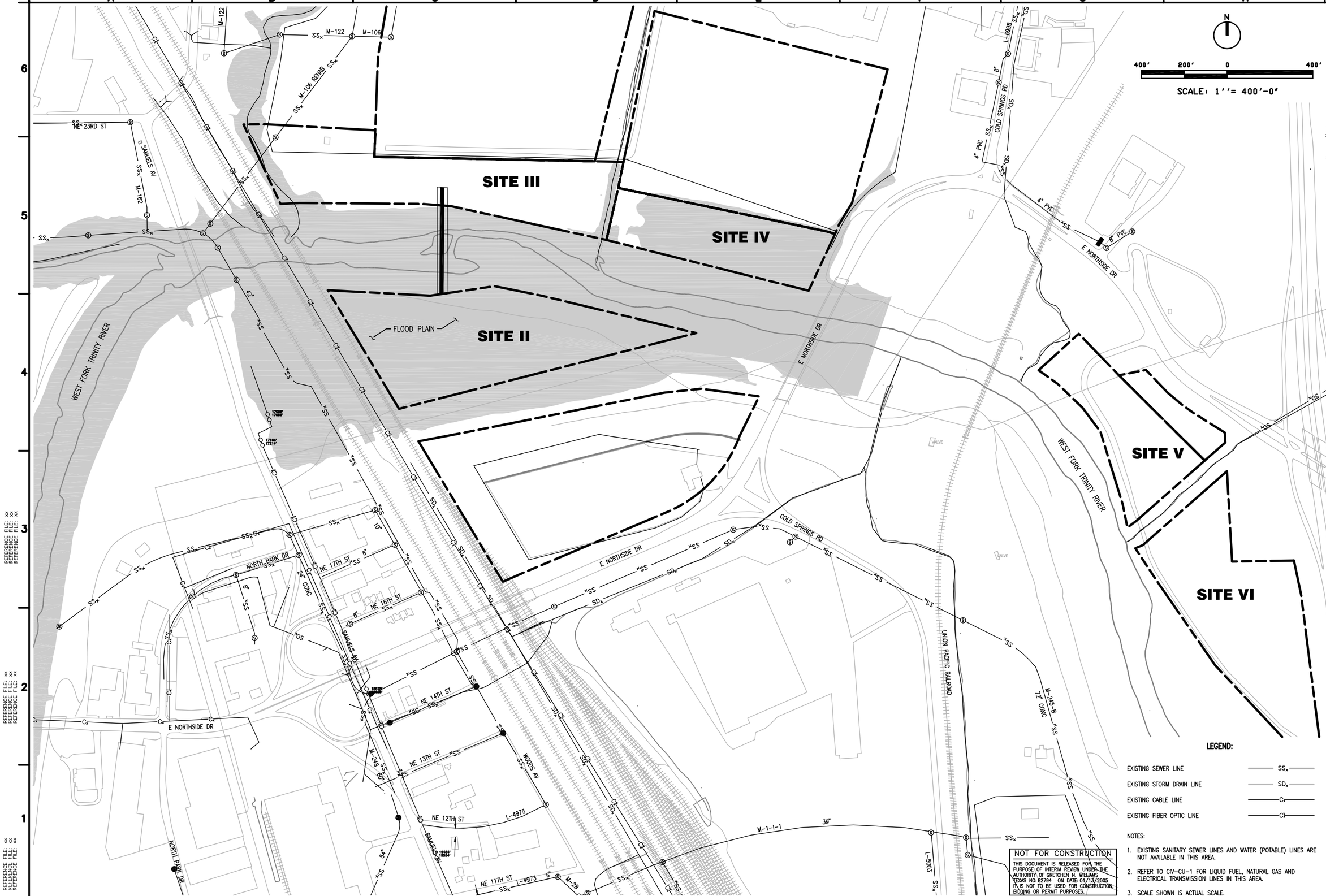


LEGEND:

| | |
|---|---|
| EXISTING SEWER LINE | $SS_x$ |
| EXISTING STORM DRAIN LINE | $SD_x$ |
| EXISTING CABLE LINE | $C_x$ |
| EXISTING FIBER OPTIC LINE | $C_x^v$ |

NOTES:

1. EXISTING SANITARY SEWER LINES AND WATER (POTABLE) LINES ARE NOT AVAILABLE IN THIS AREA.
2. REFER TO CIV-CU-1 FOR LIQUID FUEL, NATURAL GAS AND ELECTRICAL TRANSMISSION LINES IN THIS AREA.
3. SCALE SHOWN IS ACTUAL SCALE.

NOT FOR CONSTRUCTION

THIS DOCUMENT IS RELEASED FOR THE PURPOSE OF INTERIM REVIEW UNDER THE AUTHORITY OF GRETCHEN N. WILLIAMS TEXAS NO: 82794 ON DATE: 01/13/2005 IT IS NOT TO BE USED FOR CONSTRUCTION, BIDDING OR PERMIT PURPOSES.

US Army Corps of Engineers
Fort Worth District

| Symbol | Description | Date | Action | Date |
|---|---|---|---|---|
| | | | | |

TARRANT REGIONAL WATER DISTRICT

CDM

Designed by: G. CHIANG
Dwn by: B. LATHAM
Reviewed by: Name
Submitted by: NAME TITLE
Date: JANUARY 2005
Sol No. XXXXXX
Contr No. XXXXXX
File name: XXXXX
Plot date: XXXXX
Plot scale: XXXXXX

FORT WORTH CENTRAL CITY PRELIMINARY DESIGN

N. SAMUELS AVE. CORRIDOR EXISTING UTILITIES PLAN II

SEQUENCE NO.
CU-34



DESIGN FILE: CU134082.dwg

Contr No.

REFERENCE FILE: xx
REFERENCE FILE: xx
REFERENCE FILE: xx

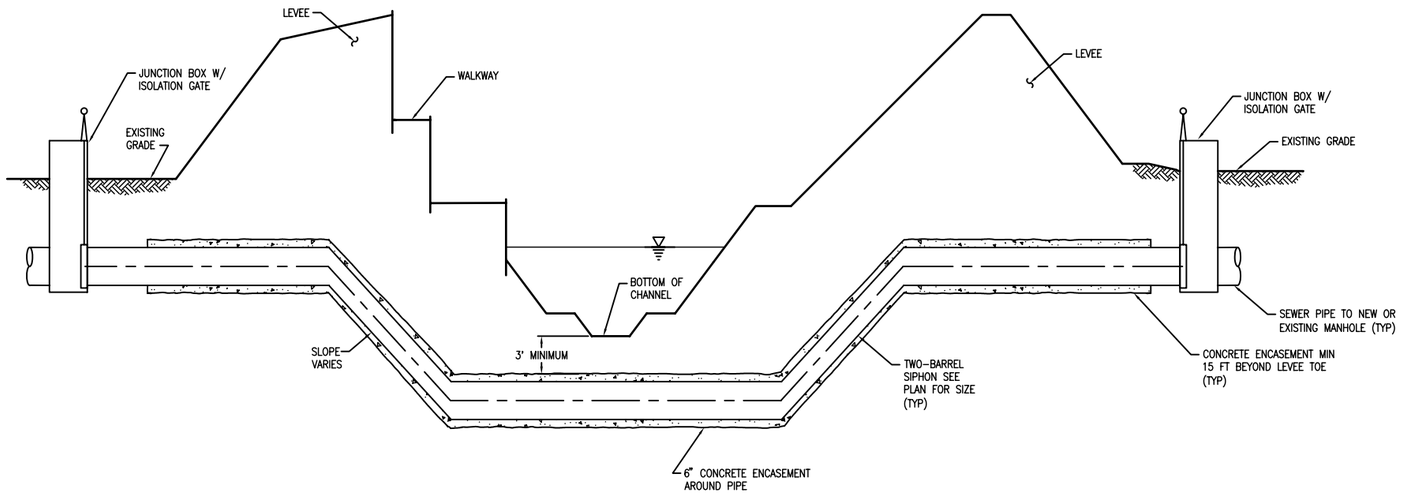


**TYPICAL SEWER SIPHON BYPASS CHANNEL CROSSING**

## SECTION A

NTS

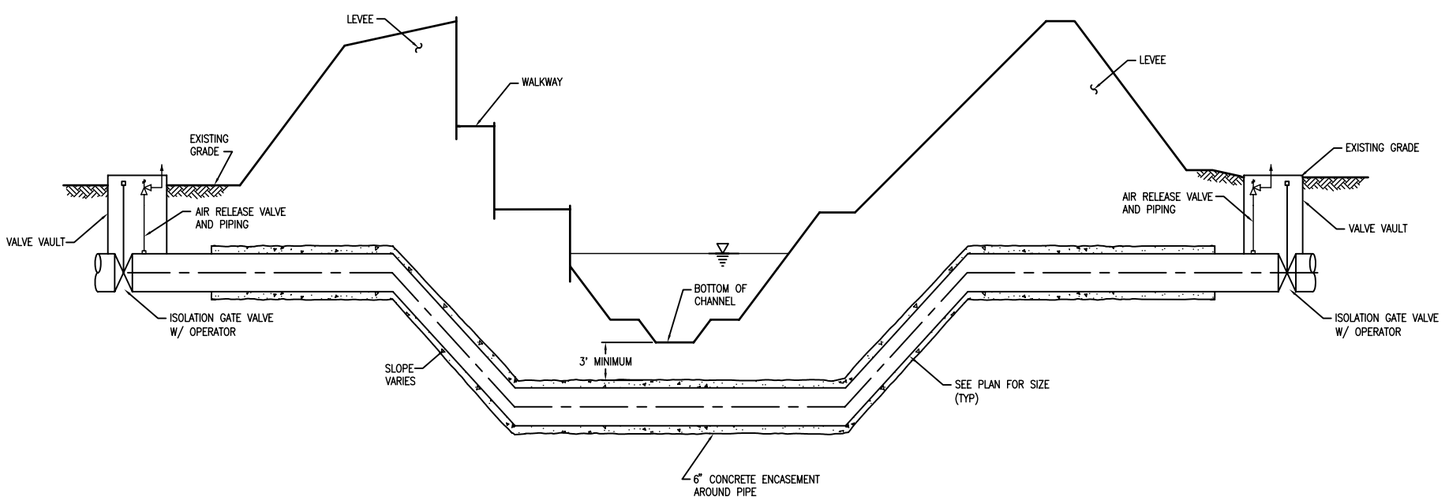


**TYPICAL WATER PIPE BYPASS CHANNEL CROSSING**

## SECTION B

NTS

REFERENCE FILE: S:\2521-TRINITY\XREF\2521G-BS.dwg
REFERENCE FILE: S:\2521-TRINITY\XREF_C\C-SCSS01.dwg
REFERENCE FILE:
REFERENCE FILE:
REFERENCE FILE:
REFERENCE FILE:

US Army Corps of Engineers
Fort Worth District

| Symbol | Description | Date | Approved |
|---|---|---|---|

DESIGN FILE: CU335083.dwg

TARRANT REGIONAL WATER DISTRICT

CDM

| | |
|---|---|
| Designed by: G. CHIANG | Date: JANUARY 2005 |
| Dwn by: B. LATHAM | Sol No. XXXXXX |
| Reviewed by: G. WILLIAMS | Contr No. XXXXXX |
| Submitted by: NAME TITLE | File name: XXXXX Plot date: XXXXX Plot scale: XXXXXX |

FORT WORTH CENTRAL CITY PRELIMINARY DESIGN

**TYPICAL SECTIONS**

NOT FOR CONSTRUCTION

THIS DOCUMENT IS RELEASED FOR THE PURPOSE OF INTERIM REVIEW UNDER THE AUTHORITY OF GRETCHEN N. WILLIAMS TEXAS NO: 82794 ON DATE: 01/13/2005 IT IS NOT TO BE USED FOR CONSTRUCTION, BIDDING OR PERMIT PURPOSES.

SEQUENCE NO.

CU-SC-35



Contr No.

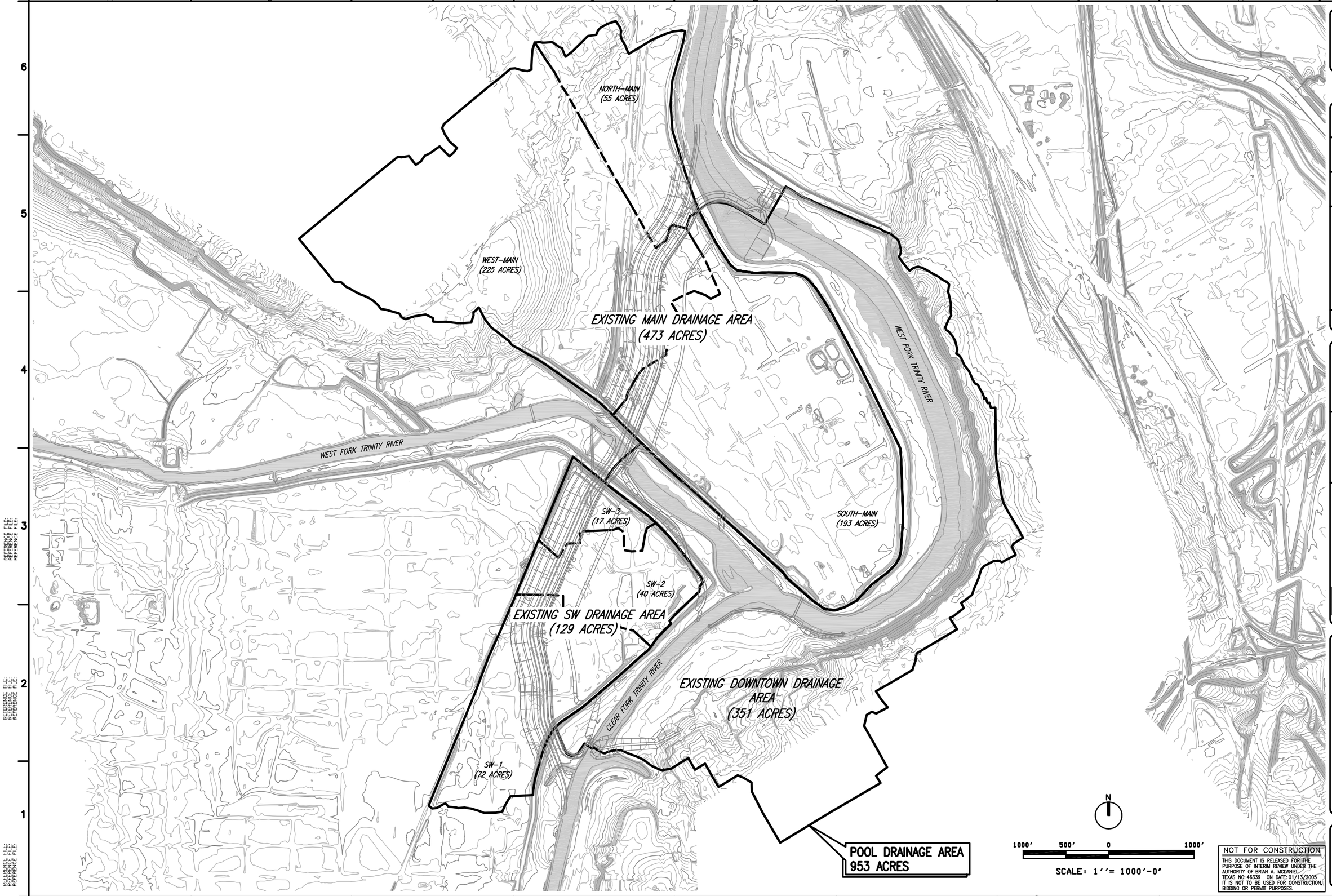


US Army Corps of Engineers
Fort Worth District

| Symbol | Description | Ex. U.O. No. | Ex. Action | Ex. Date |
|---|---|---|---|---|

Designed by: B. McDANIEL
Dwn by: B. LATHAM
Reviewed by: Name
Submitted by: NAME TITLE
Date: JANUARY 2005
Sol No. XXXXXX
Contr No. XXXXXX
File name: XXXXX
Plot date: XXXXX
Plot scale: XXXXXX

TARRANT REGIONAL WATER DISTRICT

CDM

FORT WORTH CENTRAL CITY PRELIMINARY DESIGN

# OVERALL EXISTING SUMP DRAINAGE AREAS

SEQUENCE NO.
CU-SD-36



NOT FOR CONSTRUCTION
THIS DOCUMENT IS RELEASED FOR THE PURPOSE OF INTERIM REVIEW UNDER THE AUTHORITY OF BRIAN A. MCDANIEL TEXAS NO: 46339 ON DATE: 01/13/2005 IT IS NOT TO BE USED FOR CONSTRUCTION, BIDDING OR PERMIT PURPOSES.

DESIGN FILE: CU436084.dwg

Contr No.

REFERENCE FILE:
REFERENCE FILE:
REFERENCE FILE:

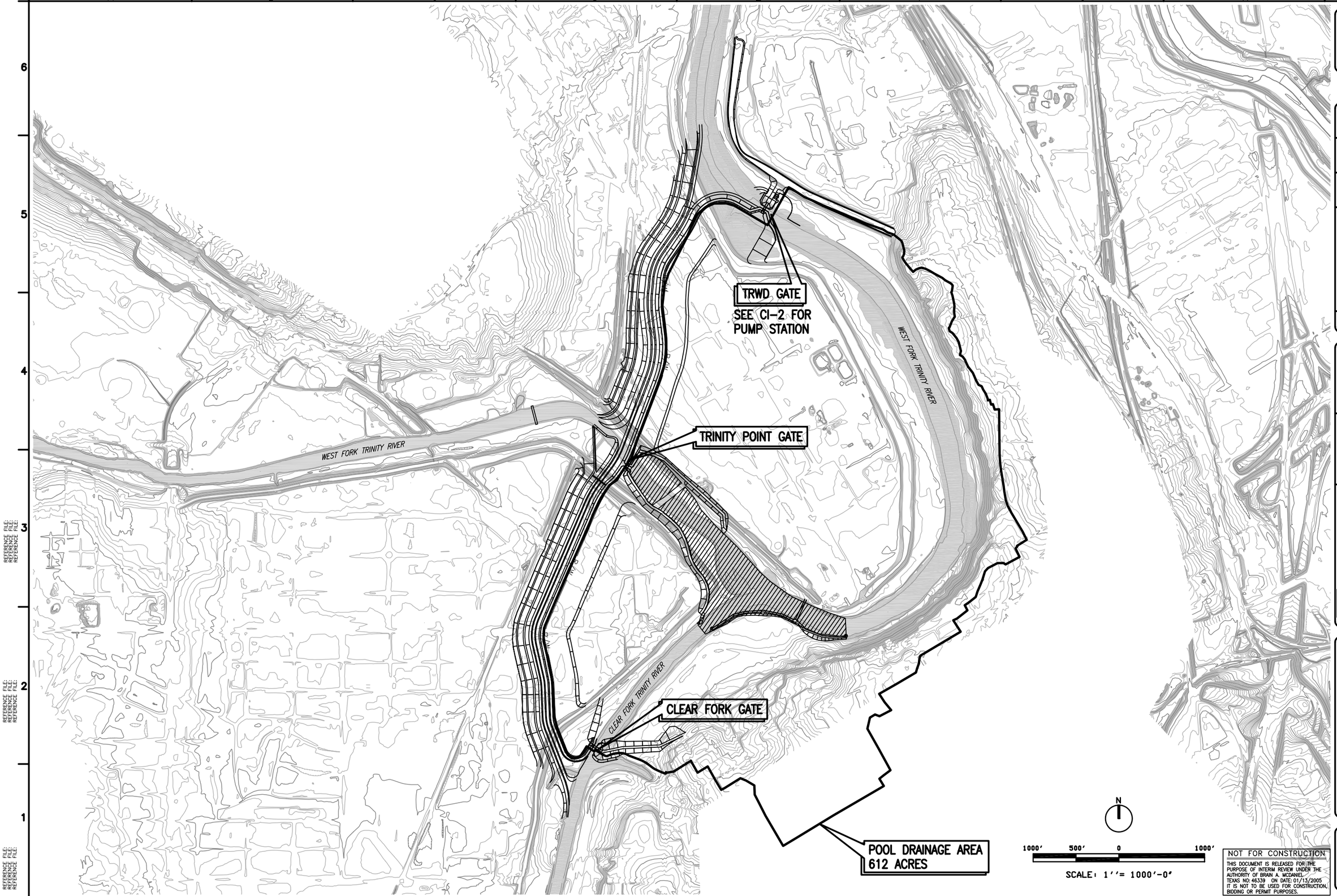


US Army Corps of Engineers
Fort Worth District

| Symbol | Description | Dwn | Ckd | Action | Date |
|---|---|---|---|---|---|

Designed by: B. McDANIEL
Dwn by: B. LATHAM
Reviewed by: Name
Submitted by: NAME TITLE
Date: JANUARY 2005
Sol No. XXXXXX
Contr No. XXXXXX
File name: XXXXX
Plot date: XXXXX
Plot scale: XXXXXX

TARRANT REGIONAL WATER DISTRICT

CDM

FORT WORTH CENTRAL CITY PRELIMINARY DESIGN

# OVERALL PROPOSED SUMP DRAINAGE AREA

SEQUENCE NO.
CU-SD-37



NOT FOR CONSTRUCTION
THIS DOCUMENT IS RELEASED FOR THE PURPOSE OF INTERIM REVIEW UNDER THE AUTHORITY OF BRAIN A. MCDANIEL TEXAS NO: 46339 ON DATE: 01/13/2005 IT IS NOT TO BE USED FOR CONSTRUCTION, BIDDING OR PERMIT PURPOSES.

DESIGN FILE: CU437085.dwg

Contr No.

REFERENCE FILE:
REFERENCE FILE:
REFERENCE FILE:

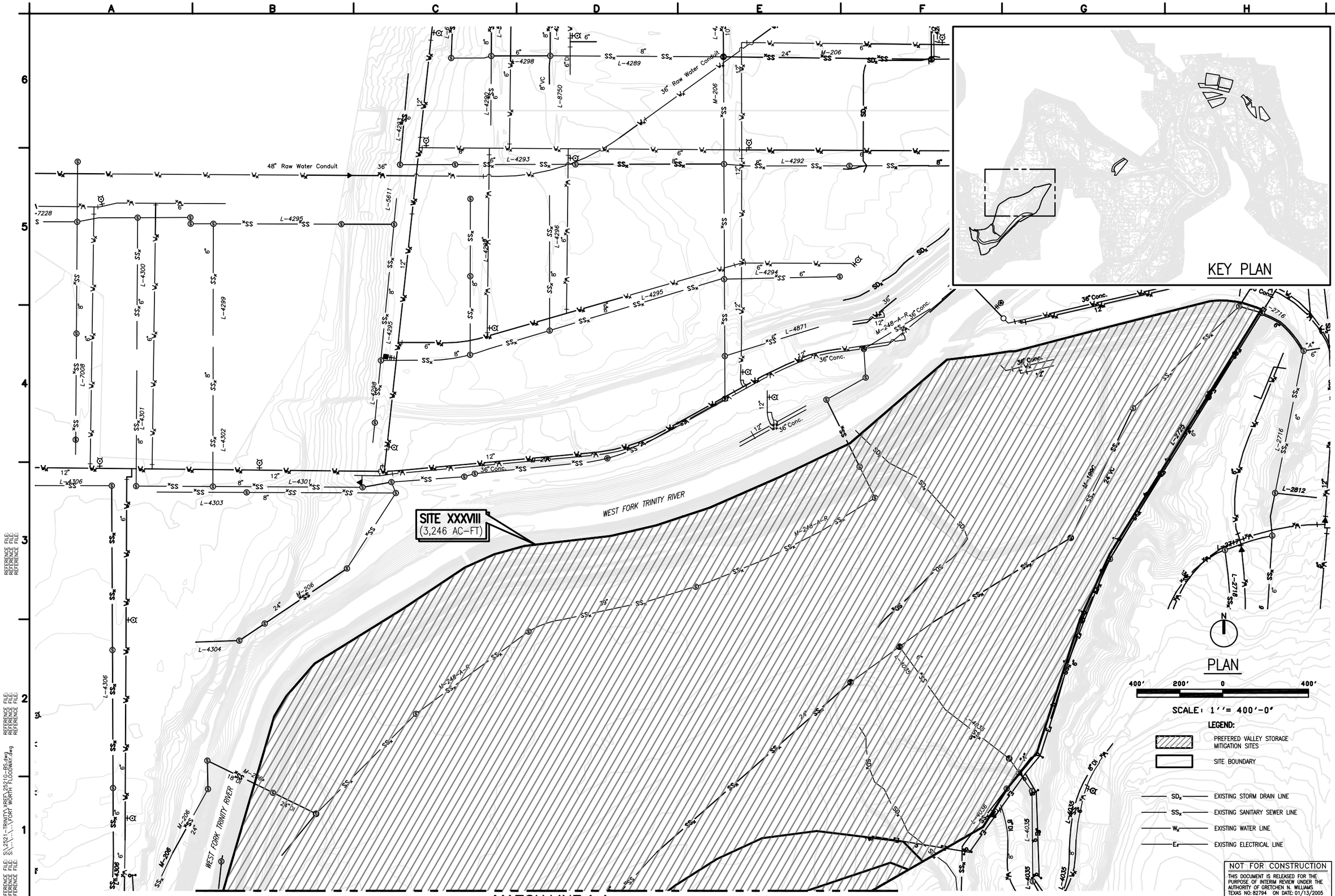


NOT FOR CONSTRUCTION

THIS DOCUMENT IS RELEASED FOR THE PURPOSE OF INTERIM REVIEW UNDER THE AUTHORITY OF GRETCHEN N. WILLIAMS TEXAS NO: 82794 ON DATE: 01/13/2005 IT IS NOT TO BE USED FOR CONSTRUCTION, BIDDING OR PERMIT PURPOSES.

US Army Corps of Engineers
Fort Worth District

| Symbol | Description | U.O. NO. | Action | Date |
|---|---|---|---|---|

Designed by: –
Dwn by: B. LATHAM
Reviewed by:
Submitted by:
Date: JANUARY 2005
Sol No.
Contr No.
File name:
Plot date:
Plot scale:

TARRANT REGIONAL WATER DISTRICT

CDM

FORT WORTH CENTRAL CITY PRELIMINARY DESIGN

VALLEY STORAGE UTILITIES
SITE XXXVIII - SHEET 1 OF 2

SEQUENCE NO.
CU-VS-38

Sheet 86 of 139

DESIGN FILE: CU138086.DWG

Contr No.

REFERENCE FILE: S:\2521-TRINITY\XREF\2521G-BS.dwg
REFERENCE FILE: S:\...\...\FORT WORTH FLOODWAY.dwg

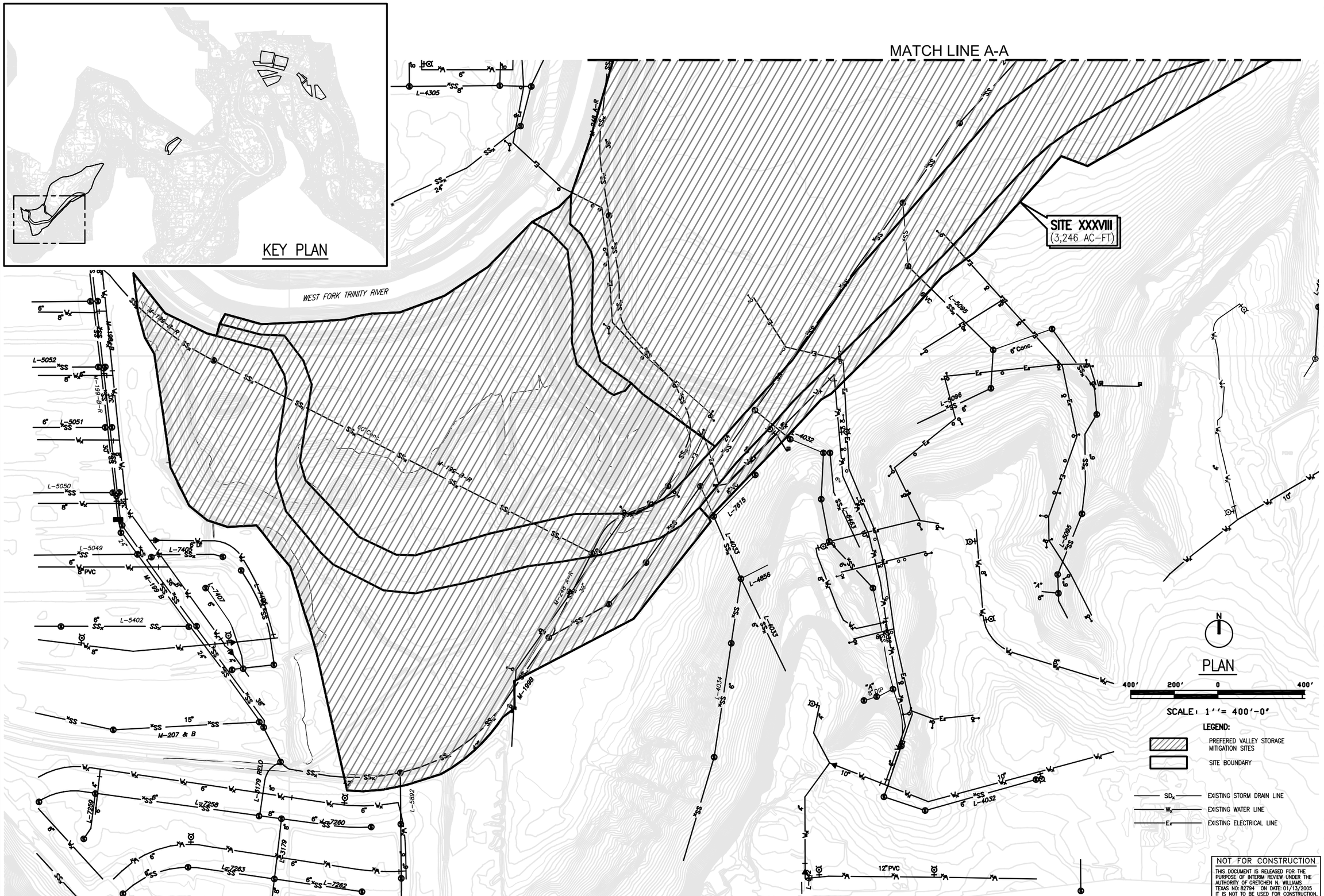


US Army Corps of Engineers
Fort Worth District

| Symbol | Description | Mod. No. | Action | Date |
|---|---|---|---|---|

Designed by: –
Date: JANUARY 2005
Dwn by: B. LATHAM
Sol. No.
Reviewed by:
Contr. No.
Submitted by:
File name:
Plot date:
Plot scale:

TARRANT REGIONAL WATER DISTRICT

CDM

FORT WORTH CENTRAL CITY PRELIMINARY DESIGN

VALLEY STORAGE UTILITIES
SITE XXXVIII - SHEET 2 OF 2

SEQUENCE NO.
CU-VS-39

Sheet 87 of 139

NOT FOR CONSTRUCTION

THIS DOCUMENT IS RELEASED FOR THE PURPOSE OF INTERIM REVIEW UNDER THE AUTHORITY OF GRETCHEN N. WILLIAMS TEXAS NO:82794 ON DATE:01/13/2005 IT IS NOT TO BE USED FOR CONSTRUCTION, BIDDING OR PERMIT PURPOSES.

DESIGN FILE: CU130087.DWG

Contr. No.

REFERENCE FILE: S:\2521-TRINITY\REF\2521G-BS.dwg
REFERENCE FILE: S:\...\...\FORT WORTH FLOODWAY.dwg

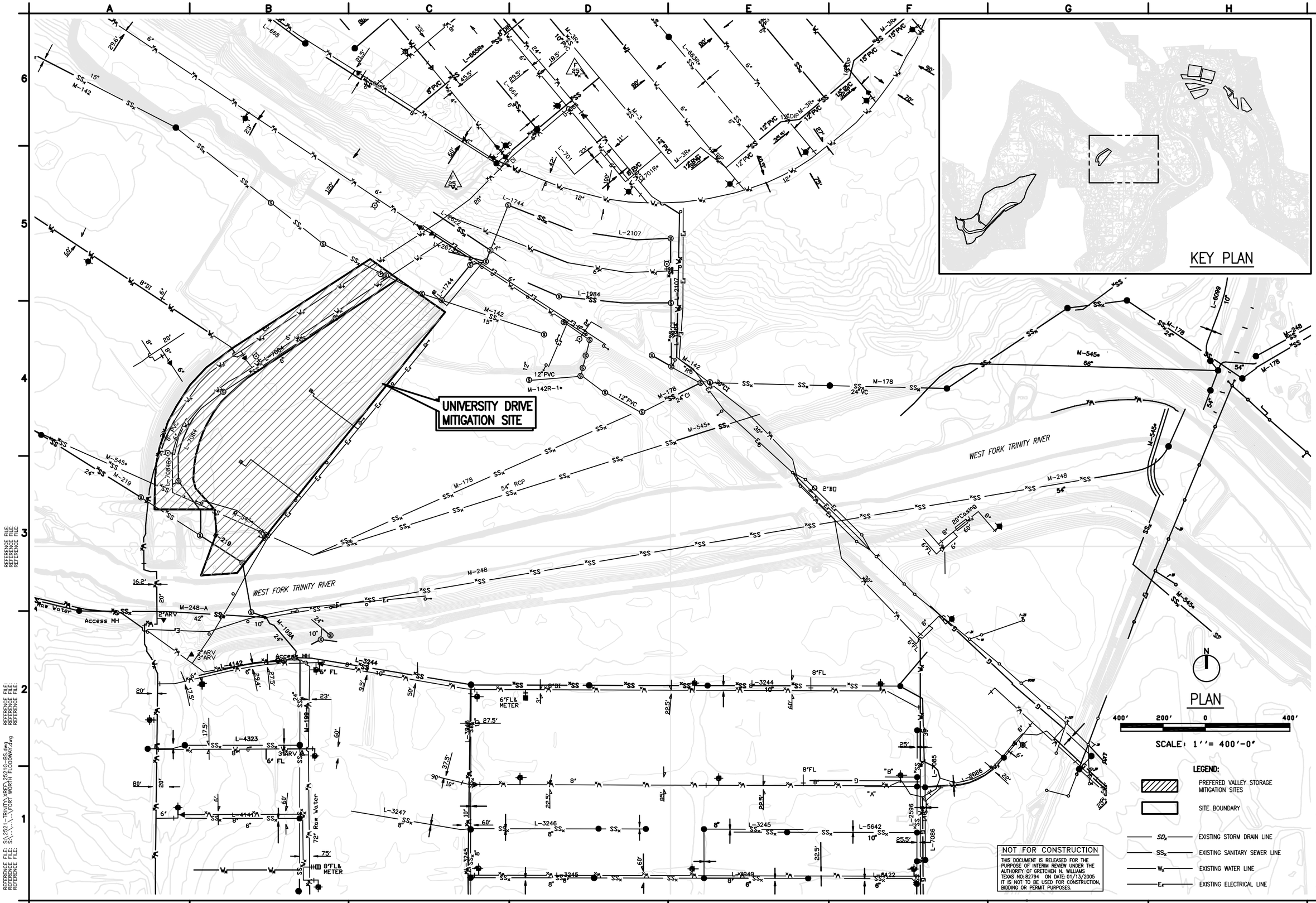


US Army Corps of Engineers
Fort Worth District

| Symbol | Description | Mod. No. | Action | Date |
|---|---|---|---|---|

Date: JANUARY 2005
Designed by: –
Sol. No.
Dwn. by: B. LATHAM
Contr. No.
Reviewed by:
Submitted by:
File name:
Plot date:
Plot scale:

TARRANT REGIONAL WATER DISTRICT

CDM

FORT WORTH CENTRAL CITY PRELIMINARY DESIGN

VALLEY STORAGE UTILITIES
UNIVERSITY DRIVE

SEQUENCE NO.
CU-VS-40

Sheet 88 of 139

DESIGN FILE: CU140088.DWG

Contr. No.

REFERENCE FILE: S:\2521-TRINITY\XREF\2521G-BS.dwg
REFERENCE FILE: S:\...\...\FORT WORTH FLOODWAY.dwg
REFERENCE FILE:

US Army Corps of Engineers
Fort Worth District

| Symbol | Description | U.O.D. NO. | Action | Date |
|---|---|---|---|---|
| | | | | |

Date: JANUARY 2005
Sol No.
Contr No.
Designed by: –
Dwn by: B. LATHAM
Reviewed by:
Submitted by:
File name:
Plot date:
Plot scale:

TARRANT REGIONAL WATER DISTRICT

CDM

FORT WORTH CENTRAL CITY PRELIMINARY DESIGN

VALLEY STORAGE UTILITIES
SITES II, III, & IV

SEQUENCE NO.
CU-VS-41

Sheet 89 of 139

DESIGN FILE: CU141089.DWG

Contr No.

REFERENCE FILE: S:\2521-TRINITY\VREF\2521G-BS.dwg
REFERENCE FILE: S:\...\...\FORT WORTH FLOODWAY.dwg

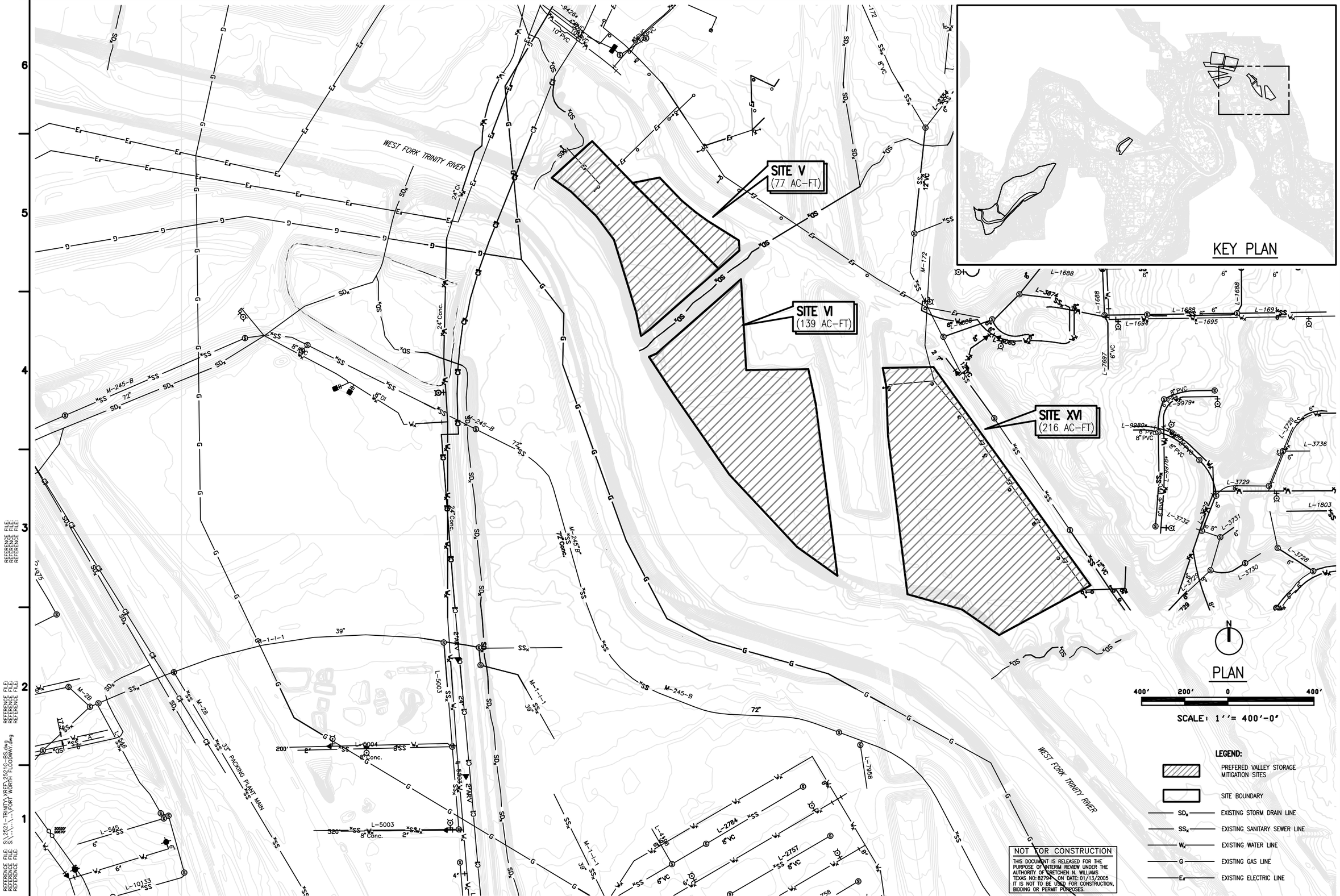


US Army Corps of Engineers
Fort Worth District

| Symbol | Description | Mod. No. | Action | Date |
|---|---|---|---|---|
| | | | | |

Designed by: –
Date: JANUARY 2005
Dwn by: B. LATHAM
Scl No.
Reviewed by:
Contr No.
Submitted by:
File name:
Plot date:
Plot scale:

TARRANT REGIONAL WATER DISTRICT

CDM

FORT WORTH CENTRAL CITY PRELIMINARY DESIGN

VALLEY STORAGE UTILITIES
SITES V, VI & XVI

SEQUENCE NO.
CU-VS-42

Sheet 90 of 139

DESIGN FILE: CU142090.DWG

Contr No.

REFERENCE FILE: S:\2521-TRINITY\XREF\2521G-BS.dwg
REFERENCE FILE: S:\...\...\FORT WORTH FLOODWAY.dwg

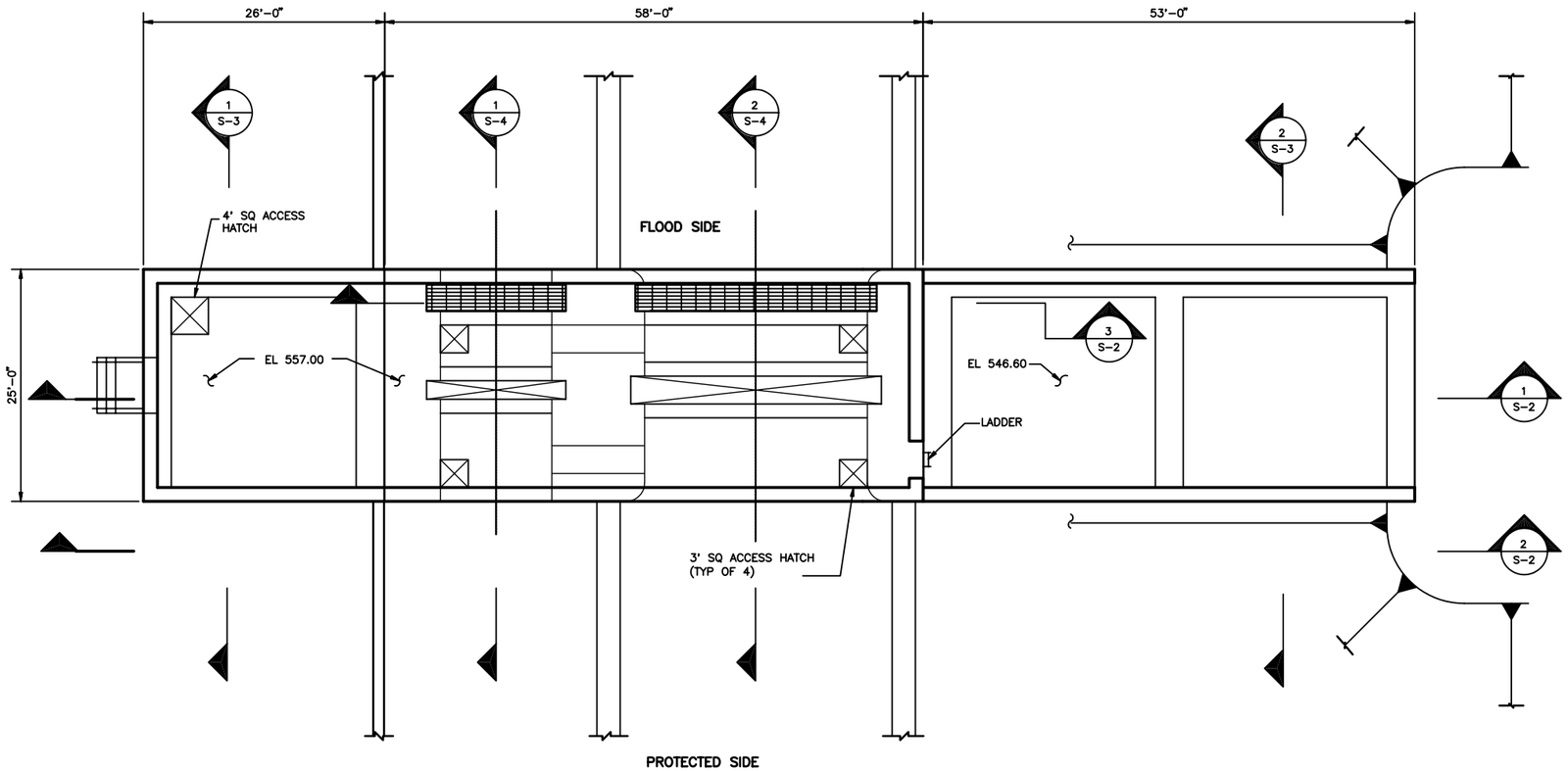


TRWD ISOLATION GATE FACILITY

## PLAN

1/8" = 1'-0"

8' 4' 0 8'

SCALE: 1/8 ''= 1'-0"

HALF SIZE PRINT

NOT FOR CONSTRUCTION

THIS DOCUMENT IS RELEASED FOR THE PURPOSE OF INTERIM REVIEW UNDER THE AUTHORITY OF WILLIAM C. SHERMAN TEXAS NO: 68207 ON DATE: 01/05/05 IT IS NOT TO BE USED FOR CONSTRUCTION, BIDDING OR PERMIT PURPOSES.

US Army Corps of Engineers
Fort Worth District

| Symbol | Description | D.O. NO. | Action | Date |
|---|---|---|---|---|
| | | | | |

TARRANT REGIONAL WATER DISTRICT

Designed by: B. ARCHULETTA
Dwn by: C. REDDIN
Reviewed by: W. SHERMAN
Submitted by: W. SHERMAN STRUCTURAL ENGINEER
Date: JANUARY 2005
Sol No. XXXXXX
Contr No. XXXXXX
File name: XXXXX
Plot date: XXXXXX
Plot scale: XXXXXX

CDM

FORT WORTH CENTRAL CITY PRELIMINARY DESIGN

TRWD
ISOLATION GATE STRUCTURE
PLAN

SEQUENCE NO.
S-1



DESIGN FILE: S-101.DWG

Contr No.

REFERENCE FILE:
REFERENCE FILE:
REFERENCE FILE:

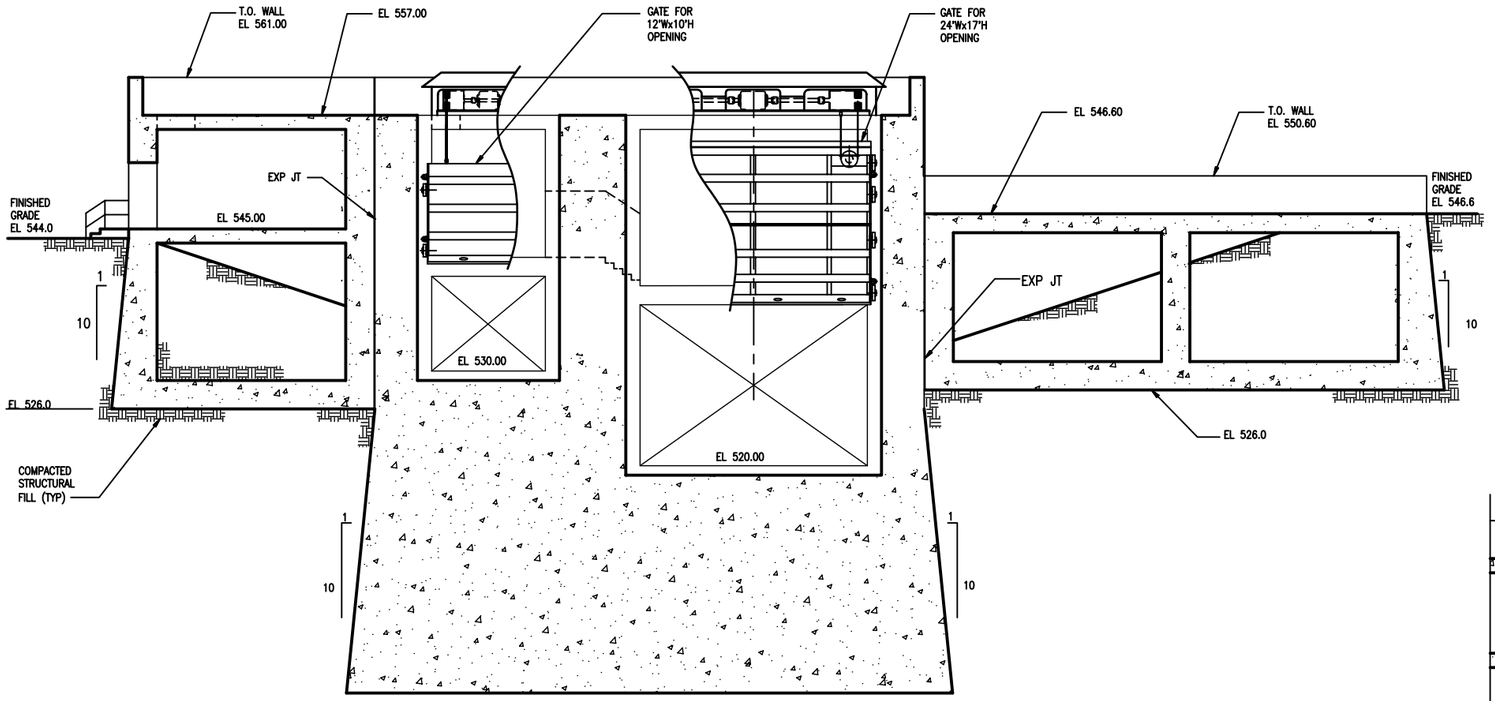


SECTION 1
1/8"=1'-0"
S-1

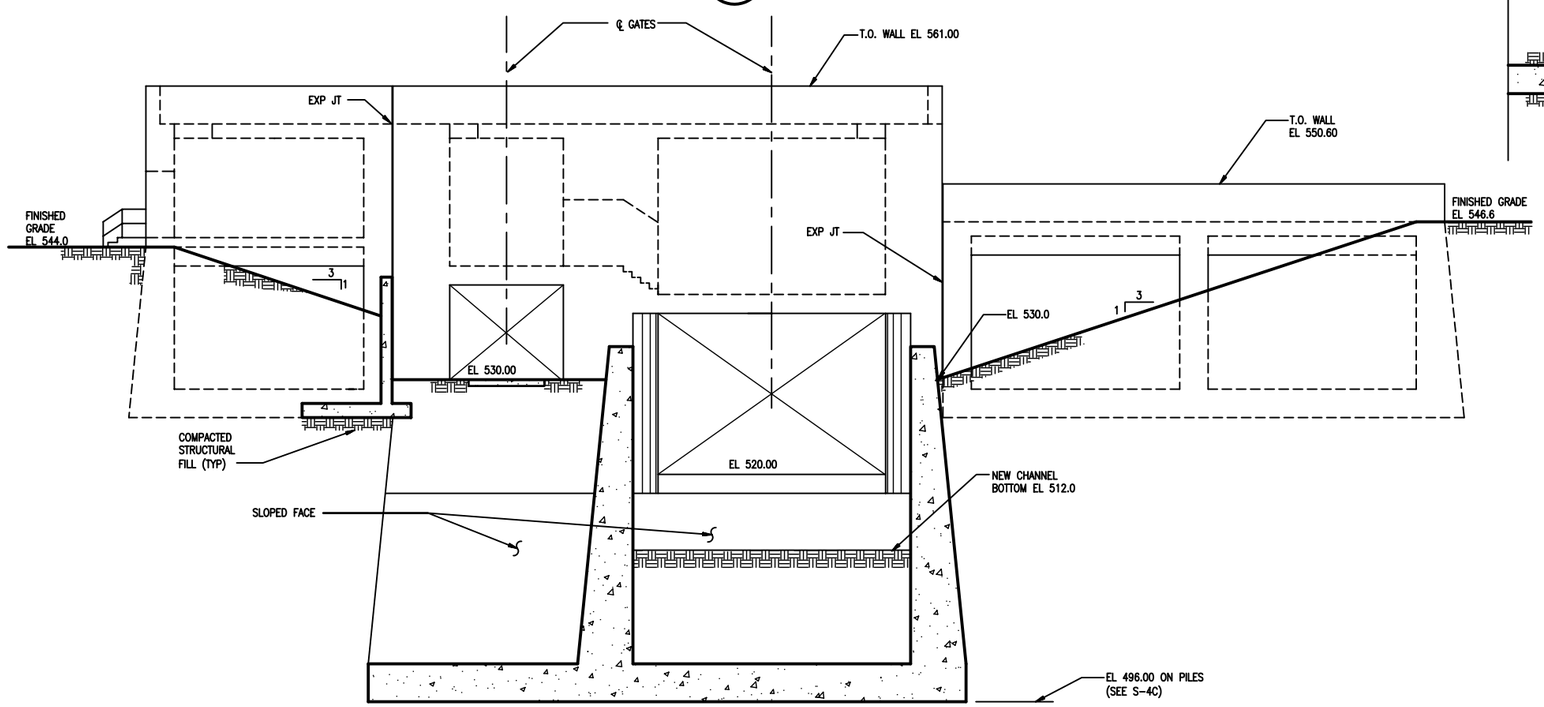


SECTION 2
1/8"=1'-0"
S-1

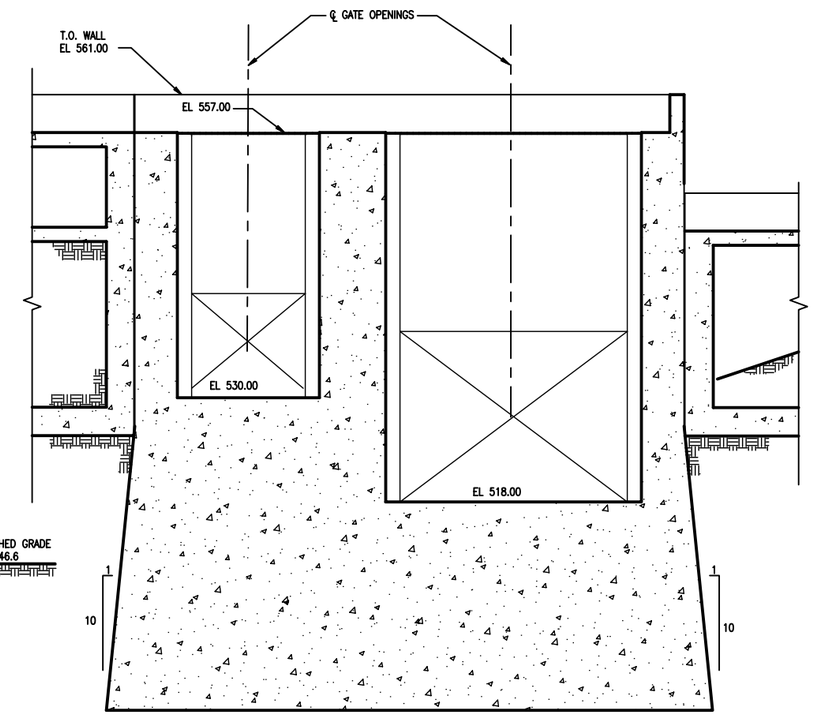


SECTION 3
1/8"=1'-0"
S-1

8' 4' 0 8'
SCALE: 1/8 ''= 1'-0"
HALF SIZE PRINT

NOT FOR CONSTRUCTION
THIS DOCUMENT IS RELEASED FOR THE PURPOSE OF INTERIM REVIEW UNDER THE AUTHORITY OF WILLIAM C. SHERMAN TEXAS NO: 68207 ON DATE: 01/05/05 IT IS NOT TO BE USED FOR CONSTRUCTION, BIDDING OR PERMIT PURPOSES.

US Army Corps of Engineers
Fort Worth District

| Symbol | Description | X | D.O. NO. | X | Action | X | Date |
|---|---|---|---|---|---|---|---|

TARRANT REGIONAL WATER DISTRICT

Designed by: B. ARCHULETTA
Dwn by: C. REDDIN
Reviewed by: W. SHERMAN
Submitted by: W. SHERMAN STRUCTURAL ENGINEER
Date: JANUARY 2005
Sol No. XXXXXX
Contr No. XXXXXX
File name: XXXXX
Plot date: XXXXX
Plot scale: XXXXXX

CDM

FORT WORTH CENTRAL CITY
PRELIMINARY DESIGN

TRWD
ISOLATION GATE STRUCTURE
LONGITUDINAL SECTIONS

SEQUENCE NO.
S-2
Sheet 92 of 139

DESIGN FILE: S-302.DWG

S:\2521\42275\STRU\as dwgs\ S-302 12/17/04 09:34 reddinco XREFS: 2521G-BS

Contr No.

REFERENCE FILE:
REFERENCE FILE:
REFERENCE FILE:

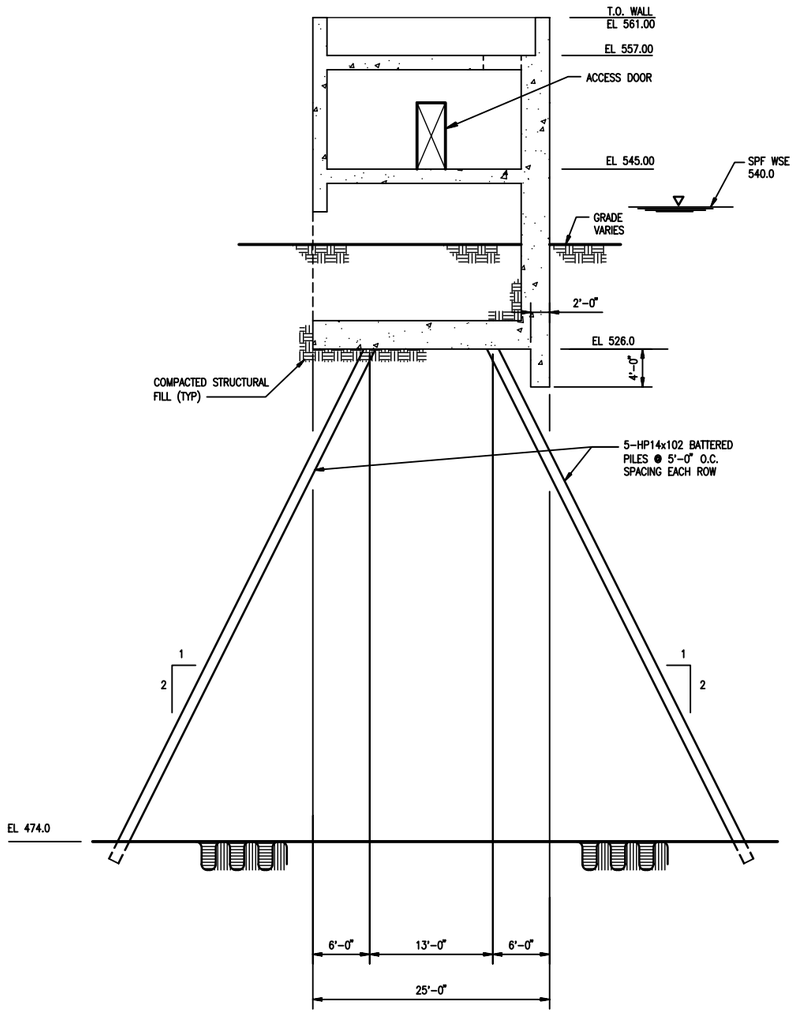


WEST ABUTMENT

SECTION 1 / S-1

1/8"=1'-0"

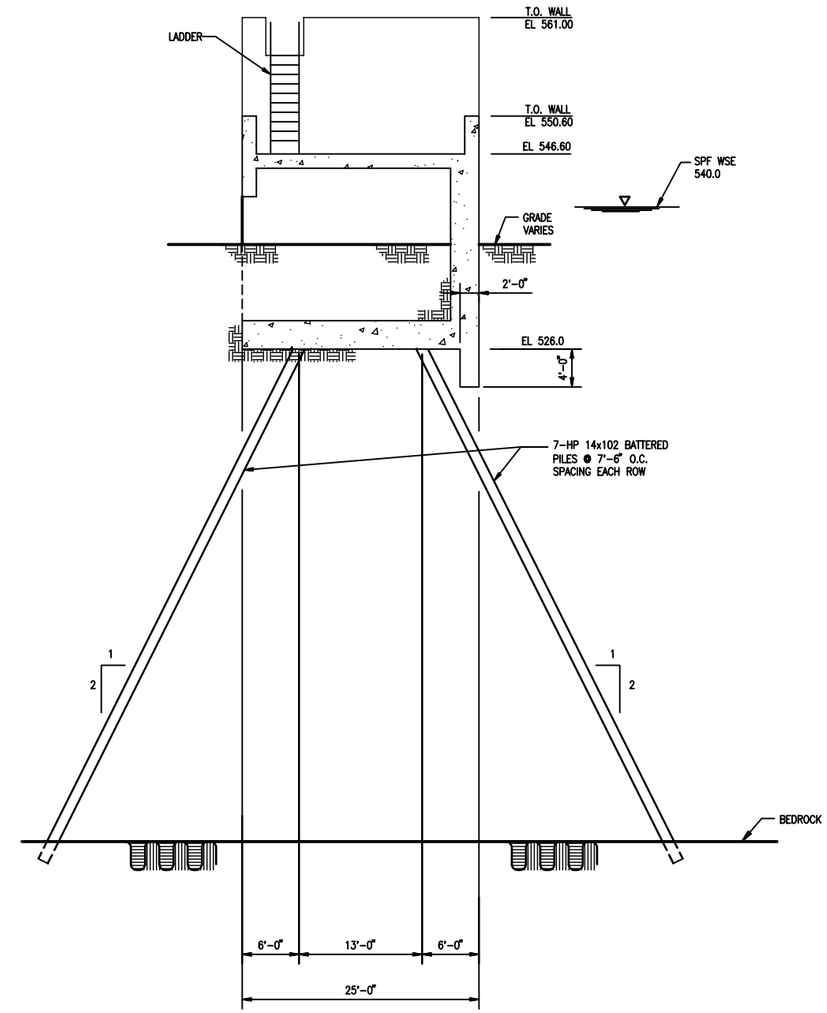


EAST ABUTMENT

SECTION 2 / S-1

1/8"=1'-0"

8' 4' 0 8'

SCALE: 1/8 ''= 1'-0"

HALF SIZE PRINT

NOT FOR CONSTRUCTION

THIS DOCUMENT IS RELEASED FOR THE PURPOSE OF INTERIM REVIEW UNDER THE AUTHORITY OF WILLIAM C. SHERMAN TEXAS NO: 68207 ON DATE: 01/05/05 IT IS NOT TO BE USED FOR CONSTRUCTION, BIDDING OR PERMIT PURPOSES.

US Army Corps of Engineers
Fort Worth District

| Symbol | Description | D.O. NO. | Action | Date |
|---|---|---|---|---|
| | | | | |

TARRANT REGIONAL WATER DISTRICT

CDM

Designed by: B. ARCHULETTA
Date: JANUARY 2005
Dwn by: C. REDDIN
Soil No. XXXXXX
Reviewed by: W. SHERMAN
Contr No. XXXXXX
Submitted by: W. SHERMAN STRUCTURAL ENGINEER
File name: XXXXXX
Plot date: XXXXXX
Plot scale: XXXXXX

DESIGN FILE: S-303.DWG

FORT WORTH CENTRAL CITY
PRELIMINARY DESIGN
TRWD
ISOLATION GATE STRUCTURE
SECTIONS AT ABUTMENTS

SEQUENCE NO.
S-3

Sheet 93 of 139

Contr No.

S:\2521\42275\TRU\as dwgs\ S-303 12/21/04 07:35 reddincp XREFS: 2521G-BS

REFERENCE FILE:
REFERENCE FILE:
REFERENCE FILE:

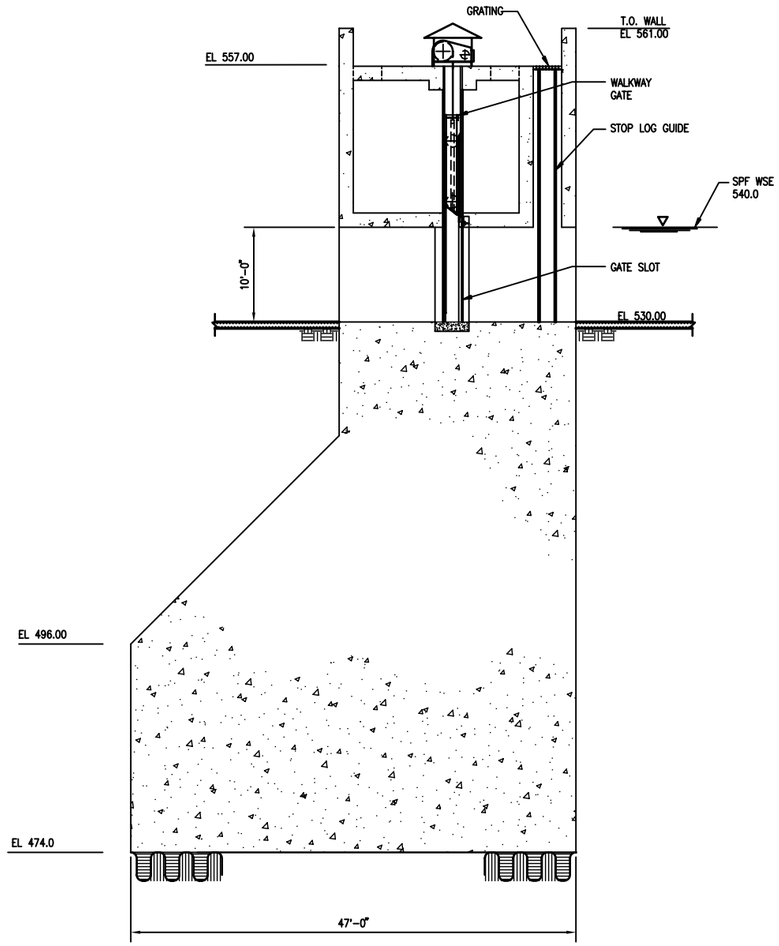


**SECTION** 1 / S-1

1/8"=1'-0"

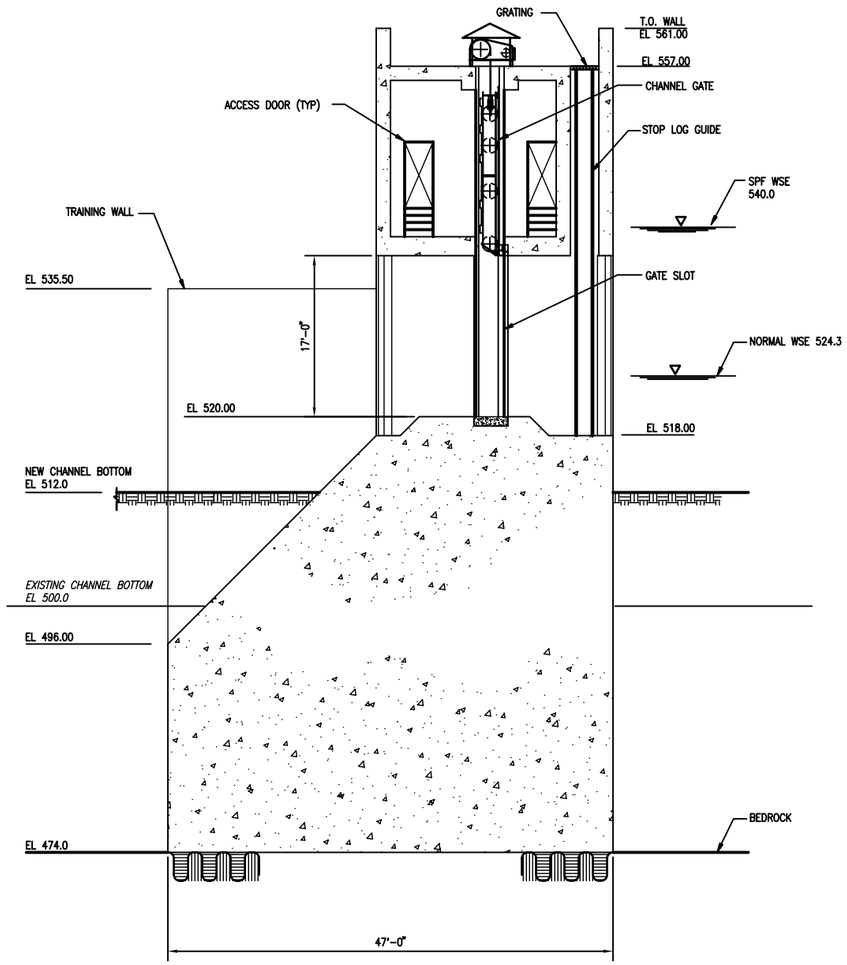


**SECTION** 2 / S-1

1/8"=1'-0"

8' 4' 0 8'

SCALE: 1/8 ''= 1'-0"

HALF SIZE PRINT

NOT FOR CONSTRUCTION

THIS DOCUMENT IS RELEASED FOR THE PURPOSE OF INTERIM REVIEW UNDER THE AUTHORITY OF WILLIAM C. SHERMAN TEXAS NO: 68207 ON DATE: 01/05/05 IT IS NOT TO BE USED FOR CONSTRUCTION, BIDDING OR PERMIT PURPOSES.

US Army Corps of Engineers
Fort Worth District

| Symbol | Description | D.O. NO. | Action | Date |
|---|---|---|---|---|
| | | xx | xx | xx |

TARRANT REGIONAL WATER DISTRICT

Designed by: B. ARCHULETTA
Dwn by: C. REDDIN
Reviewed by: W. SHERMAN
Submitted by: W. SHERMAN STRUCTURAL ENGINEER
Date: JANUARY 2005
Sol No. XXXXXX
Contr No. XXXXXX
File name: XXXXX
Plot date: XXXXXX
Plot scale: XXXXXX

CDM

FORT WORTH CENTRAL CITY PRELIMINARY DESIGN

**TRWD ISOLATION GATE STRUCTURE ROCK FOUNDATION**

SEQUENCE NO.

S-4A

Sheet 94 of 139

DESIGN FILE: S-304A.DWG

S:\2521\42275\TRU\as dwgs\ S-304A 12/20/04 08:04 reddincp XREFS: 2521b-BS

Contr No.

REFERENCE FILE:
REFERENCE FILE:
REFERENCE FILE:

XX

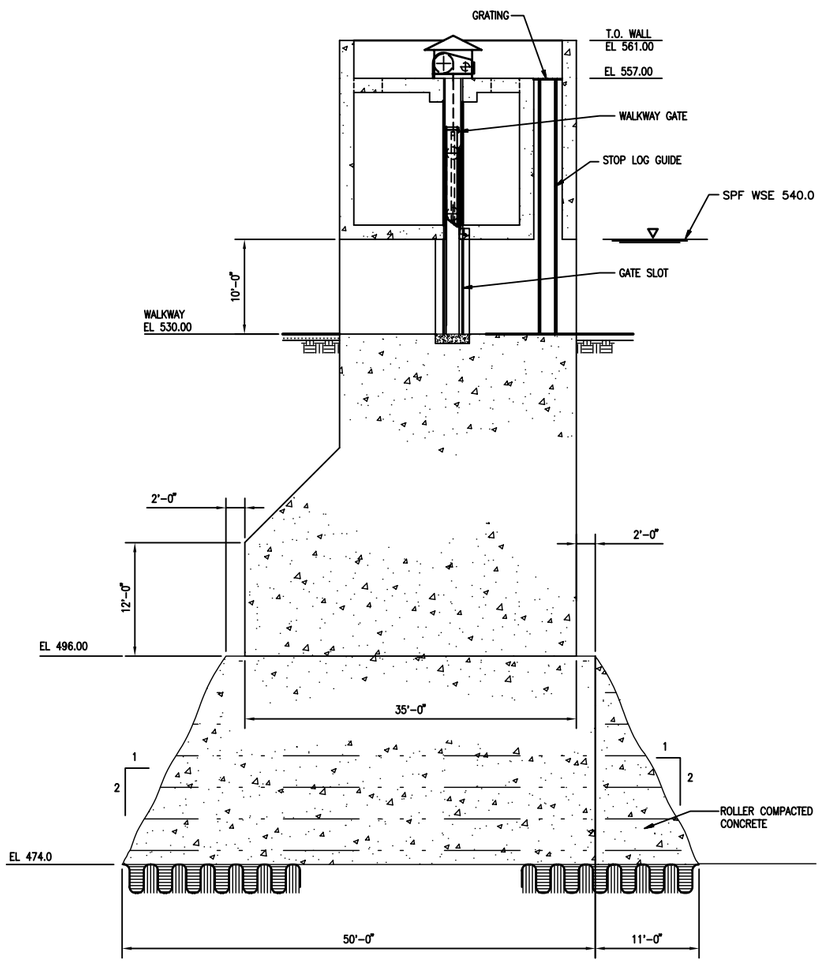


SECTION 1 (S-1)
1/8"=1'-0"

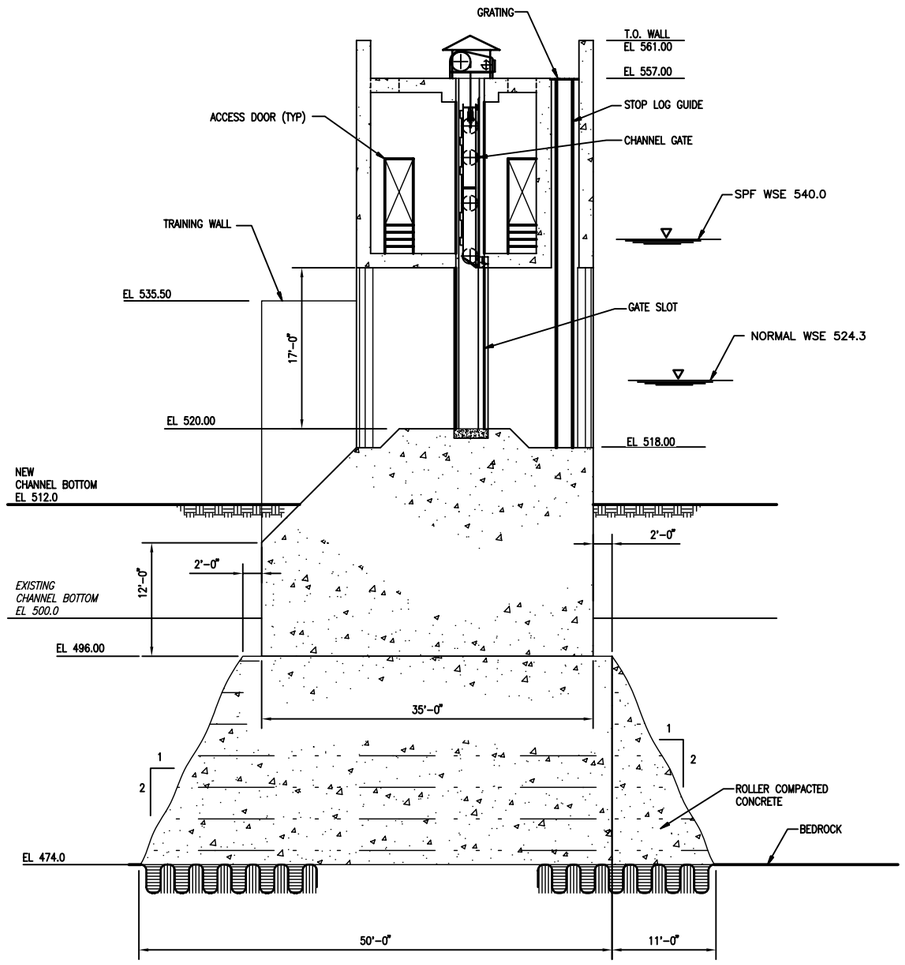


SECTION 2 (S-1)
1/8"=1'-0"

8' 4' 0 8'
SCALE: 1/8 ''= 1'-0"
HALF SIZE PRINT

NOT FOR CONSTRUCTION
THIS DOCUMENT IS RELEASED FOR THE PURPOSE OF INTERIM REVIEW UNDER THE AUTHORITY OF WILLIAM C. SHERMAN TEXAS NO: 68207 ON DATE: 01/05/05
IT IS NOT TO BE USED FOR CONSTRUCTION, BIDDING OR PERMIT PURPOSES.

US Army Corps of Engineers
Fort Worth District

| Symbol | Description | D.O. NO. | Action | Date |
|---|---|---|---|---|
| | | | | |

TARRANT REGIONAL WATER DISTRICT

Designed by: B. ARCHULETTA
Dwn by: C. REDDIN
Reviewed by: W. SHERMAN
Submitted by: W. SHERMAN STRUCTURAL ENGINEER
Date: JANUARY 2005
Sol No. XXXXXX
Contr No. XXXXXX
File name: XXXXX
Plot date: XXXXX
Plot scale: XXXXXX

CDM

FORT WORTH CENTRAL CITY PRELIMINARY DESIGN

TRWD
ISOLATION GATE STRUCTURE
RCC FOUNDATION

SEQUENCE NO.
S-4B
Sheet 95 of 139

DESIGN FILE: S-304B.DWG

S:\2521\42275\STRU\as dwgs\ S-304B 12/15/04 14:57 reddincp XREFS: 2521b-BS

Contr No.

REFERENCE FILE:
REFERENCE FILE:
REFERENCE FILE:

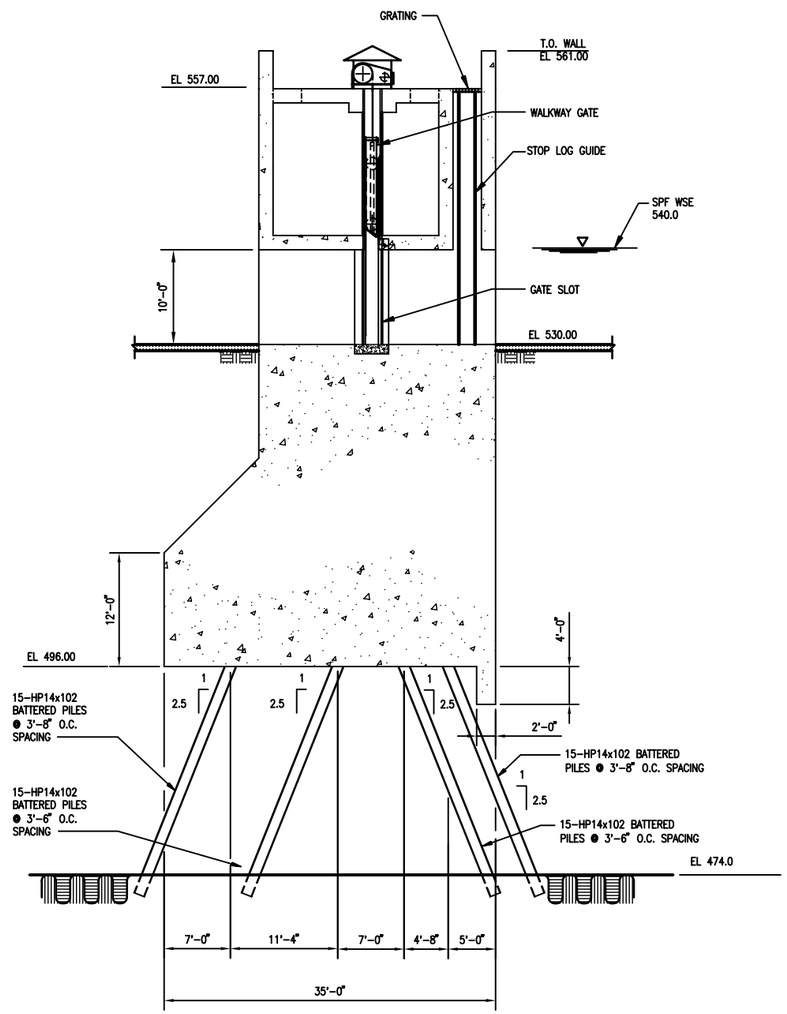


SECTION 1 (S-1)
1/8"=1'-0"

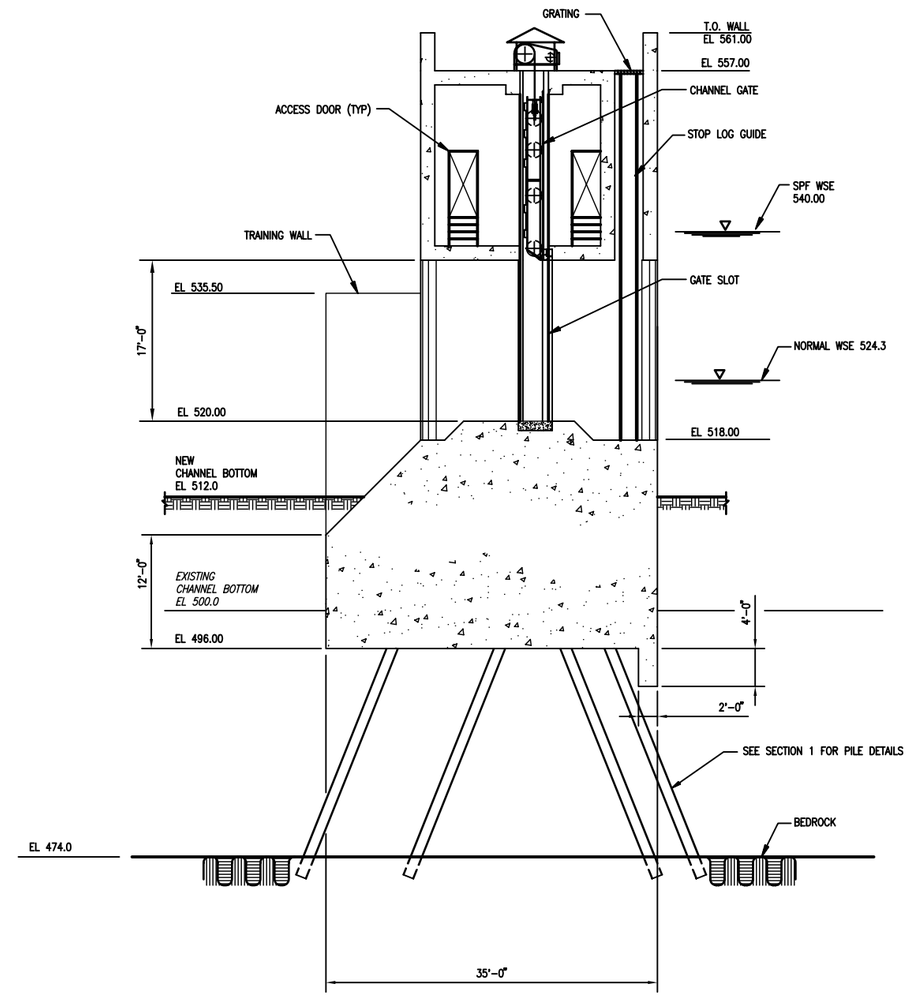


SECTION 2 (S-1)
1/8"=1'-0"

8' 4' 0 8'
SCALE: 1/8 ''= 1'-0"
HALF SIZE PRINT

NOT FOR CONSTRUCTION
THIS DOCUMENT IS RELEASED FOR THE PURPOSE OF INTERIM REVIEW UNDER THE AUTHORITY OF WILLIAM C. SHERMAN TEXAS NO: 68207 ON DATE: 01/05/05 IT IS NOT TO BE USED FOR CONSTRUCTION, BIDDING OR PERMIT PURPOSES.

US Army Corps of Engineers
Fort Worth District

| Symbol | Description | D.O. NO. | Action | Date |
|---|---|---|---|---|
| | | xx | xx | xx |

Date: JANUARY 2005
Sol No. XXXXXX
Contr No. XXXXXX
File name: XXXXX
Plot date: XXXXXX
Plot scale: XXXXXX

Designed by: B. ARCHULETTA
Dwn by: C. REDDIN
Reviewed by: W. SHERMAN
Submitted by: W. SHERMAN STRUCTURAL ENGINEER

TARRANT REGIONAL WATER DISTRICT
CDM

FORT WORTH CENTRAL CITY
PRELIMINARY DESIGN

TRWD
ISOLATION GATE STRUCTURE
PILE FOUNDATION

SEQUENCE NO.
S-4C
Sheet 96 of 139

DESIGN FILE: S-304C.DWG

S:\2521\42275\dfru\as dwgs\ S-304C 12/20/04 08:27 reddincp XREFS: 2521G-BS

Contr No.

REFERENCE FILE:
REFERENCE FILE:
REFERENCE FILE:

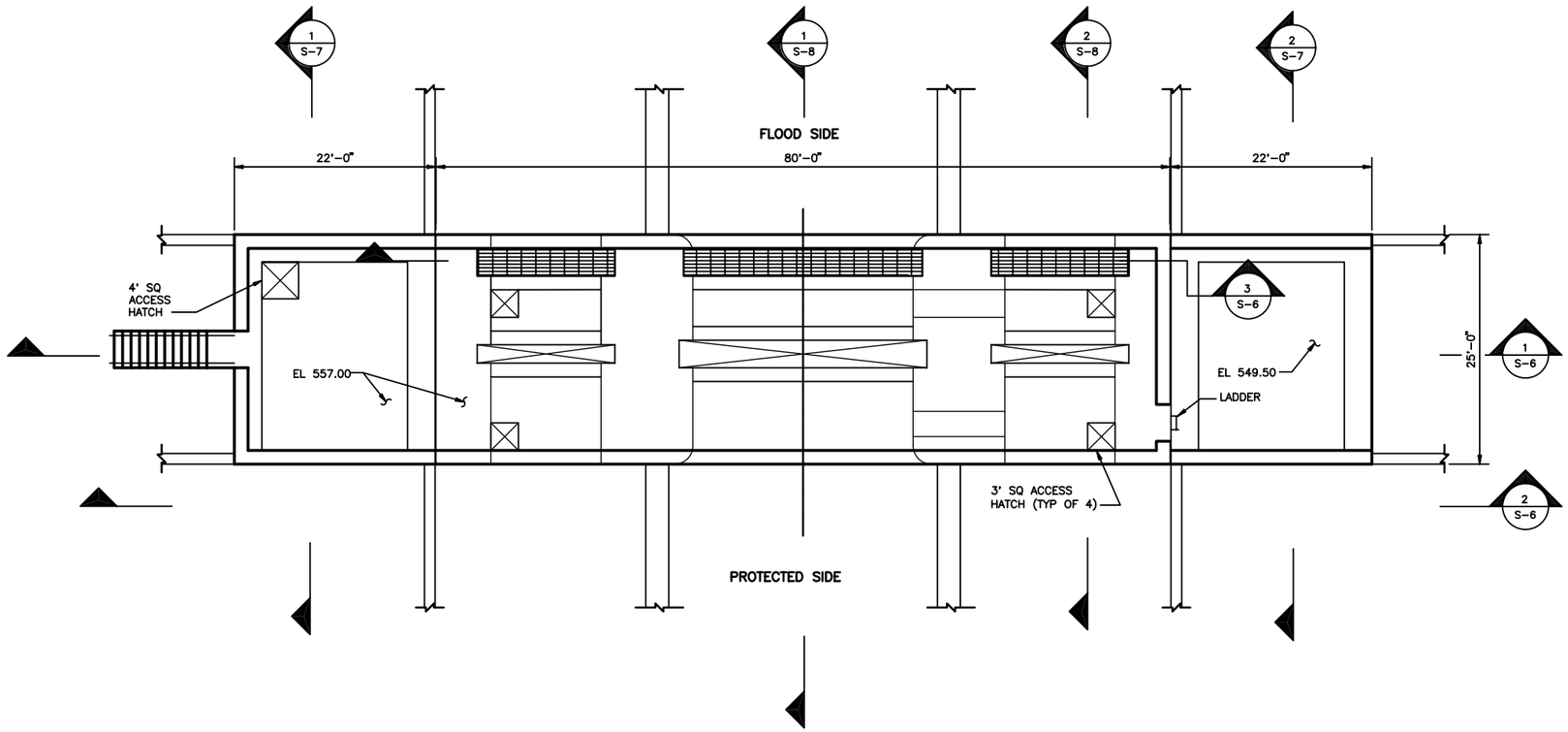


TRINITY POINT ISOLATION GATE FACILITY

## PLAN

1/8" = 1'-0"

8' 4' 0 8'

SCALE: 1/8 ''= 1'-0"

HALF SIZE PRINT

NOT FOR CONSTRUCTION

THIS DOCUMENT IS RELEASED FOR THE PURPOSE OF INTERIM REVIEW UNDER THE AUTHORITY OF WILLIAM C. SHERMAN TEXAS NO: 68207 ON DATE: 01/05/05 IT IS NOT TO BE USED FOR CONSTRUCTION, BIDDING OR PERMIT PURPOSES.

US Army Corps of Engineers
Fort Worth District

| Symbol | Description | D.O. NO. | Action | Date |
|---|---|---|---|---|
| | | xx | xx | xx |

TARRANT REGIONAL WATER DISTRICT

Designed by: B. ARCHULETTA
Dwn by: C. REDDIN
Reviewed by: W. SHERMAN
Submitted by: W. SHERMAN STRUCTURAL ENGINEER
Date: JANUARY 2005
Sol No. XXXXXX
Contr No. XXXXXX
File name: XXXXX
Plot date: XXXXXX
Plot scale: XXXXXX

CDM

FORT WORTH CENTRAL CITY
PRELIMINARY DESIGN

TRINITY POINT
ISOLATION GATE STRUCTURE
PLAN

SEQUENCE NO.
S-5

Sheet 97 of 139

DESIGN FILE: S-105.DWG

Contr No.

REFERENCE FILE:
REFERENCE FILE:
REFERENCE FILE:

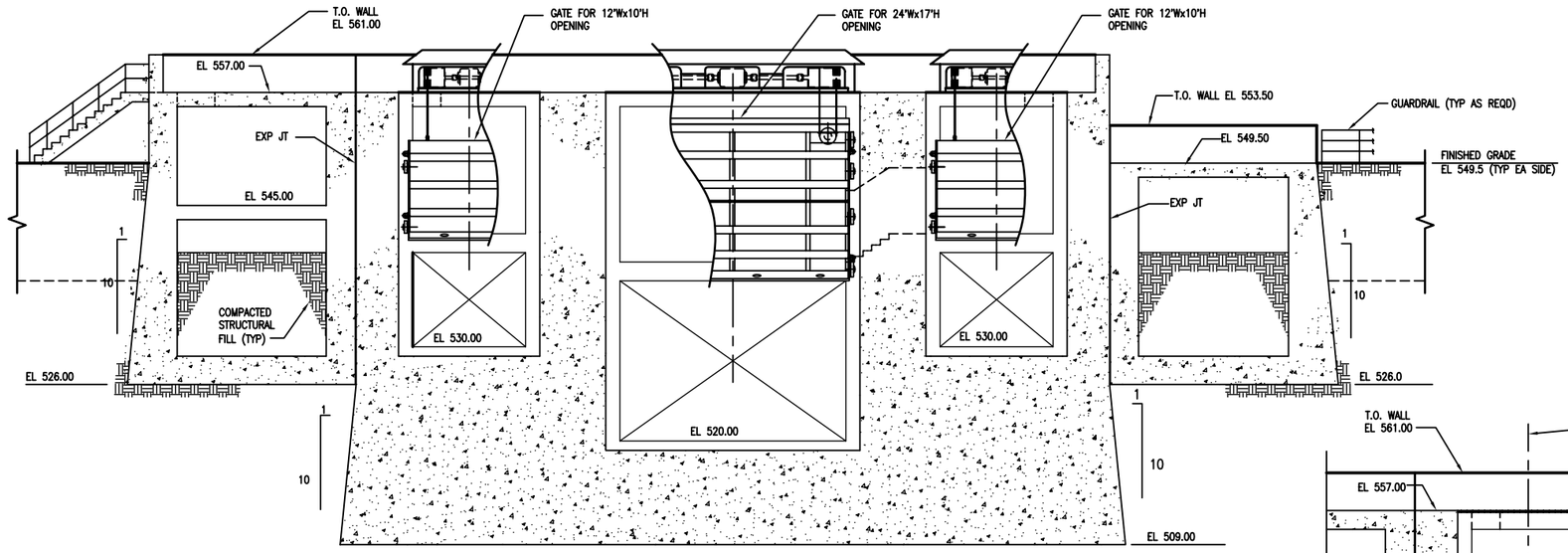


SECTION 1
1/8"=1'-0"
S-5

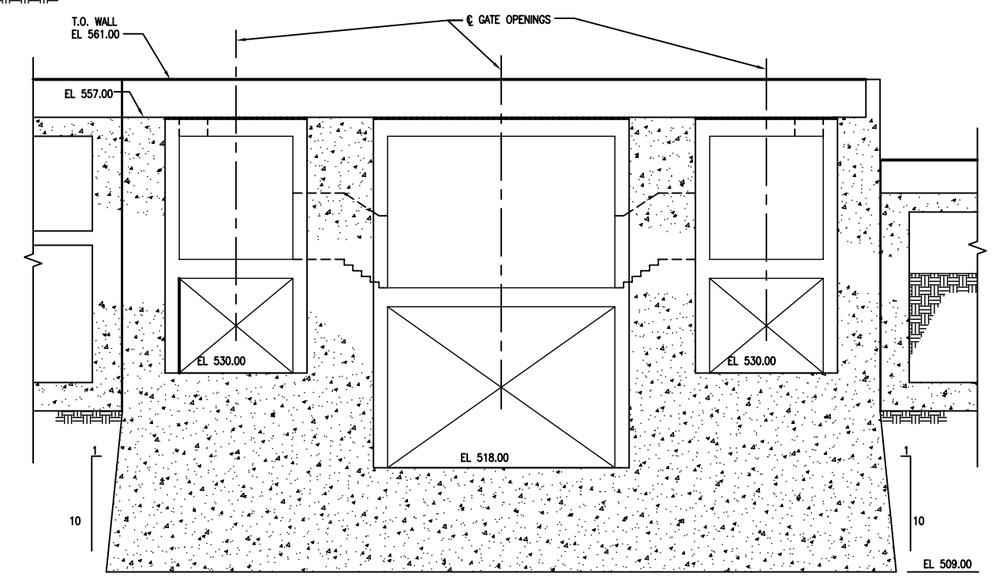


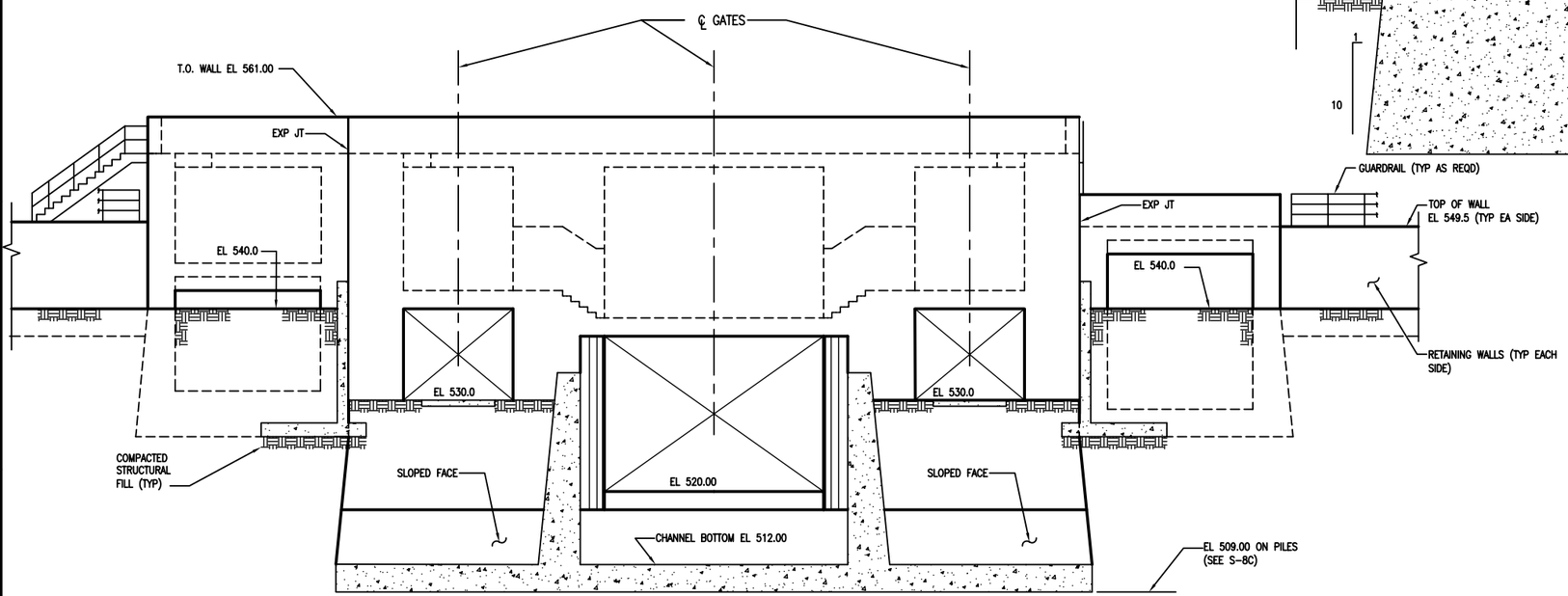


SECTION 2
1/8"=1'-0"
S-5

SECTION 3
1/8"=1'-0"
S-5

8' 4' 0 8'
SCALE: 1/8 ''= 1'-0"
HALF SIZE PRINT

NOT FOR CONSTRUCTION
THIS DOCUMENT IS RELEASED FOR THE PURPOSE OF INTERIM REVIEW UNDER THE AUTHORITY OF WILLIAM C. SHERMAN TEXAS NO: 68207 ON DATE: 01/05/05 IT IS NOT TO BE USED FOR CONSTRUCTION, BIDDING OR PERMIT PURPOSES.

US Army Corps of Engineers
Fort Worth District

| Symbol | Description | D.O. NO. | Action | Date |
|---|---|---|---|---|
| | | | | |

TARRANT REGIONAL WATER DISTRICT

Designed by: B. ARCHULETTA
Dwn by: C. REDDIN
Reviewed by: W. SHERMAN
Submitted by: W. SHERMAN STRUCTURAL ENGINEER
Date: JANUARY 2005
Sol No. XXXXXX
Contr No. XXXXXX
File name: XXXXXX
Plot date: XXXXXX
Plot scale: XXXXXX

CDM

FORT WORTH CENTRAL CITY PRELIMINARY DESIGN

TRINITY POINT
ISOLATION GATE STRUCTURE
LONGITUDINAL SECTIONS

SEQUENCE NO.
S-6

Sheet 98 of 139

DESIGN FILE: S-306.DWG

S:\2521\42275\dTRU\as dwgs\ S-306 12/21/04 14:52 dinzburam XREFS: 2521G-BS

Contr No.

REFERENCE FILE:
REFERENCE FILE:
REFERENCE FILE:

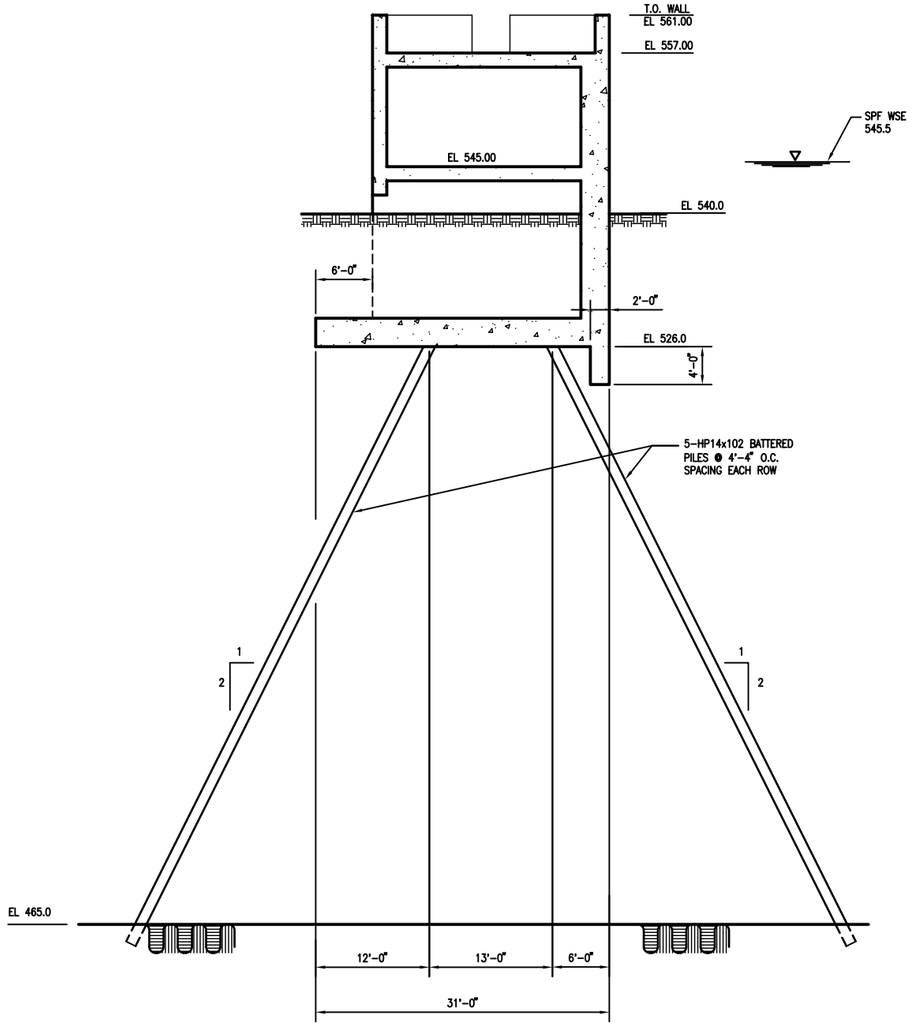


WEST ABUTMENT

SECTION 1 / S-5

1/8"=1'-0"

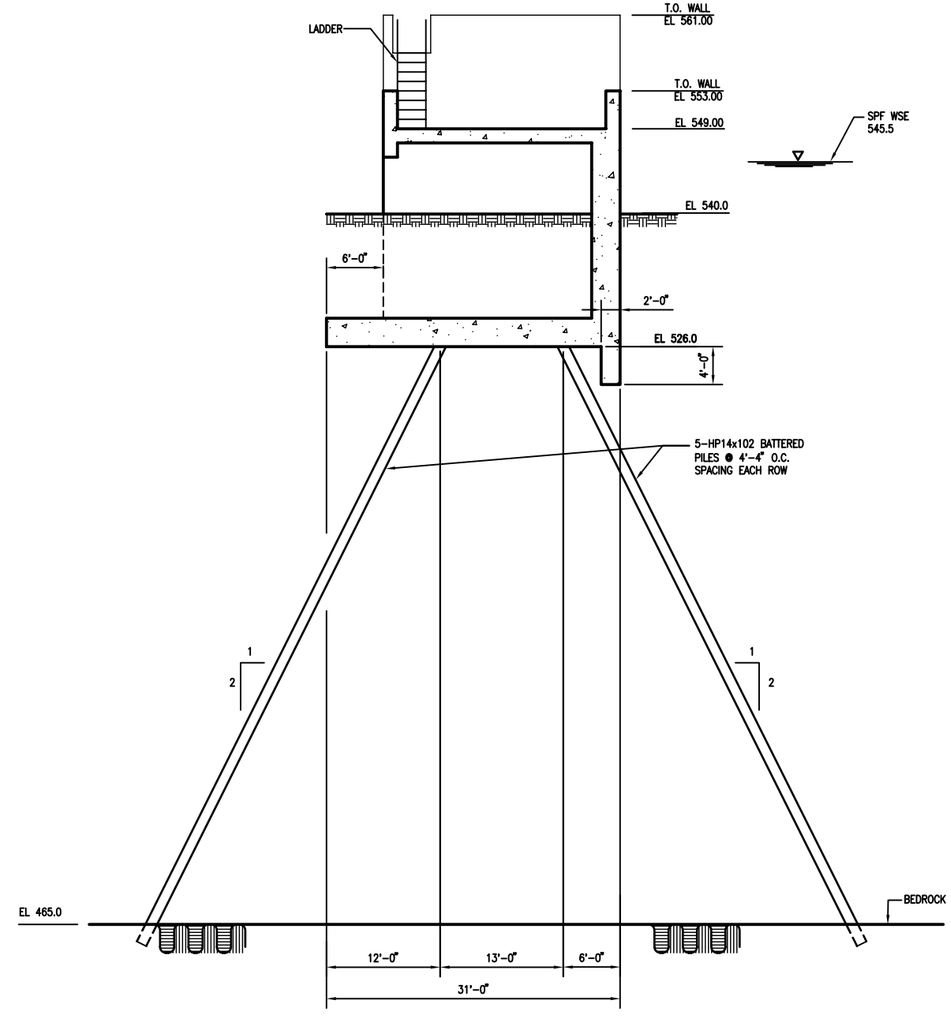


EAST ABUTMENT

SECTION 2 / S-5

1/8"=1'-0"

8' 4' 0 8'

SCALE: 1/8 ''= 1'-0"

HALF SIZE PRINT

NOT FOR CONSTRUCTION

THIS DOCUMENT IS RELEASED FOR THE PURPOSE OF INTERIM REVIEW UNDER THE AUTHORITY OF WILLIAM C. SHERMAN TEXAS NO: 68207 ON DATE: 01/05/05 IT IS NOT TO BE USED FOR CONSTRUCTION, BIDDING OR PERMIT PURPOSES.

US Army Corps of Engineers
Fort Worth District

| Symbol | Description | D.O. NO. | Action | Date |
|---|---|---|---|---|
| | | | | |

TARRANT REGIONAL WATER DISTRICT

CDM

Designed by: B. ARCHULETTA
Date: JANUARY 2005
Dwn by: C. REDDIN
Sol No. XXXXXX
Reviewed by: W. SHERMAN
Contr No. XXXXXX
Submitted by: W. SHERMAN STRUCTURAL ENGINEER
File name: XXXXX
Plot date: XXXXXX
Plot scale: XXXXXX

DESIGN FILE: S-307.DWG

FORT WORTH CENTRAL CITY
PRELIMINARY DESIGN
TRINITY POINT
ISOLATION GATE STRUCTURE
SECTIONS AT ABUTMENTS

SEQUENCE NO.
S-7



Contr No.

S:\2521\42275\STRU\as dwgs\ S-307 12/21/04 11:59 ainzburam XREFS: 2521G-BS

REFERENCE FILE:
REFERENCE FILE:
REFERENCE FILE:

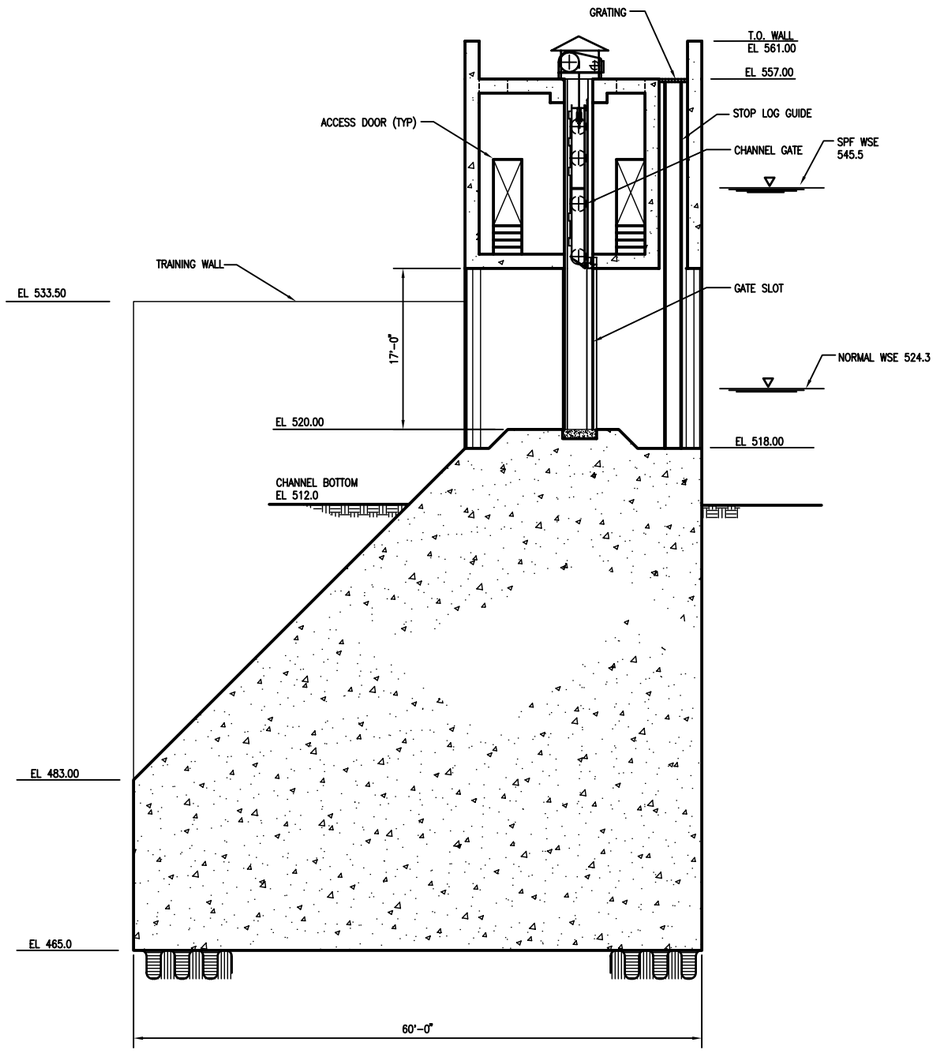


SECTION 1
1/8"=1'-0"
S-5

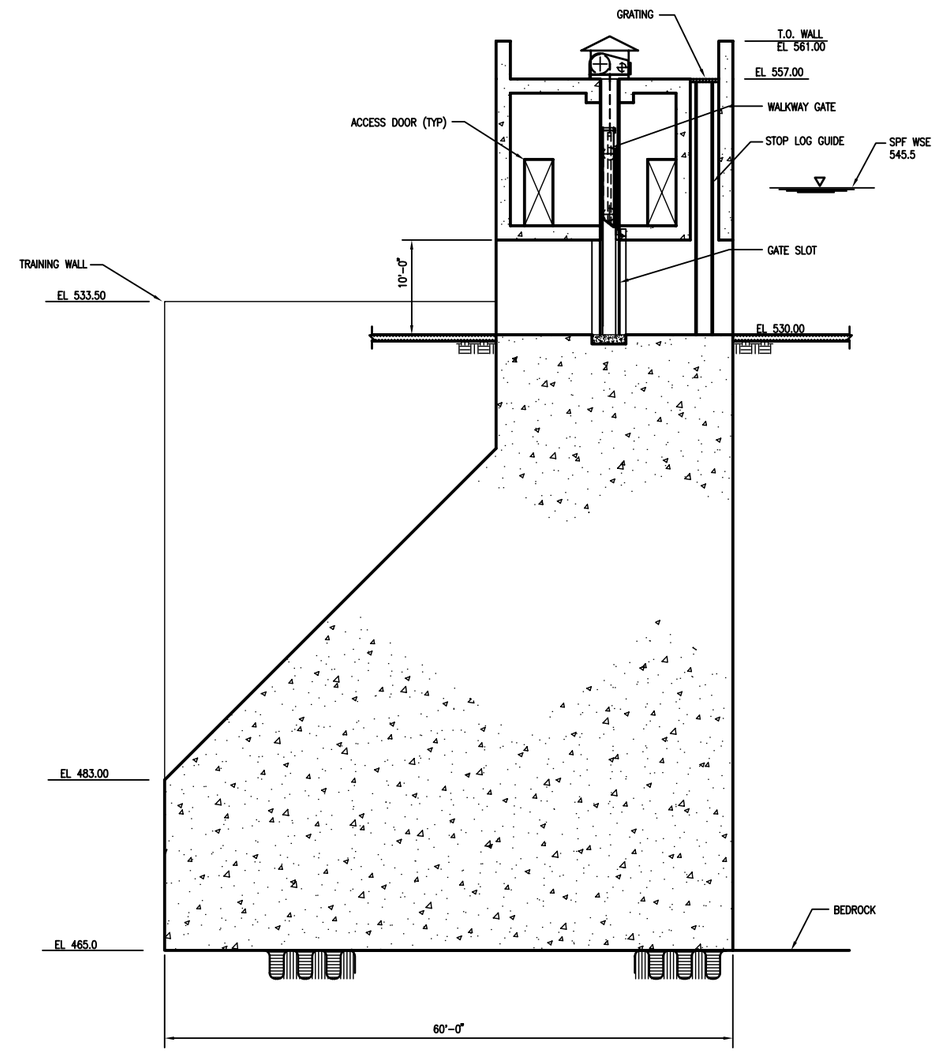


SECTION 2
1/8"=1'-0"
S-5

8' 4' 0 8'
SCALE: 1/8 ''= 1'-0"
HALF SIZE PRINT

NOT FOR CONSTRUCTION
THIS DOCUMENT IS RELEASED FOR THE PURPOSE OF INTERIM REVIEW UNDER THE AUTHORITY OF WILLIAM C. SHERMAN TEXAS NO: 68207 ON DATE: 01/05/05 IT IS NOT TO BE USED FOR CONSTRUCTION, BIDDING OR PERMIT PURPOSES.

US Army Corps of Engineers
Fort Worth District

| Symbol | Description | D.O. NO. | Action | Date |
|---|---|---|---|---|
| | | xx | xx | xx |

TARRANT REGIONAL WATER DISTRICT

Designed by: B. ARCHULETTA
Dwn by: C. REDDIN
Reviewed by: W. SHERMAN
Submitted by: W. SHERMAN STRUCTURAL ENGINEER
Date: JANUARY 2005
Sol No. XXXXXX
Contr No. XXXXXX
File name: XXXXX
Plot date: XXXXXX
Plot scale: XXXXXX

CDM

FORT WORTH CENTRAL CITY PRELIMINARY DESIGN

# TRINITY POINT ISOLATION GATE STRUCTURE ROCK FOUNDATION

SEQUENCE NO.
S-8A
Sheet 100 of 139

DESIGN FILE: S-308A.DWG

S:\2521\42275\STRU\as dwgs\ S-308A 12/20/04 08:47 reddinp XREFS: 2521b-BS

Contr No.

REFERENCE FILE:
REFERENCE FILE:
REFERENCE FILE:

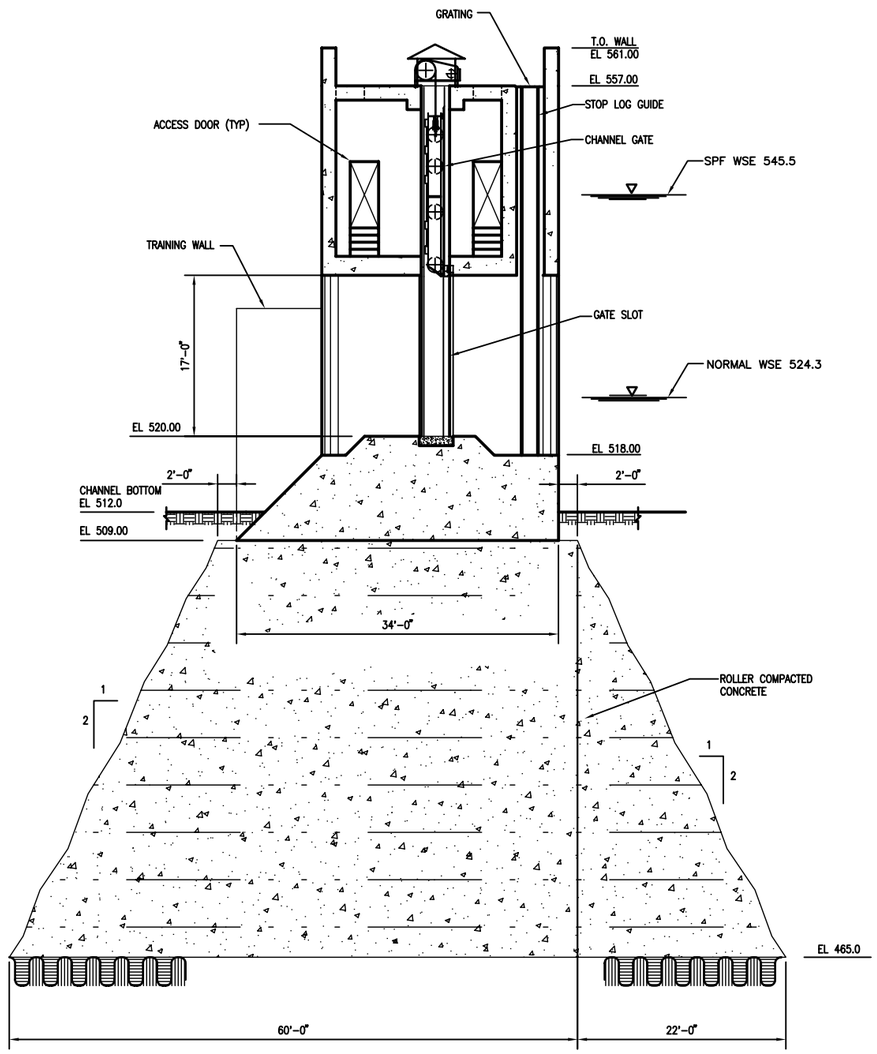


SECTION 1 (S-5)
1/8"=1'-0"

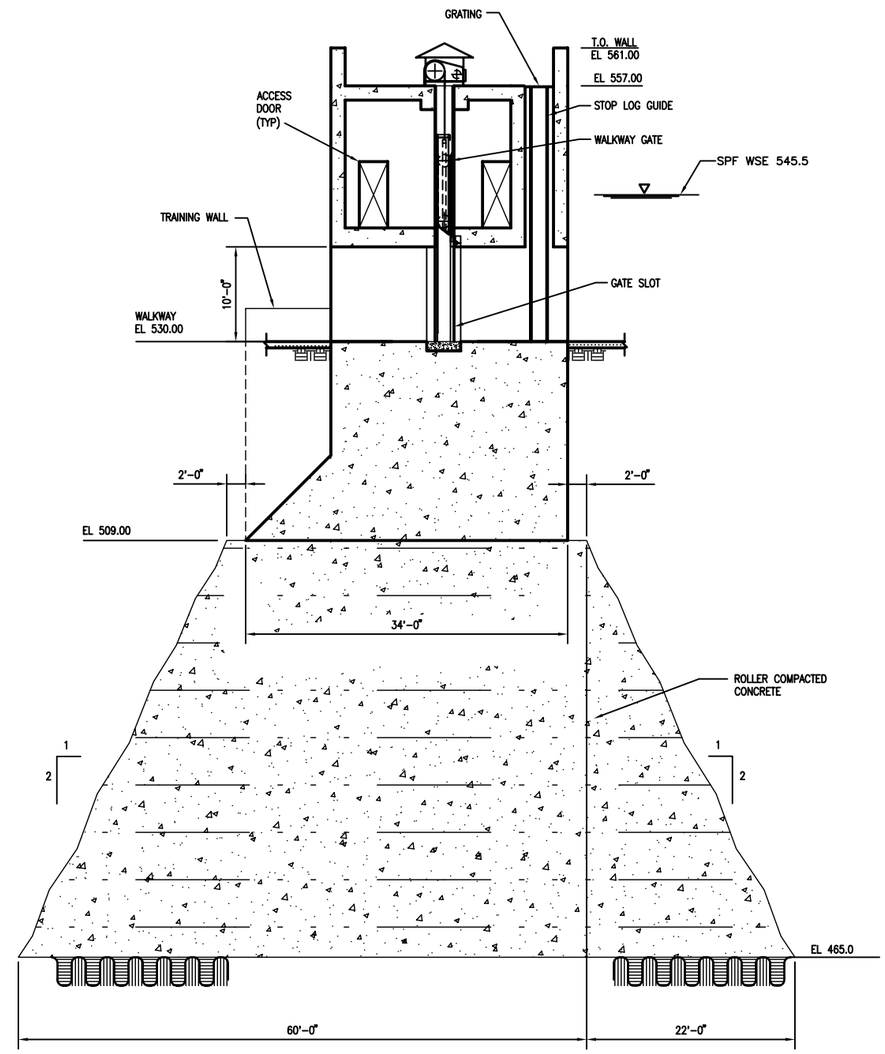


SECTION 2 (S-5)
1/8"=1'-0"

8' 4' 0 8'
SCALE: 1/8 ''= 1'-0"
HALF SIZE PRINT

NOT FOR CONSTRUCTION
THIS DOCUMENT IS RELEASED FOR THE PURPOSE OF INTERIM REVIEW UNDER THE AUTHORITY OF WILLIAM C. SHERMAN TEXAS NO: 68207 ON DATE: 01/05/05 IT IS NOT TO BE USED FOR CONSTRUCTION, BIDDING OR PERMIT PURPOSES.

US Army Corps of Engineers
Fort Worth District

| Symbol | Description | D.O. NO. | Action | Date |
|---|---|---|---|---|
| | | | | |

TARRANT REGIONAL WATER DISTRICT

Designed by: B. ARCHULETTA
Dwn by: C. REDDIN
Reviewed by: W. SHERMAN
Submitted by: W. SHERMAN STRUCTURAL ENGINEER
Date: JANUARY 2005
Sol No. XXXXXX
Contr No. XXXXXX
File name: XXXXXX
Plot date: XXXXXX
Plot scale: XXXXXX

CDM

FORT WORTH CENTRAL CITY
PRELIMINARY DESIGN

TRINITY POINT
ISOLATION GATE STRUCTURE
RCC FOUNDATION

SEQUENCE NO.
S-8B
Sheet 101 of 139

DESIGN FILE: S-308B.DWG

Contr No. S:\2521\42275\STRU\as dwas\ S-308B 12/20/04 10:09 reddincp XREFS: 2521b-BS

REFERENCE FILE:
REFERENCE FILE:
REFERENCE FILE:

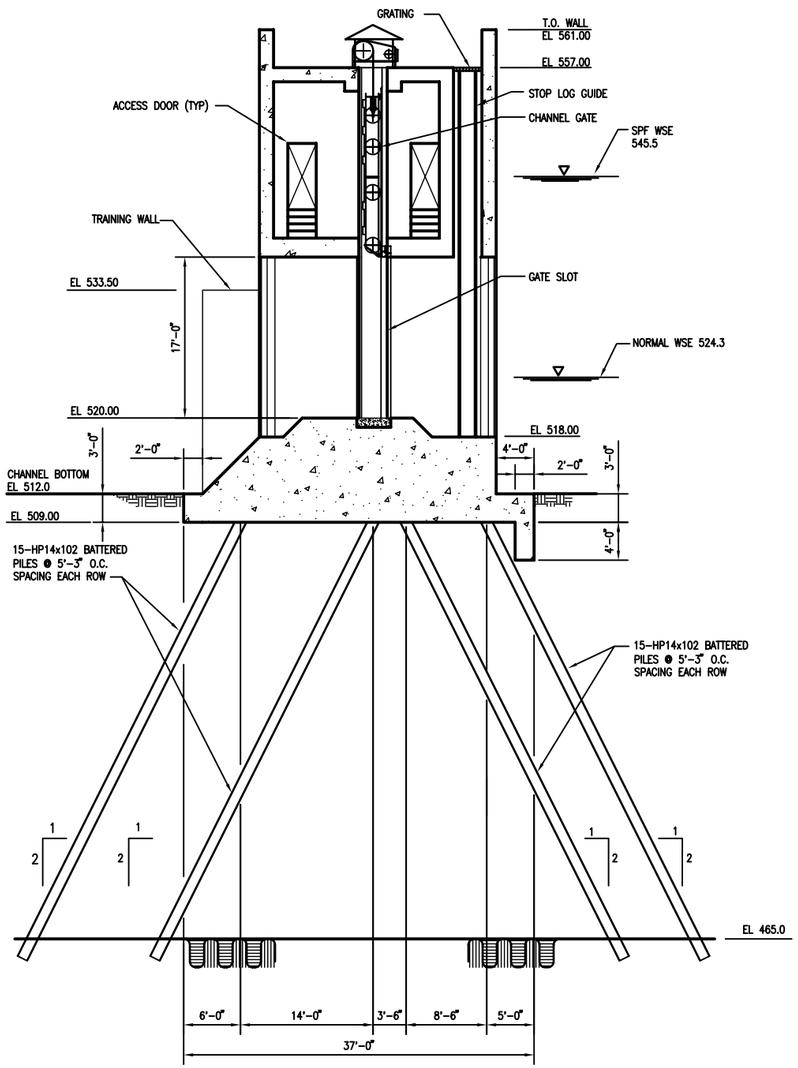


SECTION 1
1/8"=1'-0"
S-5

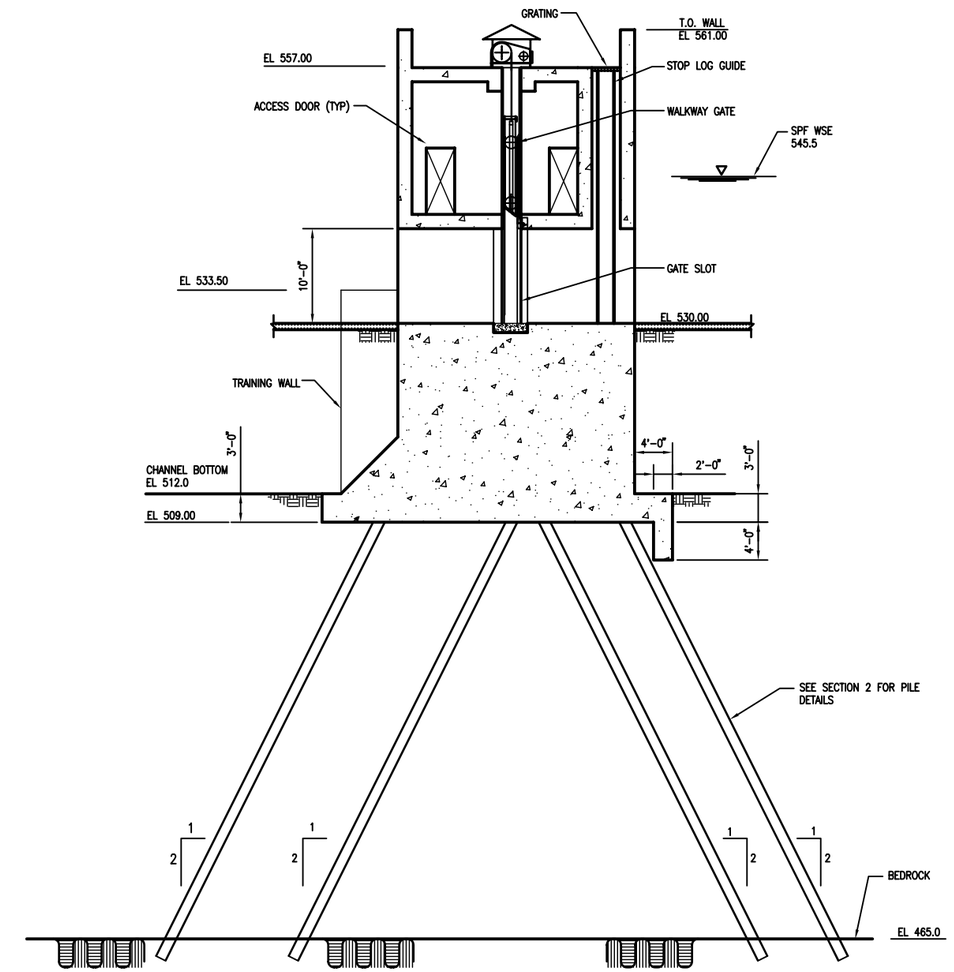


SECTION 2
1/8"=1'-0"
S-5

8' 4' 0 8'
SCALE: 1/8 ''= 1'-0"
HALF SIZE PRINT

NOT FOR CONSTRUCTION
THIS DOCUMENT IS RELEASED FOR THE PURPOSE OF INTERIM REVIEW UNDER THE AUTHORITY OF WILLIAM C. SHERMAN TEXAS NO: 68207 ON DATE: 01/05/05 IT IS NOT TO BE USED FOR CONSTRUCTION, BIDDING OR PERMIT PURPOSES.

US Army Corps of Engineers
Fort Worth District

| Symbol | Description | D.O. NO. | Action | Date |
|---|---|---|---|---|
| | | xx | xx | xx |

Designed by: B. ARCHULETTA
Dwn by: C. REDDIN
Reviewed by: W. SHERMAN
Submitted by: W. SHERMAN STRUCTURAL ENGINEER
Date: JANUARY 2005
Sol No. XXXXXX
Contr No. XXXXXX
File name: XXXXX
Plot date: XXXXX
Plot scale: XXXXXX

TARRANT REGIONAL WATER DISTRICT

CDM

FORT WORTH CENTRAL CITY
PRELIMINARY DESIGN

TRINITY POINT
ISOLATION GATE STRUCTURE
PILE FOUNDATION

SEQUENCE NO.
S-8C
Sheet 102 of 139

DESIGN FILE: S-308C.DWG

S:\2521\42275\dtru\as dwgs\ S-308C 12/21/04 08:09 reddincp XREFS: 2521G-BS

Contr No.

REFERENCE FILE:
REFERENCE FILE:
REFERENCE FILE:

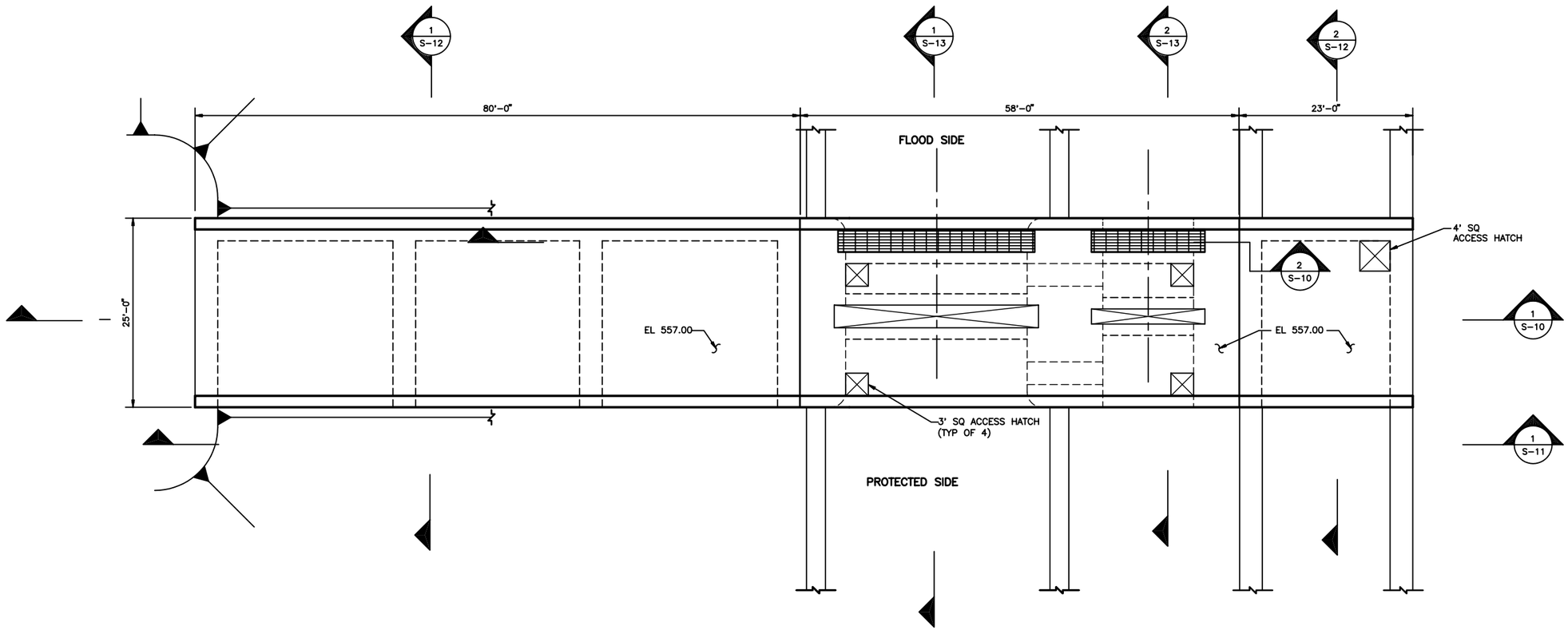


CLEAR FORK POINT ISOLATION GATE FACILITY

**PLAN**

1/8" = 1'-0"

8' 4' 0 8'

SCALE: 1/8 ''= 1'-0"

HALF SIZE PRINT

NOT FOR CONSTRUCTION

THIS DOCUMENT IS RELEASED FOR THE PURPOSE OF INTERIM REVIEW UNDER THE AUTHORITY OF WILLIAM C. SHERMAN TEXAS NO: 68207 ON DATE: 01/05/05 IT IS NOT TO BE USED FOR CONSTRUCTION, BIDDING OR PERMIT PURPOSES.

US Army Corps of Engineers
Fort Worth District

| Symbol | Description | D.O. NO. | Action | Date |
|---|---|---|---|---|
| | | | | |

TARRANT REGIONAL WATER DISTRICT

Designed by: B. ARCHULETTA
Dwn by: C. REDDIN
Reviewed by: W. SHERMAN
Submitted by: W. SHERMAN STRUCTURAL ENGINEER
Date: JANUARY 2005
Sol No. XXXXXX
Contr No. XXXXXX
File name: XXXXX
Plot date: XXXXX
Plot scale: XXXXXX

CDM

FORT WORTH CENTRAL CITY
PRELIMINARY DESIGN

**CLEAR FORK ISOLATION GATE STRUCTURE PLAN**

SEQUENCE NO.
S-9

Sheet 103 of 139

DESIGN FILE: S-109.DWG

REFERENCE FILE:
REFERENCE FILE:
REFERENCE FILE:

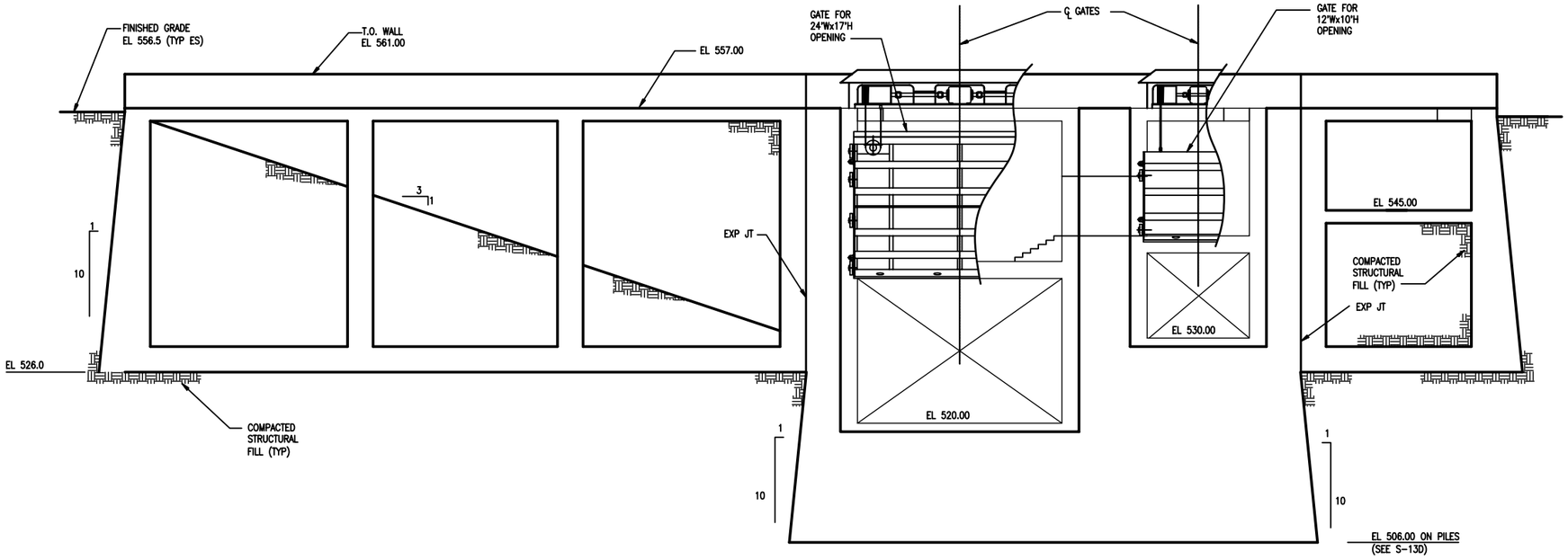


SECTION 1 (S-9)
1/8"=1'-0"

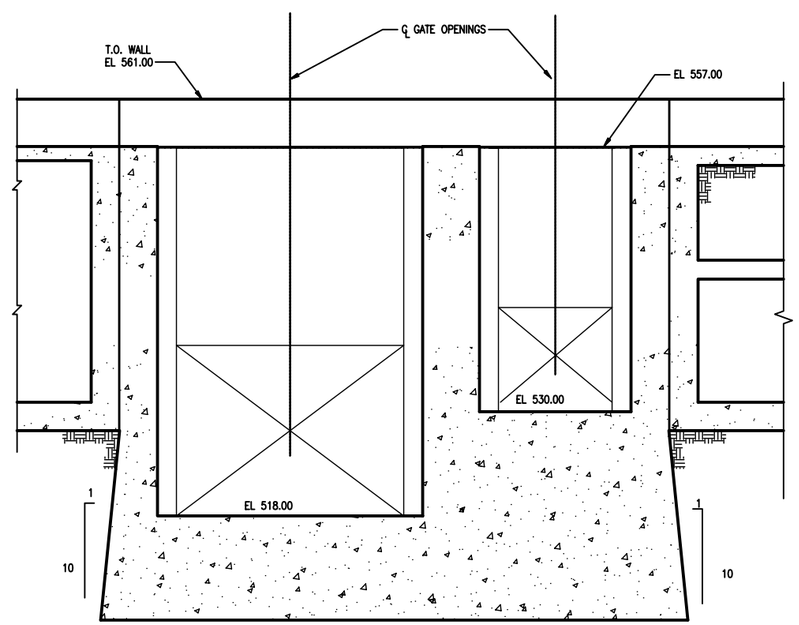


SECTION 2 (S-9)
1/8"=1'-0"

8' 4' 0 8'
SCALE: 1/8 ''= 1'-0"
HALF SIZE PRINT

NOT FOR CONSTRUCTION
THIS DOCUMENT IS RELEASED FOR THE PURPOSE OF INTERIM REVIEW UNDER THE AUTHORITY OF WILLIAM C. SHERMAN TEXAS NO: 68207 ON DATE: 01/05/05 IT IS NOT TO BE USED FOR CONSTRUCTION, BIDDING OR PERMIT PURPOSES.

US Army Corps of Engineers
Fort Worth District

| Symbol | Description | D.O. NO. | Action | Date |
|---|---|---|---|---|
| | | xx | xx | xx |

TARRANT REGIONAL WATER DISTRICT

Designed by: B. ARCHULETTA
Dwn. by: C. REDDIN
Reviewed by: W. SHERMAN
Submitted by: W. SHERMAN STRUCTURAL ENGINEER
Date: JANUARY 2005
Sol No. XXXXXX
Contr No. XXXXXX
File name: XXXXX
Plot date: XXXXXX
Plot scale: XXXXXX

CDM

FORT WORTH CENTRAL CITY
PRELIMINARY DESIGN

# CLEAR FORK ISOLATION GATE STRUCTURE LONGITUDINAL SECTIONS I

SEQUENCE NO.
S-10
Sheet 104 of 139

DESIGN FILE: S-310.DWG

S:\2521\42275\STRU\as dwgs\ S-310 12/16/04 11:43 reddincp XREFS: 2521G-BS

Contr No.

REFERENCE FILE:
REFERENCE FILE:
REFERENCE FILE:

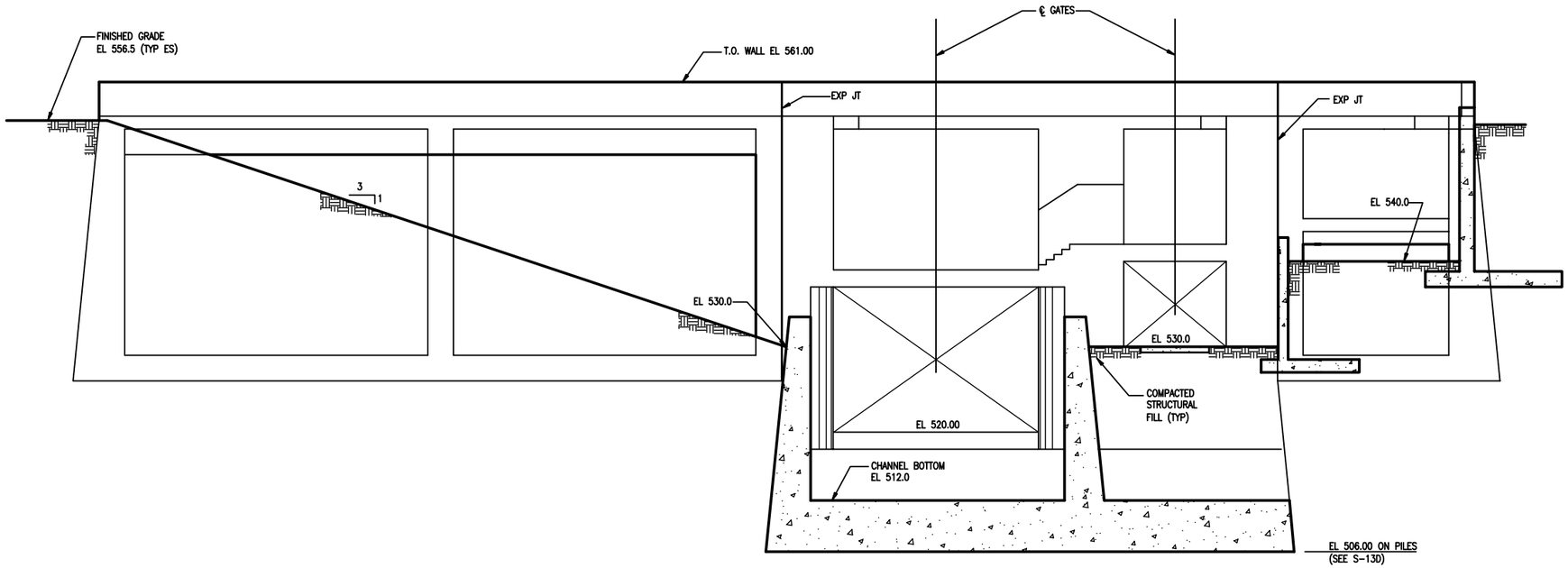


SECTION 1 / S-9
1/8"=1'-0"

8' 4' 0 8'
SCALE: 1/8 ''= 1'-0"
HALF SIZE PRINT

NOT FOR CONSTRUCTION
THIS DOCUMENT IS RELEASED FOR THE PURPOSE OF INTERIM REVIEW UNDER THE AUTHORITY OF WILLIAM C. SHERMAN TEXAS NO: 68207 ON DATE: 01/05/05 IT IS NOT TO BE USED FOR CONSTRUCTION, BIDDING OR PERMIT PURPOSES.

US Army Corps of Engineers
Fort Worth District

| Symbol | Description | D.O. NO. | Action | Date |
|---|---|---|---|---|
| | | | | |

TARRANT REGIONAL WATER DISTRICT

Designed by: B. ARCHULETTA
Date: JANUARY 2005
Dwn by: C. REDDIN
Sol No. XXXXXX
Reviewed by: W. SHERMAN
Contr No. XXXXXX
Submitted by: W. SHERMAN STRUCTURAL ENGINEER
File name: XXXXX
Plot date: XXXXXX
Plot scale: XXXXXX

CDM

FORT WORTH CENTRAL CITY
PRELIMINARY DESIGN

CLEAR FORK
ISOLATION GATE STRUCTURE
LONGITUDINAL SECTIONS II

SEQUENCE NO.
S-11
Sheet 105 of 139

DESIGN FILE: S-311.DWG

S:\2521\42275\STRU\as dwgs\ S-311 01/05/05 15:07 ainzburam XREFS: 2521G-BS

Contr No.

REFERENCE FILE:
REFERENCE FILE:
REFERENCE FILE:

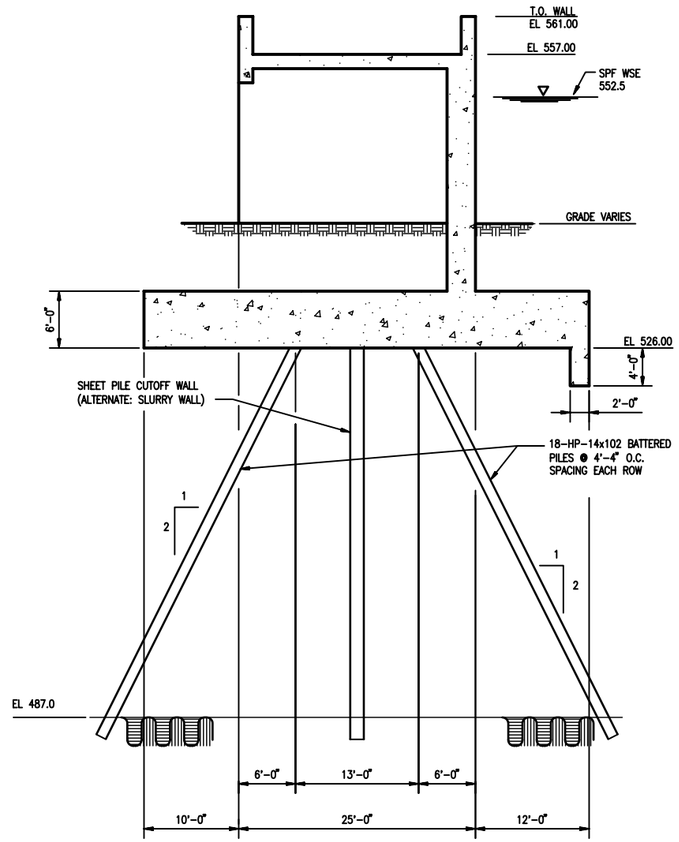


EAST ABUTMENT

SECTION 1 / S-9

1/8"=1'-0"

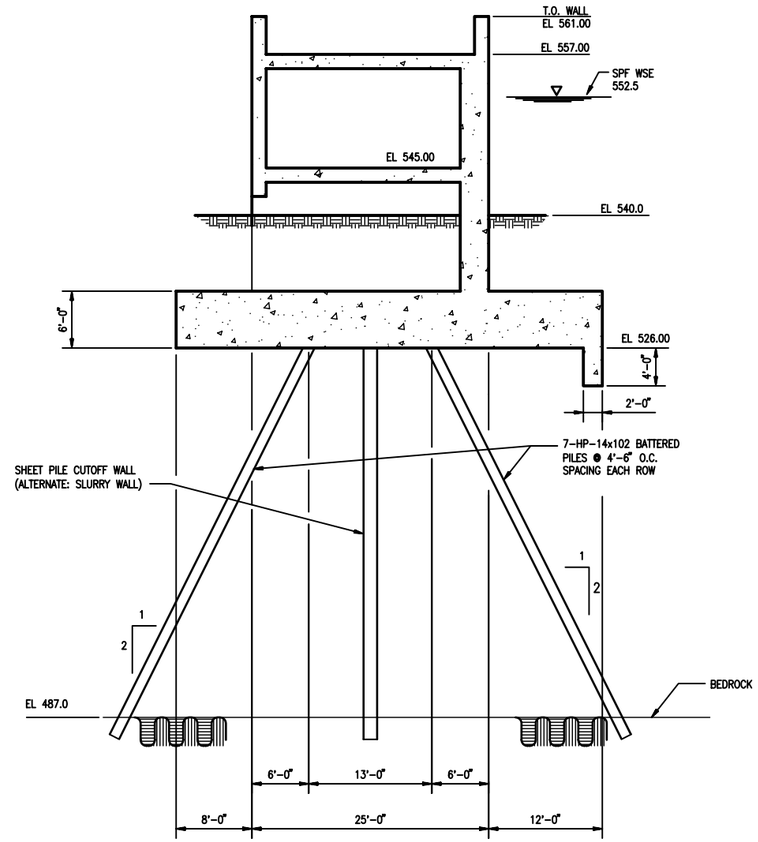


WEST ABUTMENT

SECTION 2 / S-9

1/8"=1'-0"

8' 4' 0 8'

SCALE: 1/8 ''= 1'-0"

HALF SIZE PRINT

NOT FOR CONSTRUCTION

THIS DOCUMENT IS RELEASED FOR THE PURPOSE OF INTERIM REVIEW UNDER THE AUTHORITY OF WILLIAM C. SHERMAN TEXAS NO: 68207 ON DATE: 01/05/05 IT IS NOT TO BE USED FOR CONSTRUCTION, BIDDING OR PERMIT PURPOSES.

US Army Corps of Engineers
Fort Worth District

| Symbol | Description | X | D.O. NO. | X | Action | X | Date |
|---|---|---|---|---|---|---|---|

TARRANT REGIONAL WATER DISTRICT

CDM

Designed by: B. ARCHULETTA
Date: JANUARY 2005
Dwn by: C. REDDIN
Sol No. XXXXXX
Reviewed by: W. SHERMAN
Contr No. XXXXXX
Submitted by: W. SHERMAN STRUCTURAL ENGINEER
File name: XXXXX
Plot date: XXXXXX
Plot scale: XXXXXX

FORT WORTH CENTRAL CITY
PRELIMINARY DESIGN
CLEAR FORK
ISOLATION GATE STRUCTURE
SECTIONS AT ABUTMENTS

SEQUENCE NO.
S-12

Sheet 106 of 139

DESIGN FILE: S-312.DWG

Contr No. S:\2521\42275\STRU\as dwgs\ S-312 12/21/04 12:02 ainzburam XREFS: 2521G-BS

REFERENCE FILE:
REFERENCE FILE:
REFERENCE FILE:

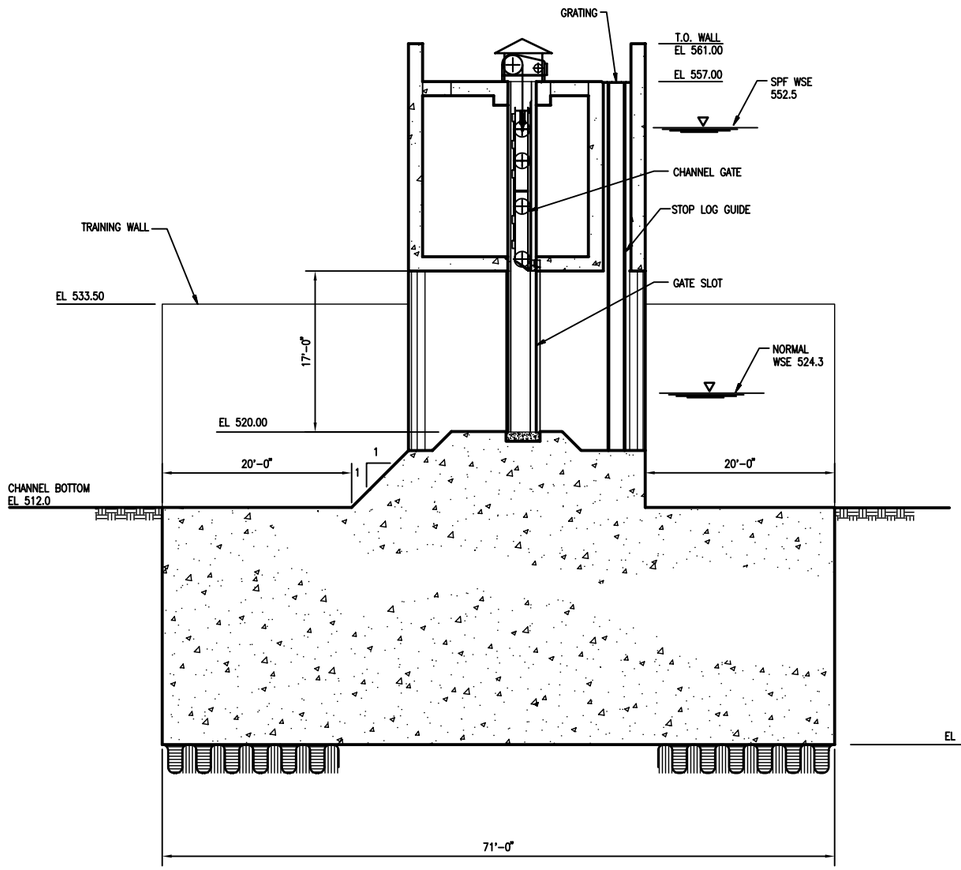


SECTION 1 (S-9)
1/8"=1'-0"

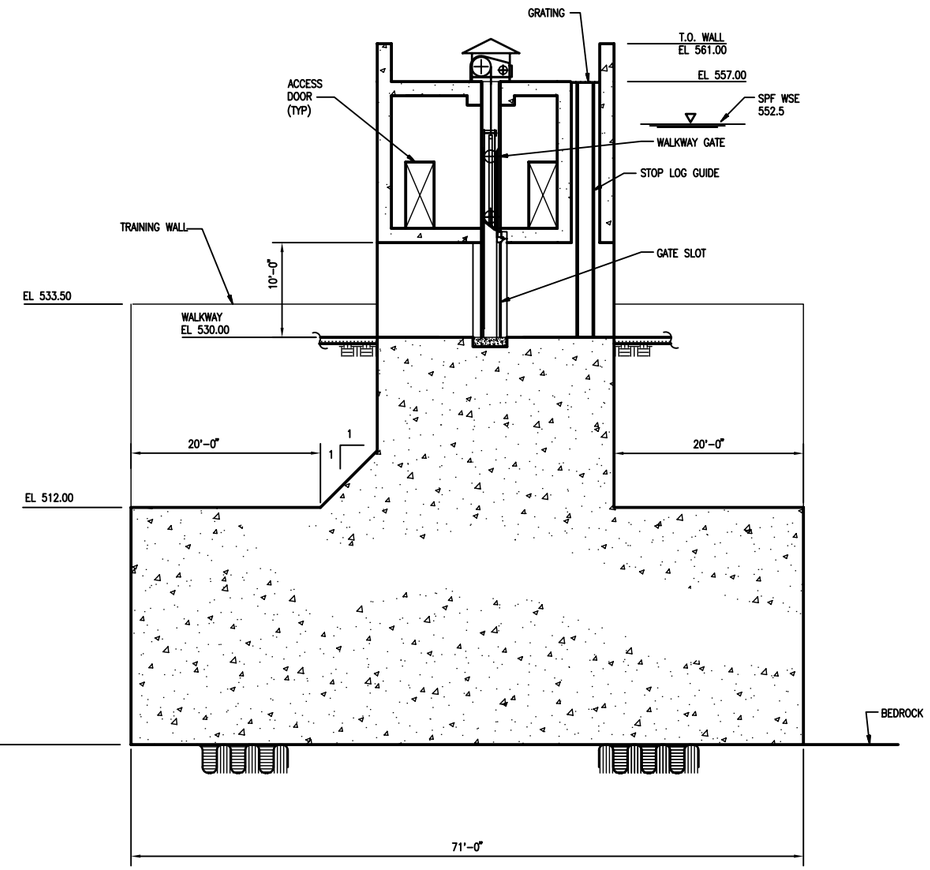


SECTION 2 (S-9)
1/8"=1'-0"

8' 4' 0 8'
SCALE: 1/8 ''= 1'-0"
HALF SIZE PRINT

NOT FOR CONSTRUCTION
THIS DOCUMENT IS RELEASED FOR THE PURPOSE OF INTERIM REVIEW UNDER THE AUTHORITY OF WILLIAM C. SHERMAN TEXAS NO: 68207 ON DATE: 01/05/05 IT IS NOT TO BE USED FOR CONSTRUCTION, BIDDING OR PERMIT PURPOSES.

US Army Corps of Engineers
Fort Worth District

| Symbol | Description | D.O. NO. | Action | Date |
|---|---|---|---|---|
| | | xx | xx | xx |

TARRANT REGIONAL WATER DISTRICT

Designed by: B. ARCHULETTA
Dwn. by: C. REDDIN
Reviewed by: W. SHERMAN
Submitted by: W. SHERMAN STRUCTURAL ENGINEER
Date: JANUARY 2005
Sol No. XXXXXX
Contr No. XXXXXX
File name: XXXXX
Plot date: XXXXXX
Plot scale: XXXXXX

CDM

FORT WORTH CENTRAL CITY PRELIMINARY DESIGN

# CLEAR FORK ISOLATION GATE STRUCTURE ROCK FOUNDATION

SEQUENCE NO.
S-13A
Sheet 107 of 139

DESIGN FILE: S-313A.DWG

S:\2521\42275\STRU\as dwgs\ S-313A 12/21/04 08:17 reddincp XREFS: 2521b-BS

Contr No.

REFERENCE FILE:
REFERENCE FILE:
REFERENCE FILE:

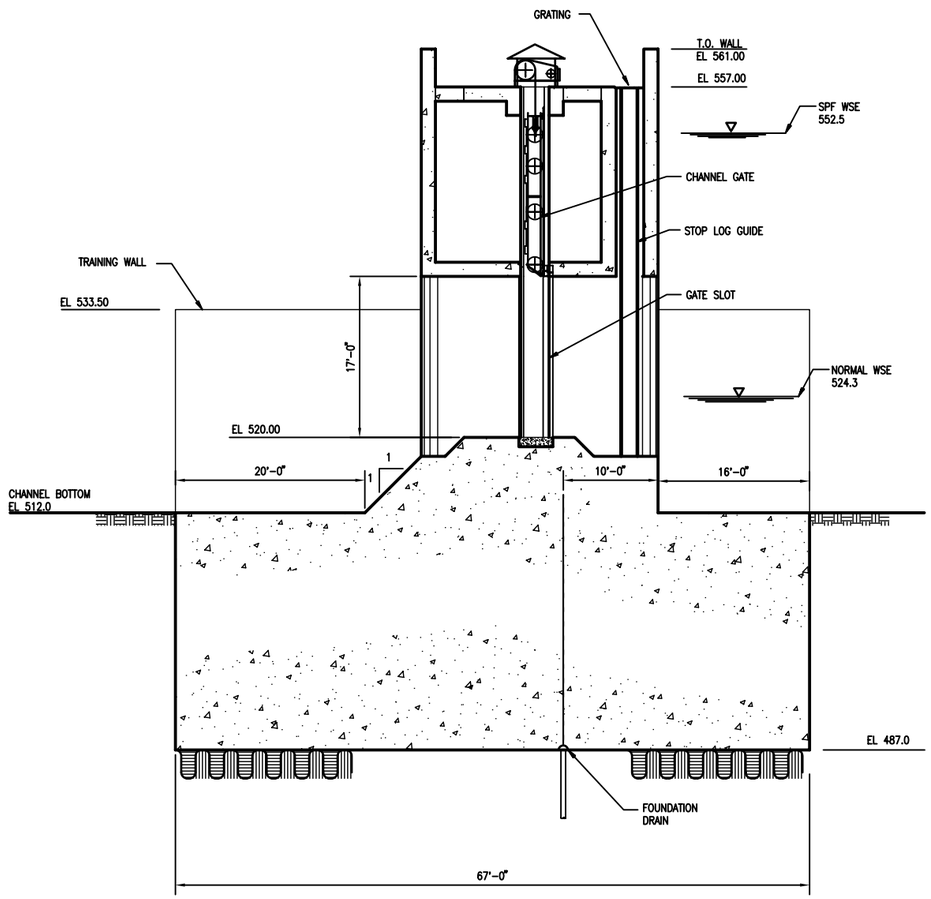


SECTION 1 / S-9
1/8"=1'-0"

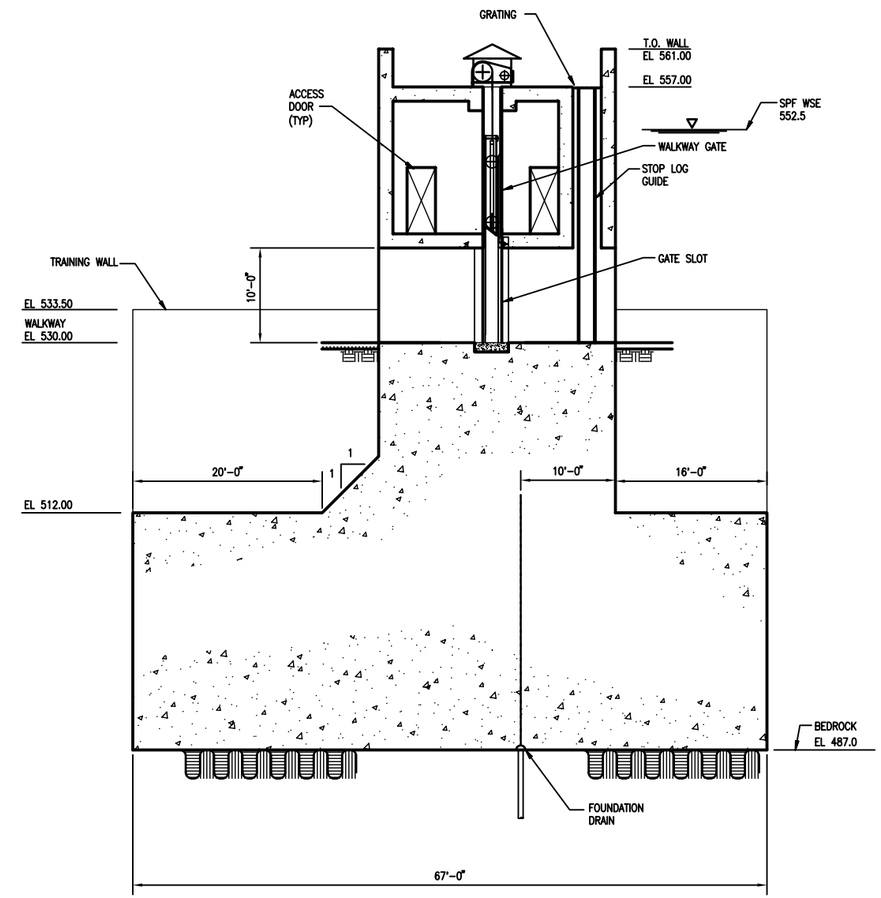


SECTION 2 / S-9
1/8"=1'-0"

8' 4' 0 8'
SCALE: 1/8 ''= 1'-0"
HALF SIZE PRINT

NOT FOR CONSTRUCTION
THIS DOCUMENT IS RELEASED FOR THE PURPOSE OF INTERIM REVIEW UNDER THE AUTHORITY OF WILLIAM C. SHERMAN TEXAS NO: 68207 ON DATE: 01/05/05 IT IS NOT TO BE USED FOR CONSTRUCTION, BIDDING OR PERMIT PURPOSES.

US Army Corps of Engineers
Fort Worth District

| Symbol | Description | D.O. NO. | Action | Date |
|---|---|---|---|---|
| | | | | |

TARRANT REGIONAL WATER DISTRICT

CDM

Designed by: B. ARCHULETTA
Dwn by: C. REDDIN
Reviewed by: W. SHERMAN
Submitted by: W. SHERMAN STRUCTURAL ENGINEER
Date: JANUARY 2005
Sol No. XXXXXX
Contr No. XXXXXX
File name: XXXXX
Plot date: XXXXXX
Plot scale: XXXXXX

DESIGN FILE: S-313B.DWG

FORT WORTH CENTRAL CITY
PRELIMINARY DESIGN

CLEAR FORK
ISOLATION GATE STRUCTURE
WITH FOUNDATION DRAINS

SEQUENCE NO.
S-13B
Sheet 108 of 139

Contr No. S:\2521\42275\STRU\as dwgs\ S-313B 12/20/04 12:56 reddincp XREFS: 2521b-BS

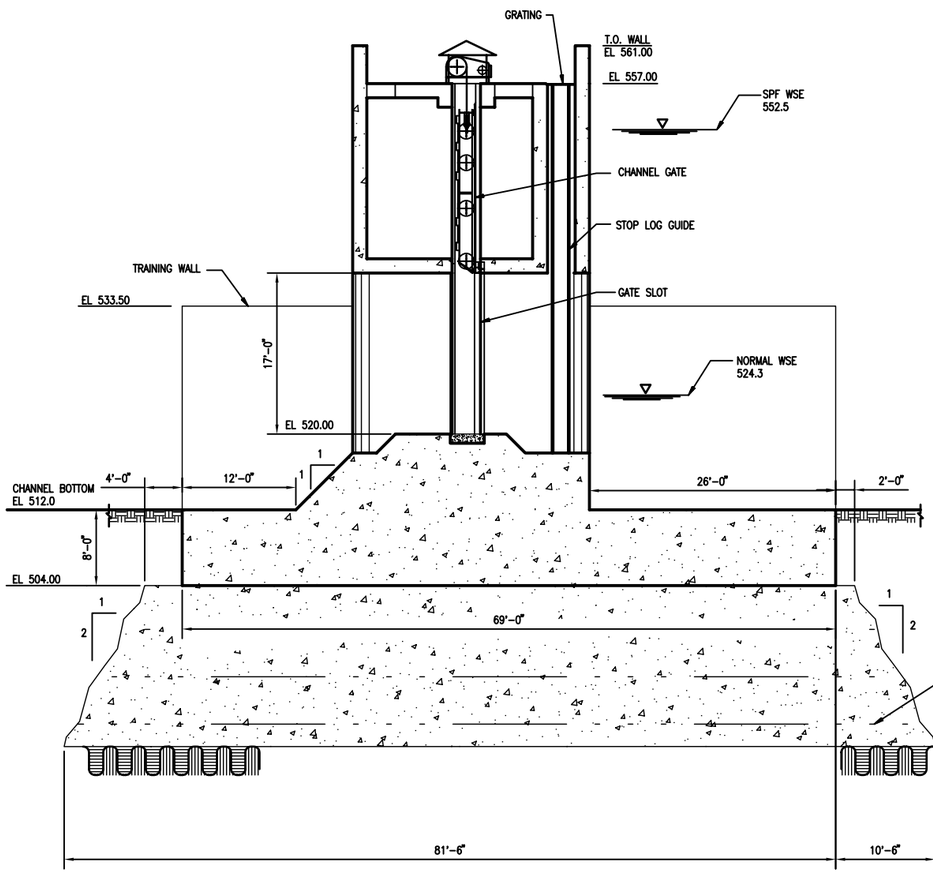


SECTION 1 (S-9)
1/8"=1'-0"

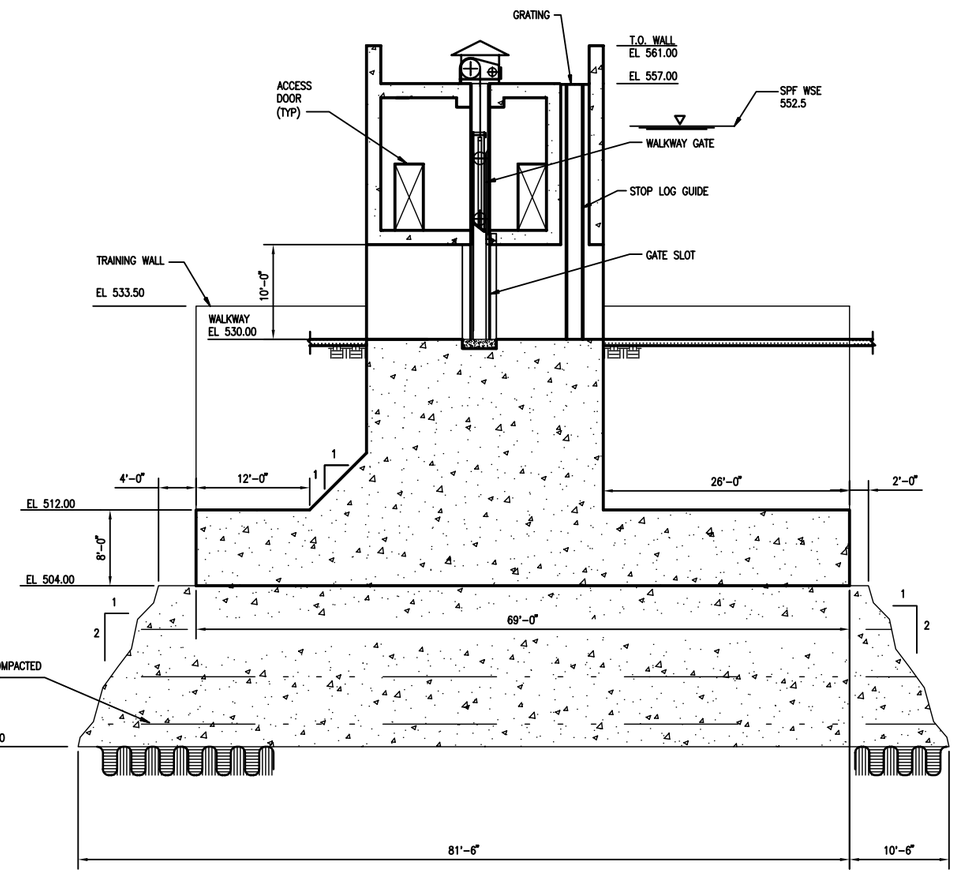


SECTION 2 (S-9)
1/8"=1'-0"

SCALE: 1/8 ''= 1'-0"
HALF SIZE PRINT

NOT FOR CONSTRUCTION
THIS DOCUMENT IS RELEASED FOR THE PURPOSE OF INTERIM REVIEW UNDER THE AUTHORITY OF WILLIAM C. SHERMAN TEXAS NO: 68207 ON DATE: 01/05/05 IT IS NOT TO BE USED FOR CONSTRUCTION, BIDDING OR PERMIT PURPOSES.

US Army Corps of Engineers
Fort Worth District

| Symbol | Description | D.O. NO. | Action | Date |
|---|---|---|---|---|
| | | | | |

TARRANT REGIONAL WATER DISTRICT

Designed by: B. ARCHULETTA
Date: JANUARY 2005
Dwn by: C. REDDIN
Sol No. XXXXXX
Reviewed by: W. SHERMAN
Contr No. XXXXXX
Submitted by: W. SHERMAN STRUCTURAL ENGINEER
File name: XXXXX
Plot date: XXXXX
Plot scale: XXXXXX

CDM

FORT WORTH CENTRAL CITY
PRELIMINARY DESIGN

CLEAR FORK
ISOLATION GATE STRUCTURE
RCC FOUNDATION

SEQUENCE NO.
S-13C
Sheet 109 of 139

DESIGN FILE: S-313C.DWG

Contr No. S:\2521\42275\STRU\as dwgs\ S-313C 12/21/04 08:20 reddincp XREFS: 2521b-BS

REFERENCE FILE:
REFERENCE FILE:
REFERENCE FILE:

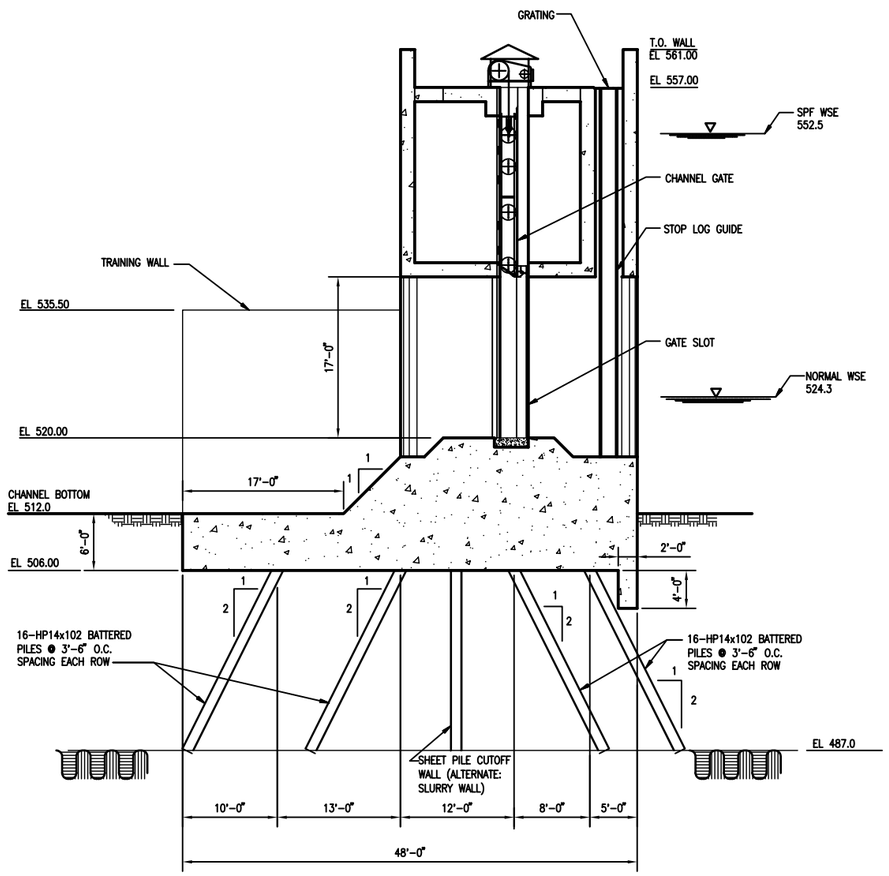


SECTION 1 (S-9)
1/8"=1'-0"

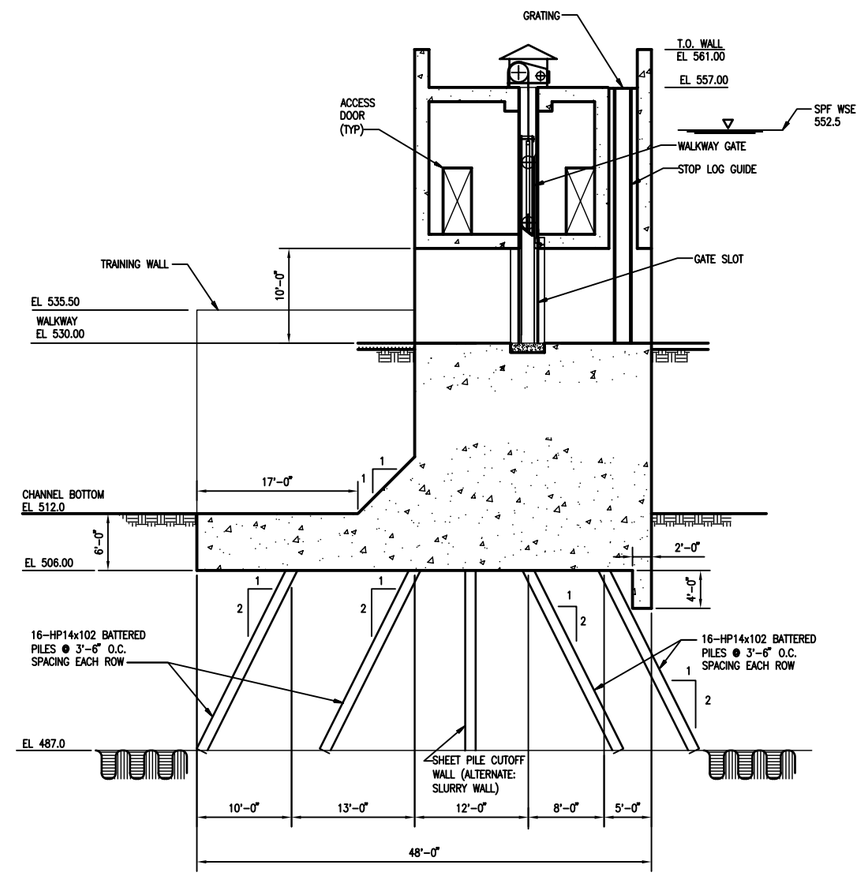


SECTION 2 (S-9)
1/8"=1'-0"

8' 4' 0 8'
SCALE: 1/8 ''= 1'-0"
HALF SIZE PRINT

NOT FOR CONSTRUCTION
THIS DOCUMENT IS RELEASED FOR THE PURPOSE OF INTERIM REVIEW UNDER THE AUTHORITY OF WILLIAM C. SHERMAN TEXAS NO: 68207 ON DATE: 01/05/05 IT IS NOT TO BE USED FOR CONSTRUCTION, BIDDING OR PERMIT PURPOSES.

US Army Corps of Engineers
Fort Worth District

| Symbol | Description | D.O. NO. | Action | Date |
|---|---|---|---|---|
| | | xx | xx | xx |

Date: JANUARY 2005
Sol No. XXXXXX
Contr No. XXXXXX
File name: XXXXX
Plot date: XXXXX
Plot scale: XXXXXX

Designed by: B. ARCHULETTA
Dwn by: C. REDDIN
Reviewed by: W. SHERMAN
Submitted by: W. SHERMAN STRUCTURAL ENGINEER

TARRANT REGIONAL WATER DISTRICT
CDM

FORT WORTH CENTRAL CITY
PRELIMINARY DESIGN

CLEAR FORK
ISOLATION GATE STRUCTURE
PILE FOUNDATION

SEQUENCE NO.
S-13D
Sheet 110 of 139

DESIGN FILE: S-3130.DWG

S:\2521\42275\STRU\as dwgs\ S-313D 12/21/04 11:39 ainzburam XREFS: 2521G-BS

REFERENCE FILE:
REFERENCE FILE:
REFERENCE FILE:

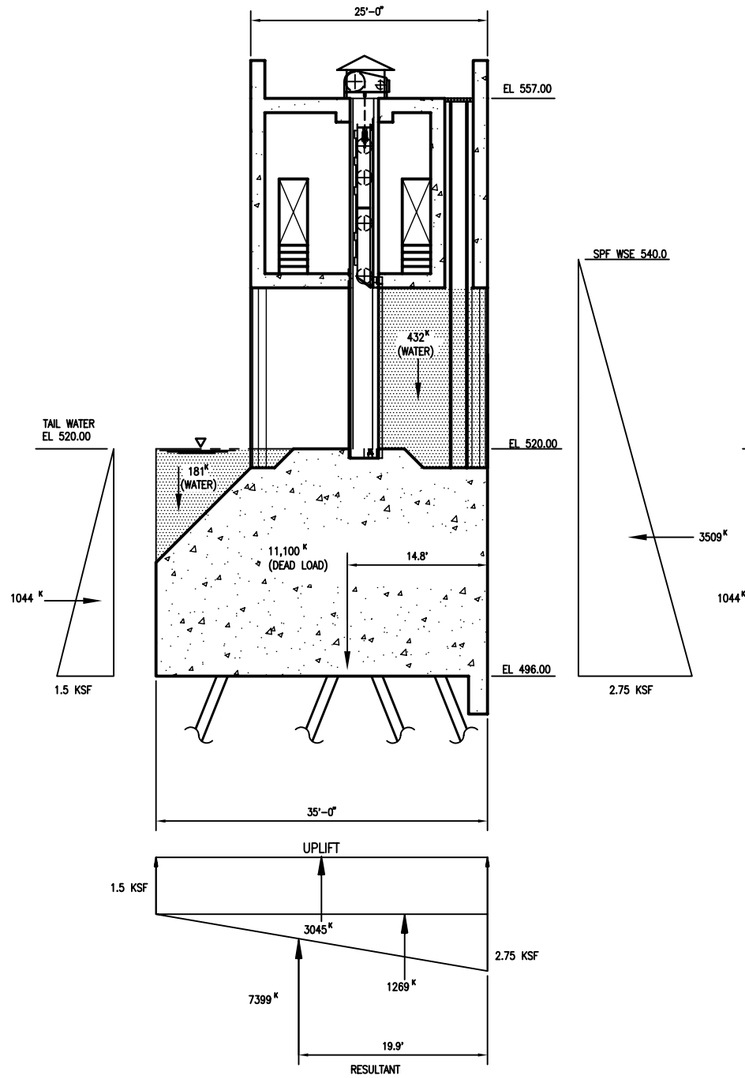


STANDARD PROJECT FLOOD CASE

## STABILITY ANALYSIS

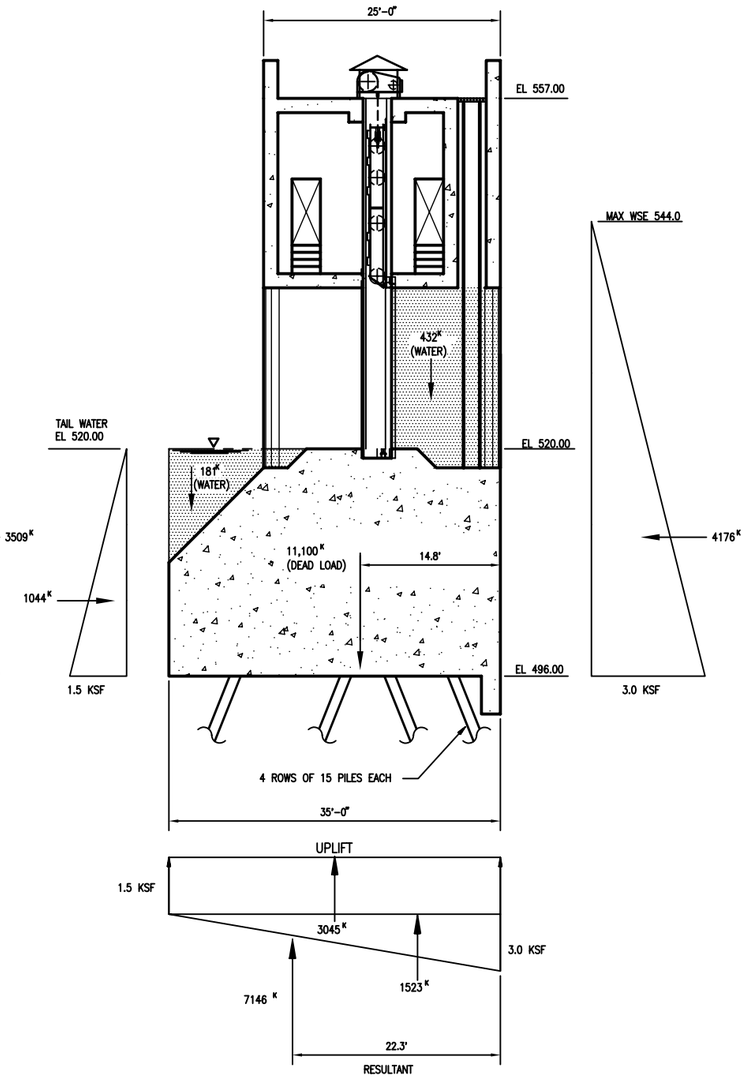


MAXIMUM WATER LEVEL CASE

## STABILITY ANALYSIS

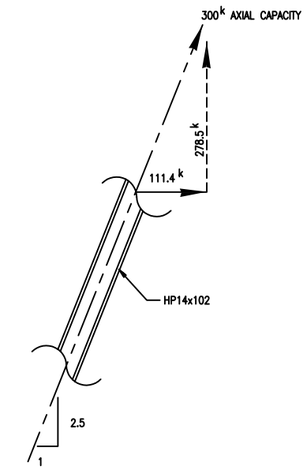


## H-PILE CAPACITY

| TRWD Isolation Gate Structure - Stability Analyses Results (Pile Foundation) | | | |
|---|---|---|---|
| Load Condition | Vertical Load (kips) | Horizontal Load (kips) | Eccentricity (ft) |
| I. Usual Load Condition - SPF | 7,399 | 2,465 | 2.40 |
| II. Unusual Load Condition - Max Water Level | 7,146 | 3,132 | 4.84 |
| III. Extreme Load Condition - Earthquake | 8,351 | 1,038 | -1.31 |
| IV. Unusual Load Condition - Dead Weight | 11,100 | 0 | -2.73 |

Notes:
1. Vertical Pile Capacity = (278.5 k/pile)*(15 piles/row)*(4 rows) = 16,710 kips.
2. Lateral Pile Capacity = (111.4 k/pile)*(15 piles/row)*(2 rows battered upstream) = 3342 kips.
3. Eccentricity is relative to centerline of base (positive downstream).
4. All eccentricities are within the middle third (kern) of the base.
5. Earthquake ground acceleration = 0.05g.
6. Bearing capacity and sliding factor of safety are not reported for foundation on piles.

**Description of Load Conditions:**

I. Usual Load Condition - SPF:
Gates closed; Headwater at Standard Project Flood elevation; Tailwater at gate sill elevation; Uplift on 100% of base.

II. Unusual Load Condition - Max Water Level:
Gates closed; Headwater at top of levee (4-ft above SPF); Tailwater at gate sill elevation; Uplift on 100% of base.

III. Extreme Load Condition - Earthquake:
Gates closed; Headwater at Normal pool elevation; Tailwater at gate sill elevation; Uplift on 100% of base; 0.05g Earthquake acceleration.

IV. Unusual Load Condition - Dead Weight:
Dead weight of structure and gate equipment; No fluid pressures.

8' 4' 0 8'
SCALE: 1/8 ''= 1'-0"
HALF SIZE PRINT

NOT FOR CONSTRUCTION
THIS DOCUMENT IS RELEASED FOR THE PURPOSE OF INTERIM REVIEW UNDER THE AUTHORITY OF WILLIAM C. SHERMAN TEXAS NO: 68207 ON DATE: 01/05/05 IT IS NOT TO BE USED FOR CONSTRUCTION, BIDDING OR PERMIT PURPOSES.

US Army Corps of Engineers
Fort Worth District

| Symbol | Description | D.O. NO. | Action | Date |
|---|---|---|---|---|

Designed by: B. ARCHULETTA
Dwn by: C. REDDIN
Reviewed by: W. SHERMAN
Submitted by: W. SHERMAN STRUCTURAL ENGINEER
Date: JANUARY 2005
Sol No. XXXXXX
Contr No. XXXXXX
File name: XXXXX
Plot date: XXXXX
Plot scale: XXXXXX
DESIGN FILE: S-314.DWG

TARRANT REGIONAL WATER DISTRICT
CDM

FORT WORTH CENTRAL CITY
PRELIMINARY DESIGN
TRWD
ISOLATION GATE STRUCTURES
STABILITY ANALYSES

SEQUENCE NO.
S-14
Sheet 111 of 139

Contr No.
S:\2521\42275\STRU\as dwas\ S-314 01/21/05 12:47 ainzburam XREFS: 2521G-BS

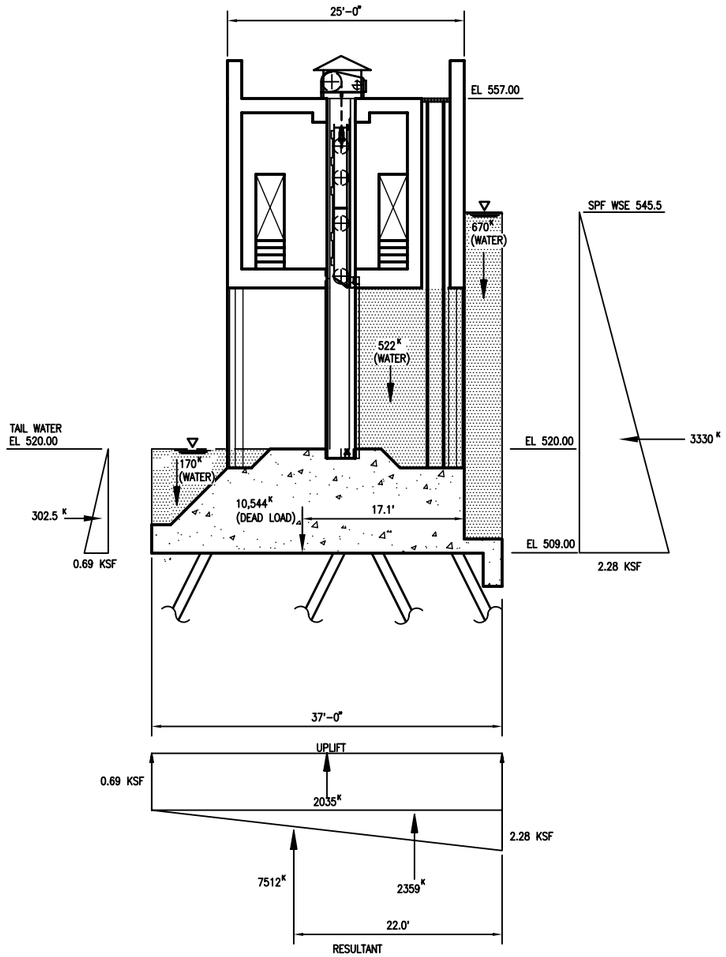


STANDARD PROJECT FLOOD CASE

## STABILITY ANALYSIS

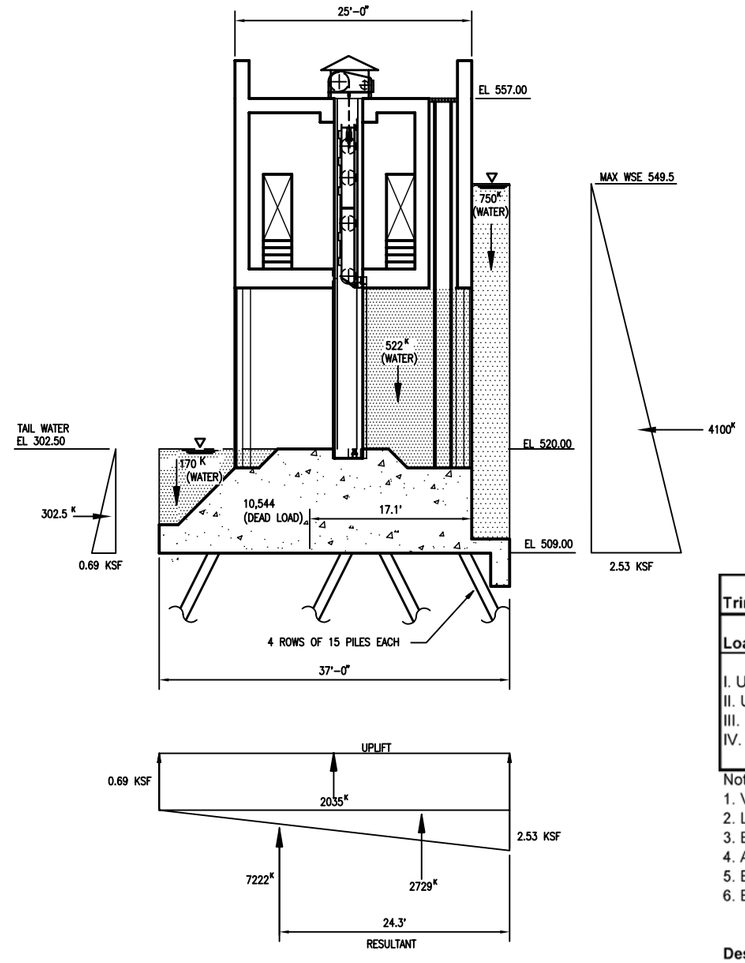


MAXIMUM WATER LEVEL CASE

## STABILITY ANALYSIS

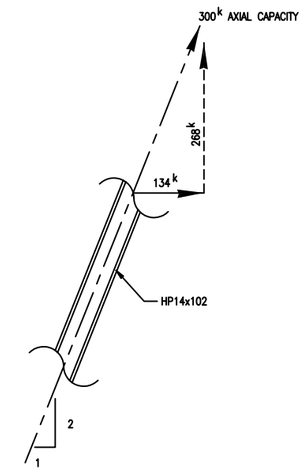


## H-PILE CAPACITY

**Trinity Point Isolation Gate Structure - Stability Analyses Results (Pile Foundation)**

| Load Condition | Vertical Load (kips) | Horizontal Load (kips) | Eccentricity (ft) |
|---|---|---|---|
| I. Usual Load Condition - SPF | 7,512 | 3,028 | 3.45 |
| II. Unusual Load Condition - Max Water Level | 7,222 | 3,798 | 5.77 |
| III. Extreme Load Condition - Earthquake | 8,999 | 856 | -0.69 |
| IV. Unusual Load Condition - Dead Weight | 10,544 | 0 | -1.45 |

Notes:
1. Vertical Pile Capacity = (268 k/pile)*(15 piles/row)*(4 rows) = 16,080 kips.
2. Lateral Pile Capacity = (134 k/pile)*(15 piles/row)*(2 rows battered upstream) = 4020 kips.
3. Eccentricity is relative to centerline of base (positive downstream).
4. All eccentricities are within the middle third (kern) of the base.
5. Earthquake ground acceleration = 0.05g.
6. Bearing capacity and sliding factor of safety are not reported for foundation on piles.

**Description of Load Conditions:**

I. Usual Load Condition - SPF:
Gates closed; Headwater at Standard Project Flood elevation; Tailwater at gate sill elevation; Uplift on 100% of base.

II. Unusual Load Condition - Max Water Level:
Gates closed; Headwater at top of levee (4-ft above SPF); Tailwater at gate sill elevation; Uplift on 100% of base.

III. Extreme Load Condition - Earthquake:
Gates closed; Headwater at Normal pool elevation; Tailwater at gate sill elevation; Uplift on 100% of base; 0.05g Earthquake acceleration.

IV. Unusual Load Condition - Dead Weight:
Dead weight of structure and gate equipment; No fluid pressures.

8' 4' 0 8'
SCALE: 1/8 ''= 1'-0"
HALF SIZE PRINT

NOT FOR CONSTRUCTION
THIS DOCUMENT IS RELEASED FOR THE PURPOSE OF INTERIM REVIEW UNDER THE AUTHORITY OF WILLIAM C. SHERMAN TEXAS NO: 68207 ON DATE: 01/05/05 IT IS NOT TO BE USED FOR CONSTRUCTION, BIDDING OR PERMIT PURPOSES.

US Army Corps of Engineers
Fort Worth District

| Symbol | Description | D.O. NO. | Action | Date |
|---|---|---|---|---|

Designed by: B. ARCHULETTA
Dwn by: C. REDDIN
Reviewed by: W. SHERMAN
Submitted by: W. SHERMAN STRUCTURAL ENGINEER
Date: JANUARY 2005
Sol No. XXXXXX
Contr No. XXXXXX
File name: XXXXX
Plot date: XXXXXX
Plot scale: XXXXXX

TARRANT REGIONAL WATER DISTRICT
CDM

FORT WORTH CENTRAL CITY PRELIMINARY DESIGN
TRINITY POINT ISOLATION GATE STRUCTURES STABILITY ANALYSES

SEQUENCE NO.
S-15
Sheet 112 of 139

DESIGN FILE: S-315.DWG
Contr No. S:\2521\42275\STRU\as dwgs\ S-315 01/21/05 12:59 dinzburam XREFS: 2521G-BS

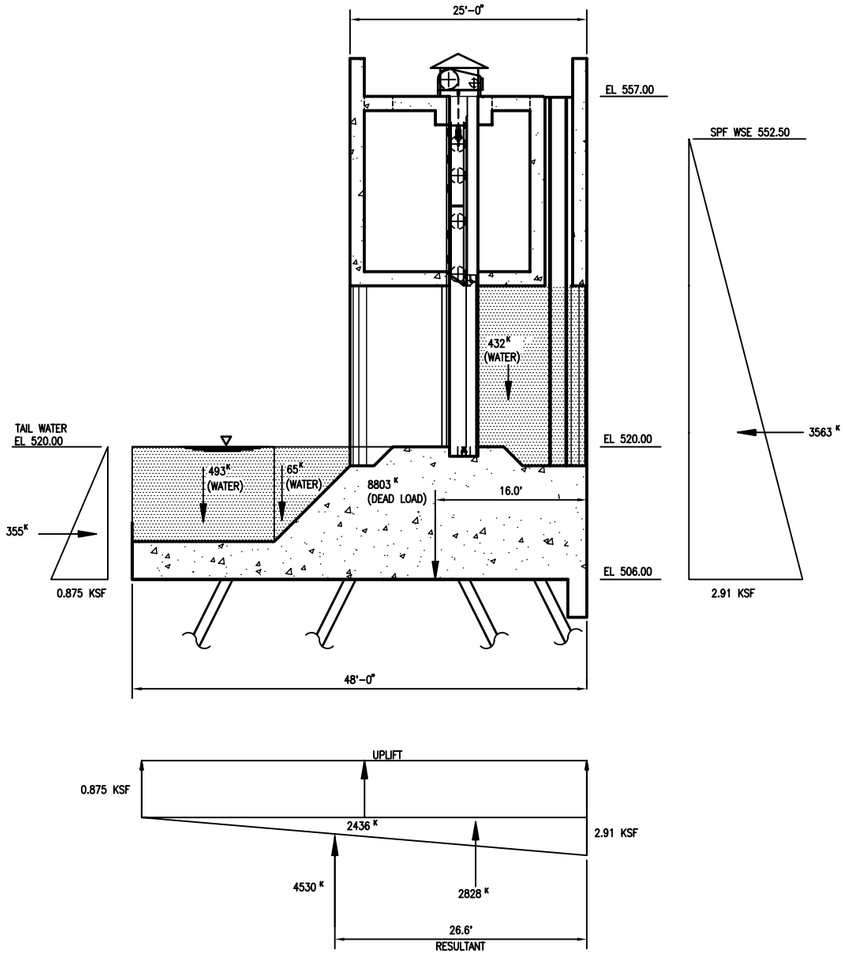


STANDARD PROJECT FLOOD CASE

## STABILITY ANALYSIS

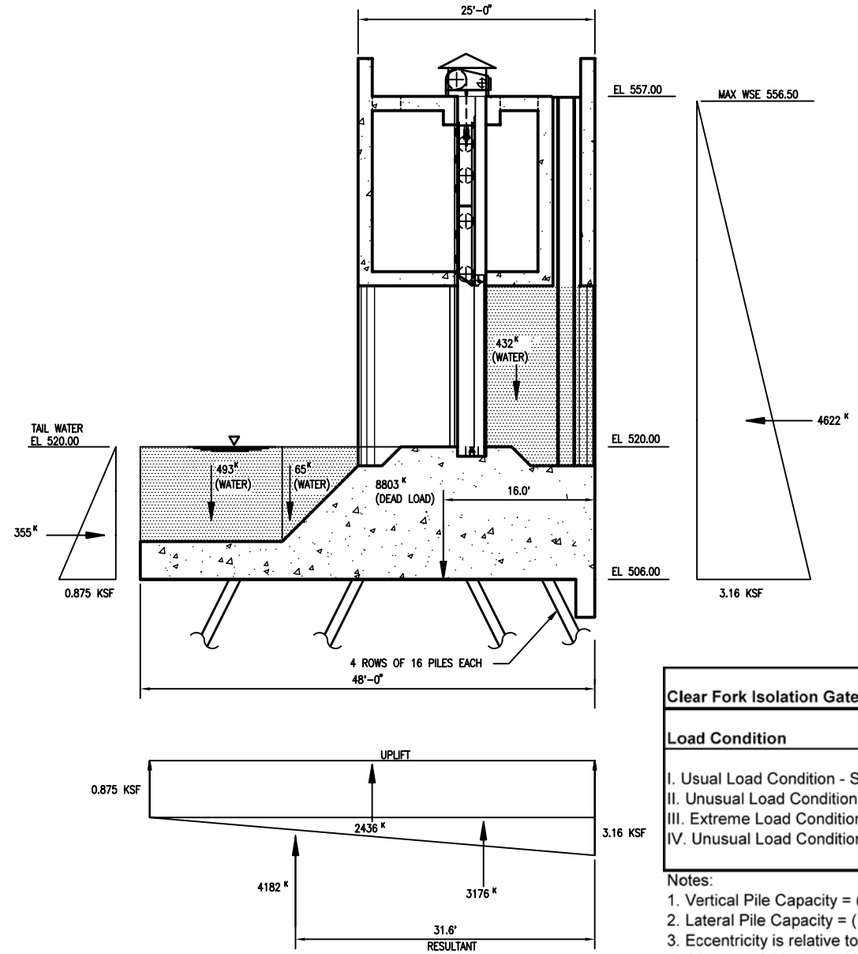


MAXIMUM WATER LEVEL CASE

## STABILITY ANALYSIS

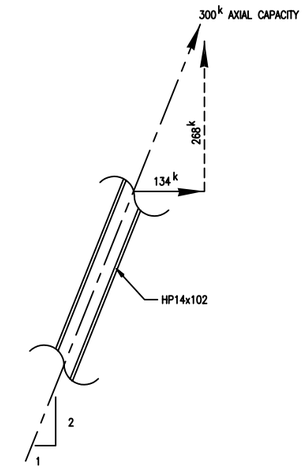


## H-PILE CAPACITY

**Clear Fork Isolation Gate Structure - Stability Analyses Results (Pile Foundation)**

| Load Condition | Vertical Load (kips) | Horizontal Load (kips) | Eccentricity (ft) |
|---|---|---|---|
| I. Usual Load Condition - SPF | 4,530 | 3,564 | 2.60 |
| II. Unusual Load Condition - Max Water Level | 4,182 | 4,267 | 7.56 |
| III. Extreme Load Condition - Earthquake | 6,922 | 696 | -8.08 |
| IV. Unusual Load Condition - Dead Weight | 8,803 | 0 | -7.97 |

Notes:
1. Vertical Pile Capacity = (268 k/pile)*(16 piles/row)*(4 rows) = 17,152 kips.
2. Lateral Pile Capacity = (134 k/pile)*(16 piles/row)*(2 rows battered upstream) = 4288 kips.
3. Eccentricity is relative to centerline of base (positive downstream).
4. All eccentricities are within the middle third (kern) of the base, except earthquake condition.
5. Earthquake ground acceleration = 0.05g.
6. Bearing capacity and sliding factor of safety are not reported for foundation on piles.

**Description of Load Conditions:**

I. Usual Load Condition - SPF:
Gates closed; Headwater at Standard Project Flood elevation; Tailwater at gate sill elevation; Uplift on 100% of base.

II. Unusual Load Condition - Max Water Level:
Gates closed; Headwater at top of levee (4-ft above SPF); Tailwater at gate sill elevation; Uplift on 100% of base.

III. Extreme Load Condition - Earthquake:
Gates closed; Headwater at Normal pool elevation; Tailwater at gate sill elevation; Uplift on 100% of base; 0.05g Earthquake acceleration.

IV. Unusual Load Condition - Dead Weight:
Dead weight of structure and gate equipment; No fluid pressures.

8' 4' 0 8'
SCALE: 1/8 ''= 1'-0"
HALF SIZE PRINT

NOT FOR CONSTRUCTION
THIS DOCUMENT IS RELEASED FOR THE PURPOSE OF INTERIM REVIEW UNDER THE AUTHORITY OF WILLIAM C. SHERMAN TEXAS NO: 68207 ON DATE: 01/05/05 IT IS NOT TO BE USED FOR CONSTRUCTION, BIDDING OR PERMIT PURPOSES.

US Army Corps of Engineers
Fort Worth District

| Symbol | Description | D.O. No. | Action | Date |
|---|---|---|---|---|

TARRANT REGIONAL WATER DISTRICT

Designed by: B. ARCHULETTA
Dwn by: C. REDDIN
Reviewed by: W. SHERMAN
Submitted by: W. SHERMAN STRUCTURAL ENGINEER
Date: JANUARY 2005
Sol No. XXXXXX
Contr No. XXXXXX
File name: XXXXX
Plot date: XXXXXX
Plot scale: XXXXXX

CDM

FORT WORTH CENTRAL CITY PRELIMINARY DESIGN
CLEAR FORK ISOLATION GATE STRUCTURES STABILITY ANALYSES

SEQUENCE NO.
S-16
Sheet 113 of 139

DESIGN FILE: S-316.DWG

S:\2521\42275\STRU\as dwgs\ S-316 01/05/05 15:16 ainzburam XREFS: 2521G-BS

Contr No.

REFERENCE FILE:
REFERENCE FILE:
REFERENCE FILE:

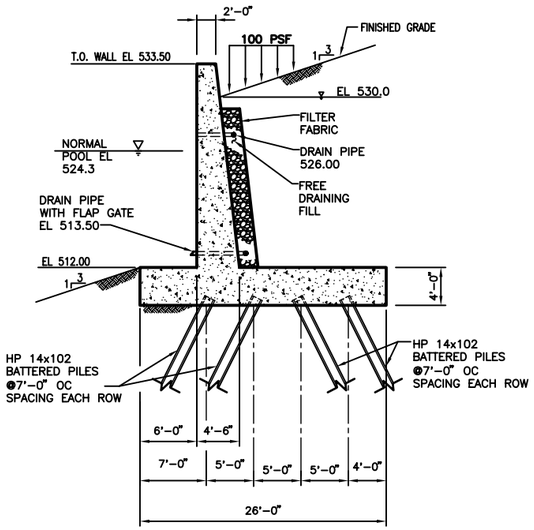


TRAINING WALL
**DETAIL**
1/8" = 1'-0"

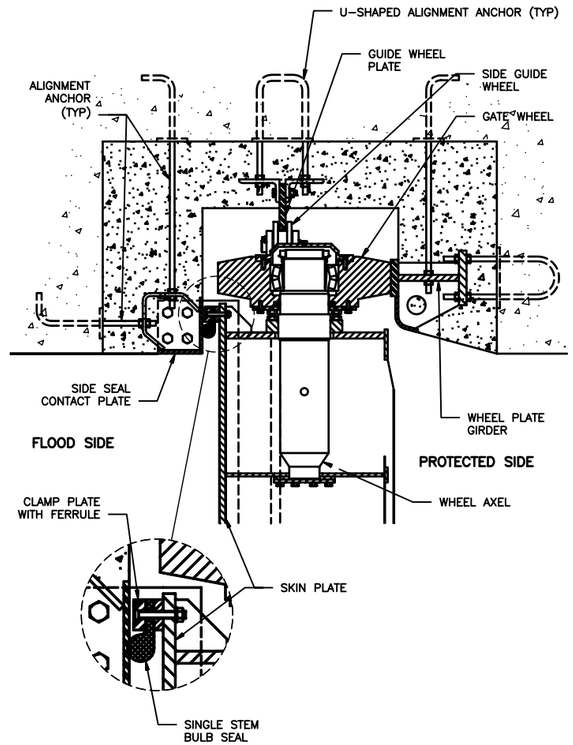


GATE SLOT, WHEEL
GUIDE AND SIDE SEAL DETAILS
**DETAIL**
NTS

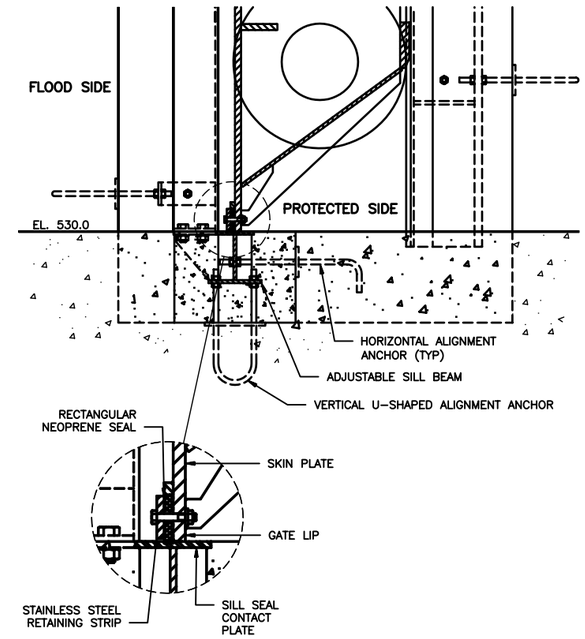


SILL SEAL
**DETAIL**
NTS

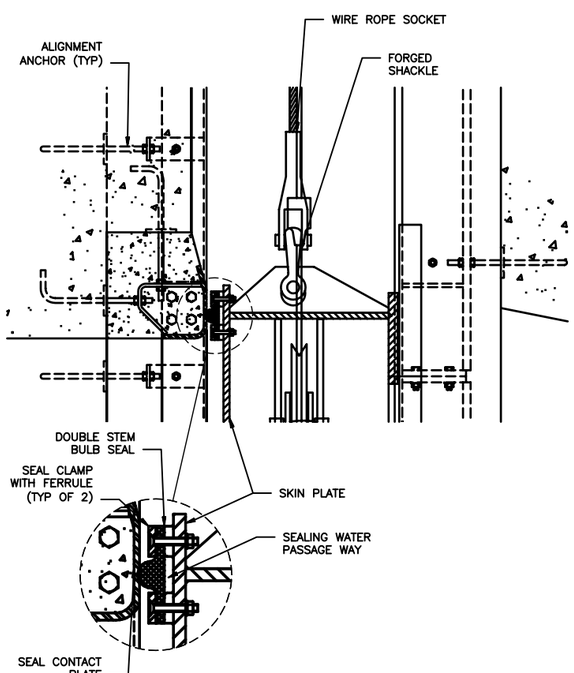


LINTEL SEAL
**DETAIL**
NTS

8' 4' 0 8'
SCALE: 1/8 ''= 1'-0"
HALF SIZE PRINT

NOT FOR CONSTRUCTION
THIS DOCUMENT IS RELEASED FOR THE PURPOSE OF INTERIM REVIEW UNDER THE AUTHORITY OF WILLIAM C. SHERMAN TEXAS NO: 68207 ON DATE: 01/05/05 IT IS NOT TO BE USED FOR CONSTRUCTION, BIDDING OR PERMIT PURPOSES.

US Army Corps of Engineers
Fort Worth District

| Symbol | Description | D.O. No. | Action | Date |
|---|---|---|---|---|
| | | xx | xx | xx |

TARRANT REGIONAL WATER DISTRICT

Designed by: M. OLESON
Dwn by: B. LATHAM
Reviewed by: D. FUNDERLIC
Submitted by:
Date: JANUARY 2005
Sol No. XXXXXX
Contr No. XXXXXX
File name: XXXXX
Plot date: XXXXXX
Plot scale: XXXXXX

CDM

FORT WORTH CENTRAL CITY PRELIMINARY DESIGN

**ISOLATION GATE STRUCTURE DETAILS**

SEQUENCE NO.
S-17
Sheet 114 of 139

DESIGN FILE: S-517.DWG

REFERENCE FILE:
REFERENCE FILE:
REFERENCE FILE:

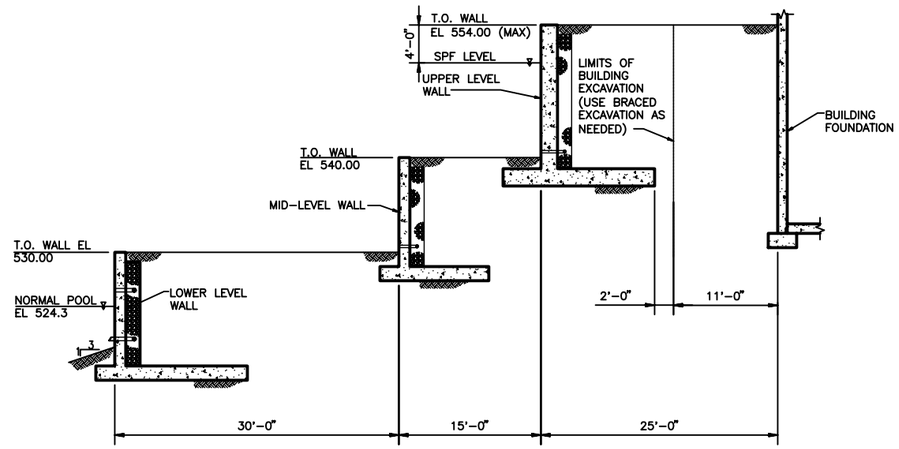


LOOKING NORTH – BYPASS CHANNEL
WITH TALL UPPER WALL

**ELEVATION**

1/8" = 1'-0"

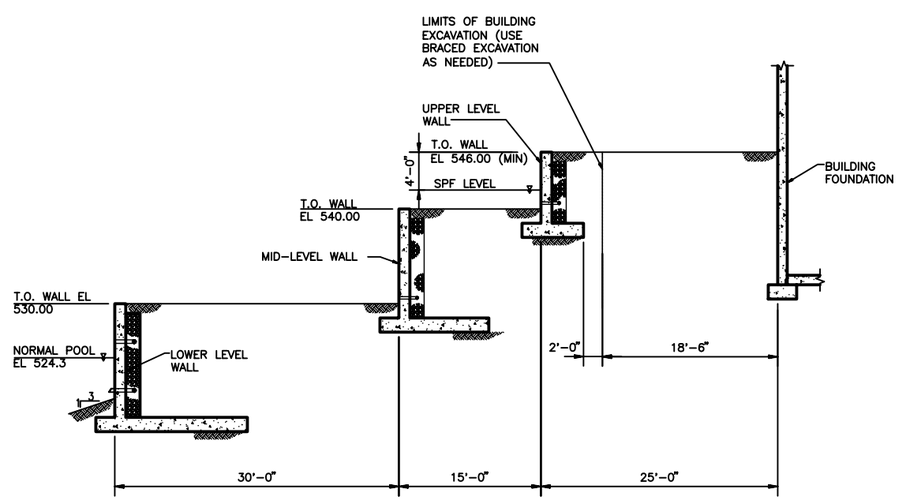


LOOKING NORTH – BYPASS CHANNEL
WITH SHORT UPPER WALL

**ELEVATION**

1/8" = 1'-0"

8' 4' 0 8'

SCALE: 1/8 ''= 1'-0"

HALF SIZE PRINT

NOT FOR CONSTRUCTION

THIS DOCUMENT IS RELEASED FOR THE PURPOSE OF INTERIM REVIEW UNDER THE AUTHORITY OF WILLIAM C. SHERMAN TEXAS NO: 68207 ON DATE: 01/05/05 IT IS NOT TO BE USED FOR CONSTRUCTION, BIDDING OR PERMIT PURPOSES.

US Army Corps of Engineers
Fort Worth District

| Symbol | Description | D.O. NO. | Action | Date |
|---|---|---|---|---|
| | | | | |

Date: JANUARY 2005
Sol No. XXXXXX
Contr No. XXXXXX
File name: XXXXX
Plot date: XXXXXX
Plot scale: XXXXXX

Designed by: B. ARCHULETTA
Dwn by: M. GINZBURG
Reviewed by: W. SHERMAN
Submitted by: W. SHERMAN STRUCTURAL ENGINEER

TARRANT REGIONAL WATER DISTRICT

CDM

FORT WORTH CENTRAL CITY
PRELIMINARY DESIGN

**BYPASS CHANNEL RETAINING WALLS**

**SEQUENCE NO.**

SB-1

Sheet 115 of 139

DESIGN FILE: SB-1.DWG

S:\2521\42275\$TRU\gs_dwgs\ SB-1 01/24/05 11:35 reddincp XREFS: 2521G1BS

Contr No.

REFERENCE FILE:
REFERENCE FILE:
REFERENCE FILE:

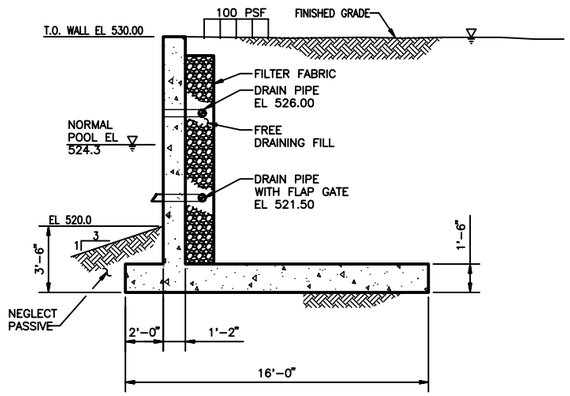


LOWER LEVEL WALL – NORMAL LOADING CONDITION
(REQUIRED FACTOR OF SAFETY = 1.50)

**ELEVATION**
1/4" = 1'-0"

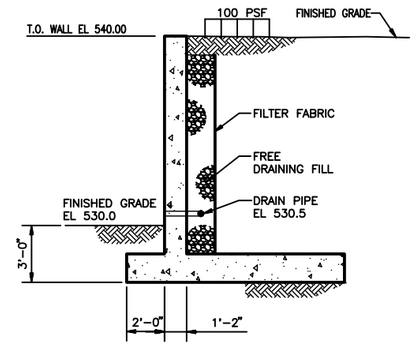


MID-LEVEL WALL – NORMAL LOADING CONDITION
(REQUIRED FACTOR OF SAFETY = 1.50)

**ELEVATION**
1/4" = 1'-0"

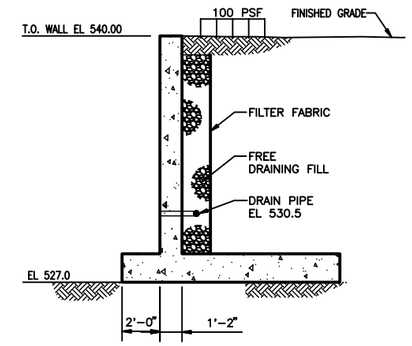


MID-LEVEL WALL – CONSTRUCTION LOADING CONDITION
(REQUIRED FACTOR OF SAFETY = 1.33)

**ELEVATION**
1/4" = 1'-0"

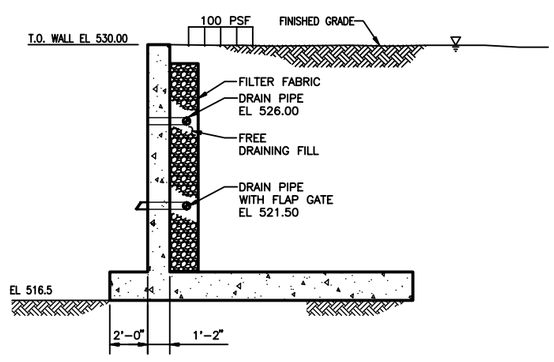


LOWER LEVEL WALL –
CONSTRUCTION/MAINTENANCE LOADING CONDITION
(REQUIRED FACTOR OF SAFETY = 1.33)

**ELEVATION**
1/4" = 1'-0"

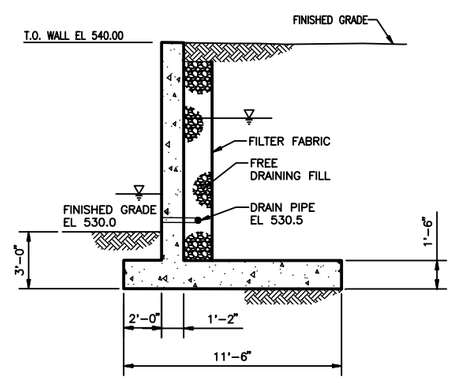


MID-LEVEL WALL – FLOOD/DRAWDOWN LOADING CONDITION
(REQUIRED FACTOR OF SAFETY = 1.50)

**ELEVATION**
1/4" = 1'-0"

LOOKING NORTH – BYPASS CHANNEL
WITH TALL UPPER WALL

**ELEVATION**

4' 2' 0 4'
SCALE: 1/4" = 1'-0"
HALF SIZE PRINT

NOT FOR CONSTRUCTION
THIS DOCUMENT IS RELEASED FOR THE PURPOSE OF INTERIM REVIEW UNDER THE AUTHORITY OF WILLIAM C. SHERMAN TEXAS NO: 68207 ON DATE: 01/05/05 IT IS NOT TO BE USED FOR CONSTRUCTION, BIDDING OR PERMIT PURPOSES.

US Army Corps of Engineers
Fort Worth District

| Symbol | Description | D.O. NO. | Action | Date |
|---|---|---|---|---|
| | | xx | xx | xx |

TARRANT REGIONAL WATER DISTRICT

CDM

Designed by: Name B. ARCHULETTA
Date: JANUARY 2005
Dwn by: Name M. GINZBURG
Sol No. XXXXXX
Reviewed by: Name W. SHERMAN
Contr No. XXXXXX
Submitted by: NAME W. SHERMAN TITLE STRUCTURAL ENGINEER
File name: XXXXX
Plot date: XXXXX
Plot scale: XXXXXX

FORT WORTH CENTRAL CITY PRELIMINARY DESIGN

**LOWER AND MID-LEVEL RETAINING WALLS LOADING CONDITIONS**

SEQUENCE NO.
SB-2
Sheet 116 of 139

DESIGN FILE: SB-2.DWG

Contr: S:\2521\42275\STRU\as dwgs\ SB-2 01/24/05 11:31 reddincp XREFS: 2521G-BS

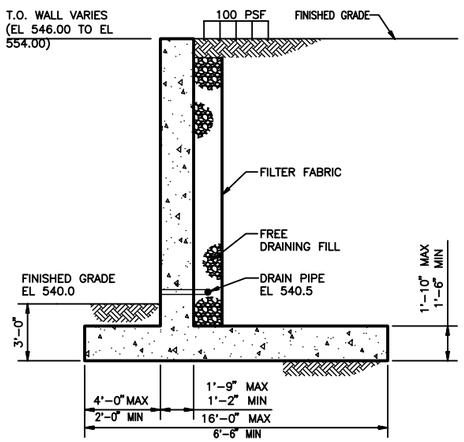


UPPER LEVEL WALL – NORMAL LOADING CONDITION
(REQUIRED FACTOR OF SAFETY = 1.50)

**ELEVATION**
1/4" = 1'-0"

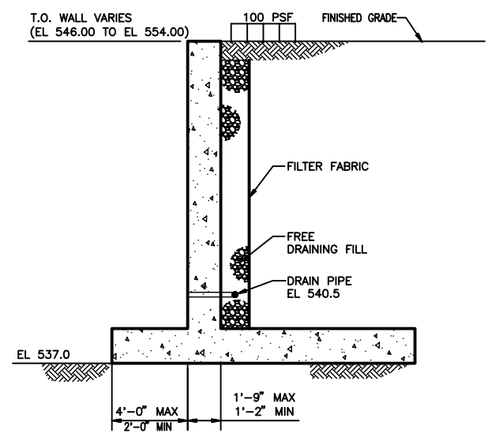


UPPER LEVEL WALL – CONSTRUCTION LOADING CONDITION
(REQUIRED FACTOR OF SAFETY = 1.33)

**ELEVATION**
1/4" = 1'-0"

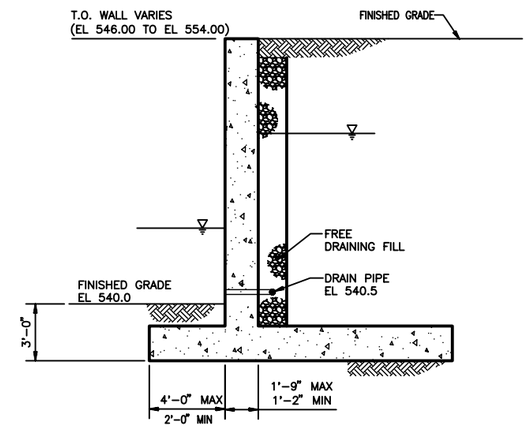


UPPER LEVEL WALL – FLOOD/DRAWDOWN LOADING CONDITION
(REQUIRED FACTOR OF SAFETY = 1.50)

**ELEVATION**
1/4" = 1'-0"

4' 2' 0 4'
SCALE: 1/4" = 1'-0"
HALF SIZE PRINT

NOT FOR CONSTRUCTION
THIS DOCUMENT IS RELEASED FOR THE PURPOSE OF INTERIM REVIEW UNDER THE AUTHORITY OF WILLIAM C. SHERMAN TEXAS NO: 68207 ON DATE: 01/05/05 IT IS NOT TO BE USED FOR CONSTRUCTION, BIDDING OR PERMIT PURPOSES.

US Army Corps of Engineers
Fort Worth District

| Symbol | Description | D.O. NO. | Action | Date |
|---|---|---|---|---|
| | | | | |

TARRANT REGIONAL WATER DISTRICT

CDM

Designed by: Name B. ARCHULETTA
Dwn by: Name M. GINZBURG
Reviewed by: Name W. SHERMAN
Submitted by: NAME W. SHERMAN TITLE STRUCTURAL ENGINEER
Date: JANUARY 2005
Sol No. XXXXXX
Contr No. XXXXXX
File name: XXXXX
Plot date: XXXXXX
Plot scale: XXXXXX

FORT WORTH CENTRAL CITY PRELIMINARY DESIGN

**UPPER LEVEL RETAINING WALLS LOADING CONDITIONS**

SEQUENCE NO.
SB-3
Sheet 117 of 139

DESIGN FILE: SB-3.DWG

REFERENCE FILE: XX
REFERENCE FILE: XX
REFERENCE FILE: XX

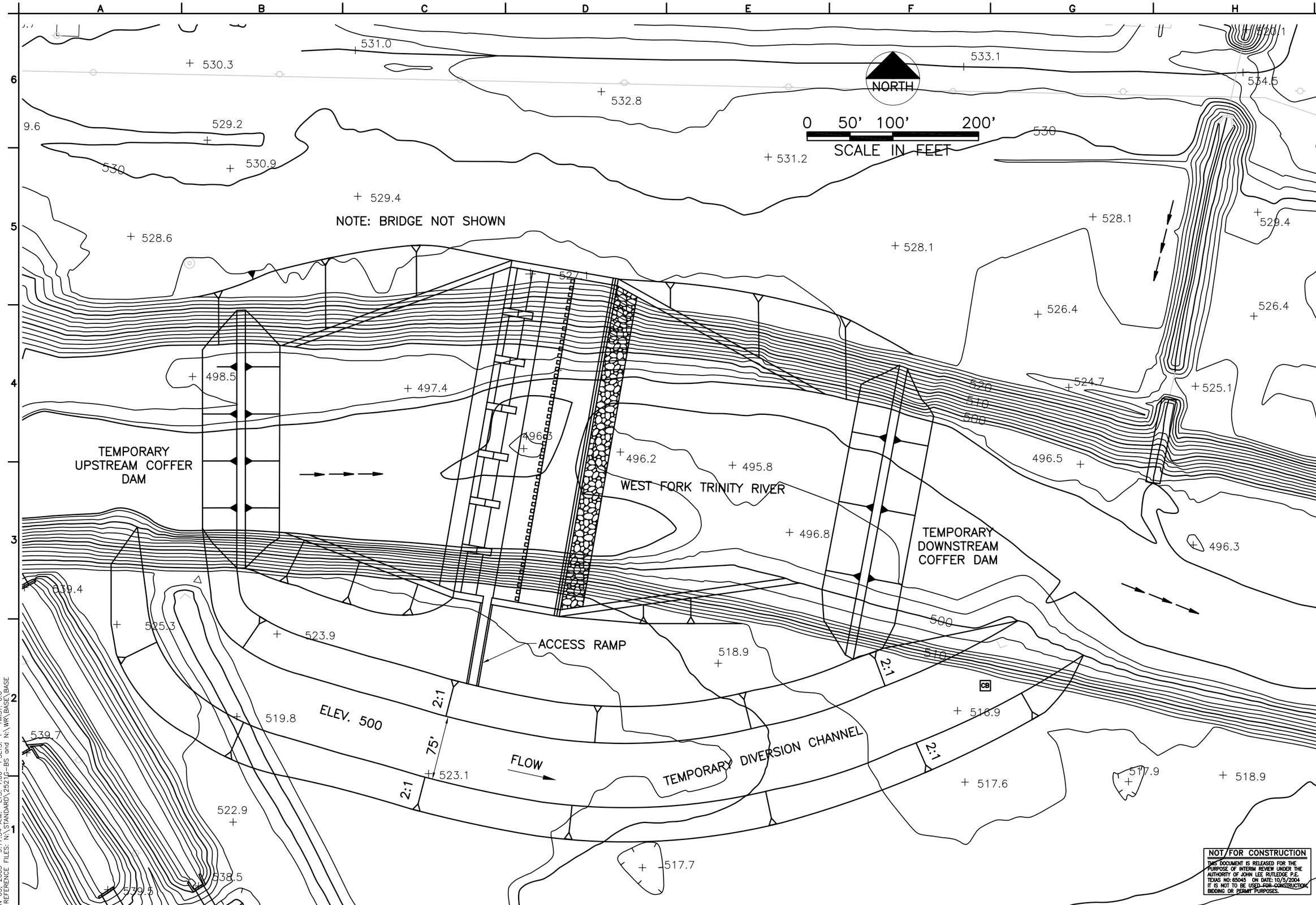


US Army Corps of Engineers
Fort Worth District

| Symbol | Description | D.O. NO. | Action | Date |
|---|---|---|---|---|

Date: JANUARY 2005
Sol No.
Contr. No. CDM04188
File name:
Plot date: OCT. 2004
Plot scale: AS SHOWN

Designed by: JLR
Dwn by: CAM
Reviewed by: JLR
Submitted by:
NAME
TITLE

TARRANT REGIONAL WATER DISTRICT

CDM

FORT WORTH CENTRAL CITY
PRELIMINARY DESIGN

**SAMUELS AVENUE DAM**

**GRADING PLAN WITH DIVERSION**

**NOT FOR CONSTRUCTION**

THIS DOCUMENT IS RELEASED FOR THE PURPOSE OF INTERIM REVIEW UNDER THE AUTHORITY OF JOHN LEE RUTLEDGE P.E. TEXAS NO: 65045 ON DATE: 10/5/2004
IT IS NOT TO BE USED FOR CONSTRUCTION, BIDDING OR PERMIT PURPOSES.

SEQUENCE NO.
SS-1



DESIGN FILE: CV-ALL-PL-OVRL

Contr No.

ACAD Rel 16.1s (LMS Tech) User: CAM
[CDM04188]N:\WR\REPORT\CV-ALL-PL-OVRL.DWG LAYOUT: Layout1
JAN 05, 2005 9:17:34 A.M. LTS: 1.00 PSLTS: 1 TWIST: 0.0
2 REFERENCE FILES: N:\STANDARD\252P-BS and N:\WR\BASE\BASE

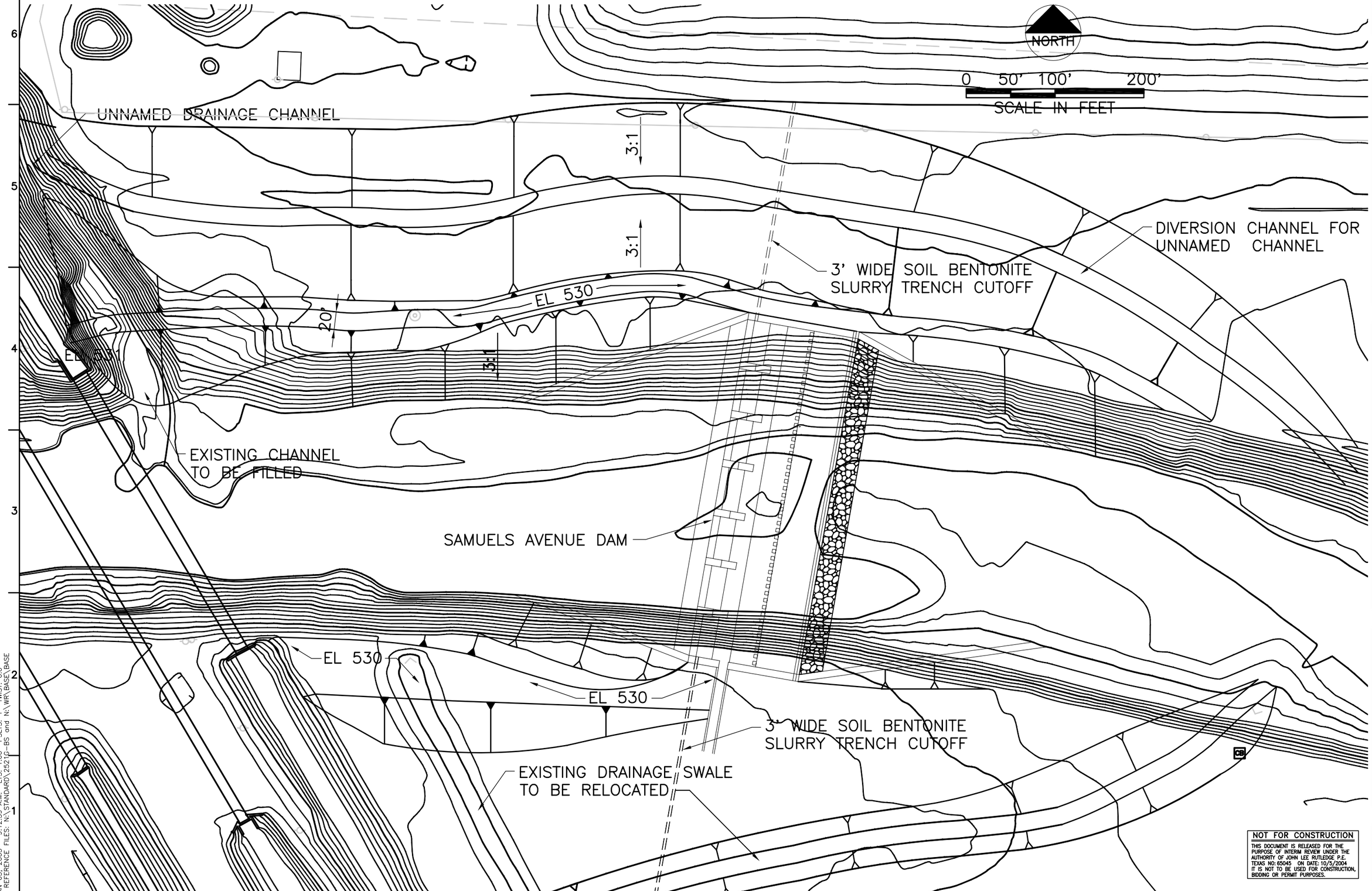


US Army Corps of Engineers
Fort Worth District

| Symbol | Description | D.O. NO. | Action | Date |
|---|---|---|---|---|

TARRANT REGIONAL WATER DISTRICT

CDM

Designed by: JLR
Dwn by: CAM
Reviewed by: JLR
Submitted by: NAME TITLE

Date: JANUARY 2005
Sol No.
Contr. No. CDM04188
File name:
Plot date: OCT. 2004
Plot scale: AS SHOWN

DESIGN FILE: C-CTxx02

FORT WORTH CENTRAL CITY PRELIMINARY DESIGN

# SAMUELS AVENUE DAM

## FINAL GRADING PLAN

**NOT FOR CONSTRUCTION**

THIS DOCUMENT IS RELEASED FOR THE PURPOSE OF INTERIM REVIEW UNDER THE AUTHORITY OF JOHN LEE RUTLEDGE P.E. TEXAS NO: 85045 ON DATE: 10/5/2004 IT IS NOT TO BE USED FOR CONSTRUCTION, BIDDING OR PERMIT PURPOSES.

SEQUENCE NO.

SS-2

Sheet 119 of 139

Contr No.

ACAD Rel 16.1s (LMS Tech) User: CAM
[CDM04188]N:\WR\REPORT\C-CTXX02.DWG LAYOUT: Layout1
JAN 05, 2005 9:12:59 A.M. LTS: 1.00 PSLTS: 1 TWIST: 0.0
2 REFERENCE FILES: N:\STANDARD\2521G-BS and N:\WR\BASE\BASE

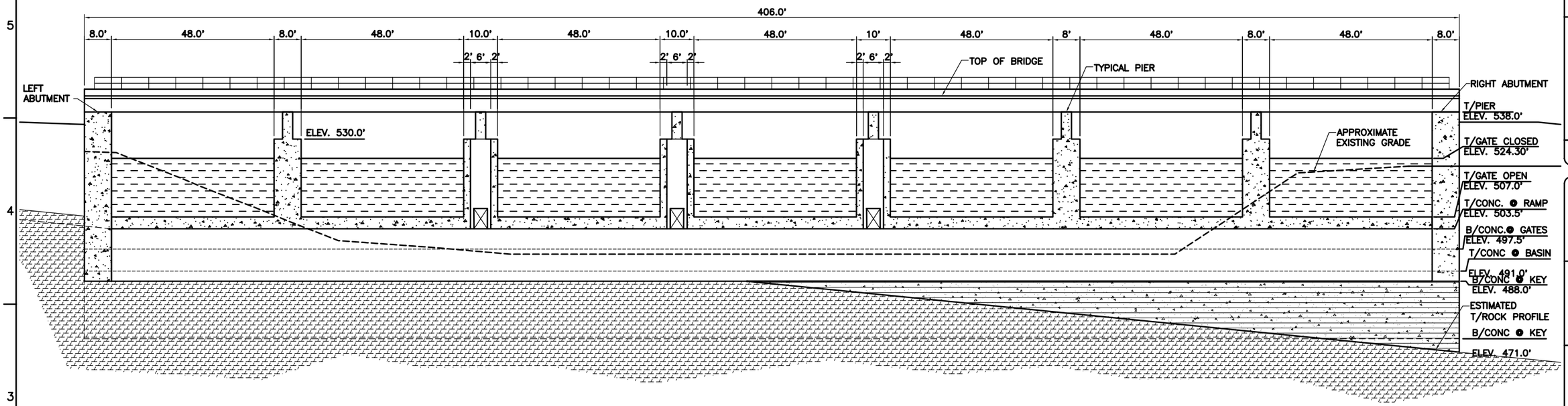


1 — 1"=30'

# SAMUELS AVENUE DAM UPSTREAM ELEVATION

**NOT FOR CONSTRUCTION**

THIS DOCUMENT IS RELEASED FOR THE PURPOSE OF INTERIM REVIEW UNDER THE AUTHORITY OF JOHN LEE RUTLEDGE P.E. TEXAS NO: 65045 ON DATE: 10/5/2004 IT IS NOT TO BE USED FOR CONSTRUCTION, BIDDING OR PERMIT PURPOSES.

US Army Corps of Engineers
Fort Worth District

| Symbol | Description | D.O. NO. | Action | Date |
|---|---|---|---|---|

Date: JANUARY 2005
Sol No.
Contr No. CDM04188
File name:
Plot date: OCT. 2004
Plot scale: AS SHOWN

Designed by: JLR
Dwn by: CAM
Reviewed by: JLR
Submitted by: NAME TITLE

TARRANT REGIONAL WATER DISTRICT

CDM

FORT WORTH CENTRAL CITY PRELIMINARY DESIGN
SAMUELS AVENUE DAM
ELEVATION VIEW OF DAM

SEQUENCE NO.
SS-3
Sheet 120 of 139

DESIGN FILE: CV-DAM-EL-GATE

Contr No.

ACAD Rel 16.1s (LMS Tech) User: CAM
[CDM04188]N:\WR\REPORT\CV-DAM-EL-GATE.DWG LAYOUT: Channel section
JAN 06, 2005 1:37:35 P.M. LTS: 0.50 PSLTS: 1 TWIST: 0.0
REFERENCE FILE: N:\STANDARD\25216-BS

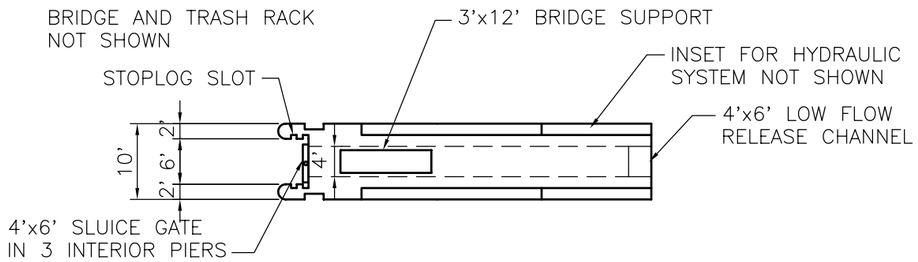


## PLAN OF LOW FLOW PIER

1"=20'

NOTE:
STOP LOGS TO BE STORED ON UPSTREAM SIDE OF BRIDGE. NOT SHOWN.

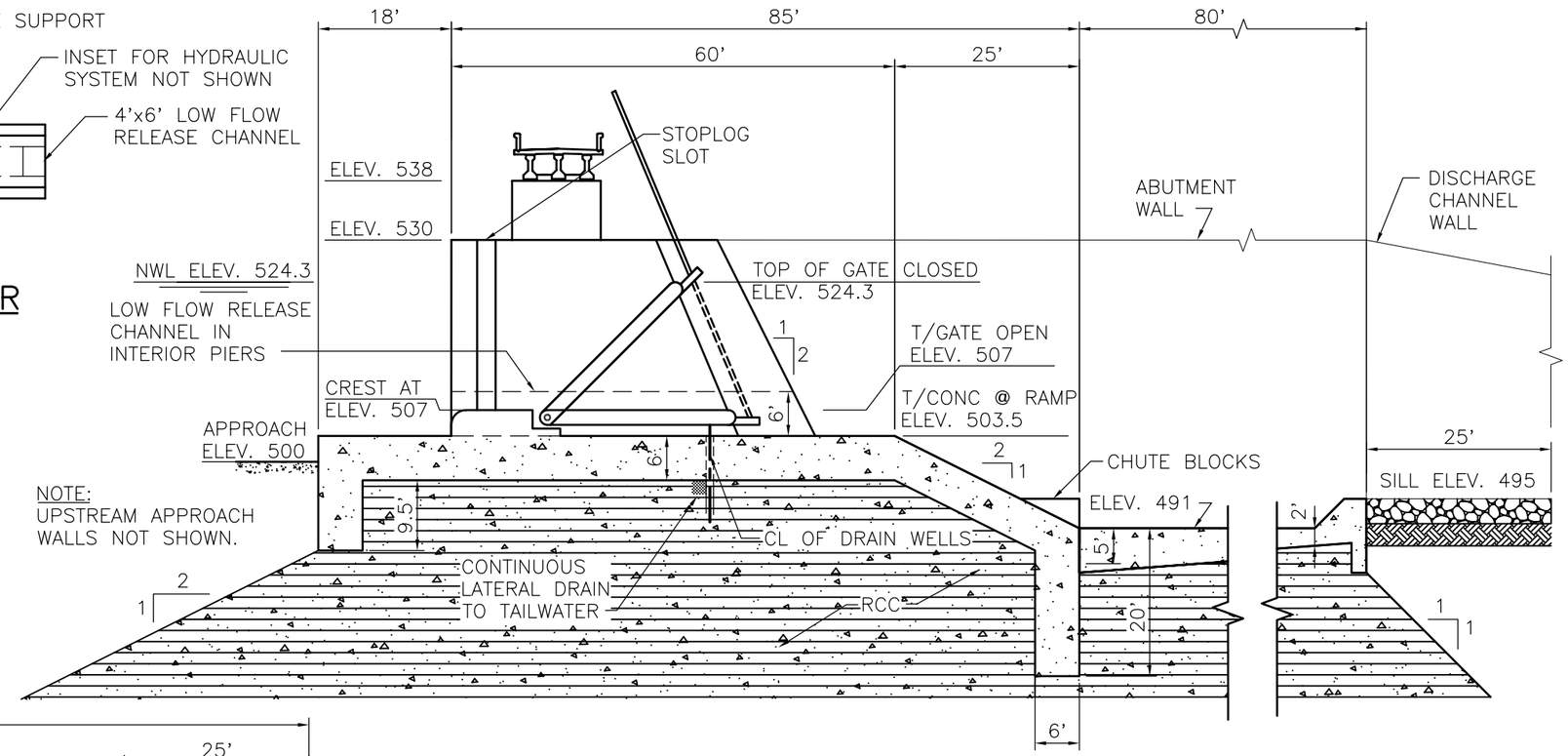


NOTE:
UPSTREAM APPROACH WALLS NOT SHOWN.

## SECTION AT SOUTH END OF DAM

1"=20'

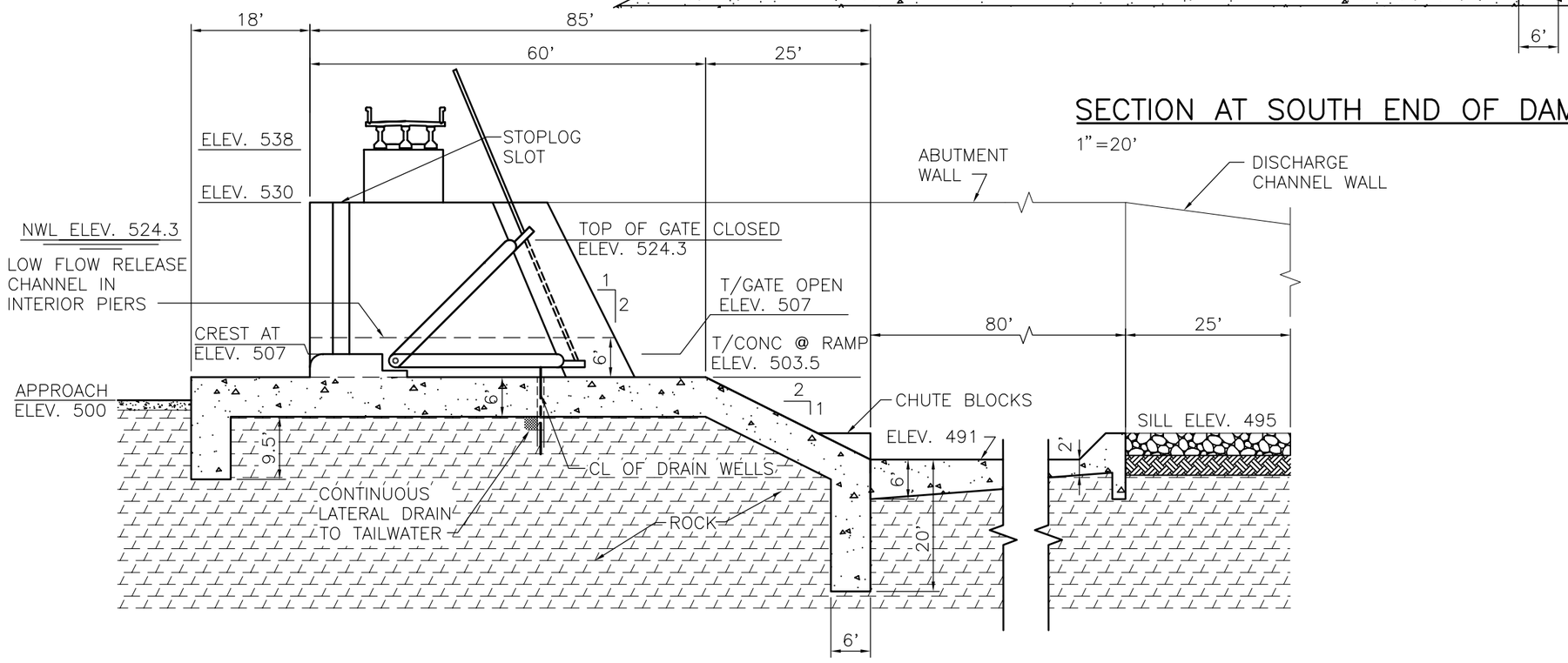


## SECTION AT NORTH END OF DAM

1"=20'

**NOT FOR CONSTRUCTION**

THIS DOCUMENT IS RELEASED FOR THE PURPOSE OF INTERIM REVIEW UNDER THE AUTHORITY OF JOHN LEE RUTLEDGE P.E. TEXAS NO: 65045 ON DATE: 10/5/2004 IT IS NOT TO BE USED FOR CONSTRUCTION, BIDDING OR PERMIT PURPOSES.

US Army Corps of Engineers
Fort Worth District

| Symbol | Description | D.O. NO. | Action | Date |
|---|---|---|---|---|

Designed by: JLR
Dwn by: CAM
Reviewed by: JLR
Submitted by: NAME TITLE
Date: JANUARY 2005
Sol No.
Contr No. CDM04188
File name:
Plot date: OCT. 2004
Plot scale: AS SHOWN

TARRANT REGIONAL WATER DISTRICT

CDM

FORT WORTH CENTRAL CITY
PRELIMINARY DESIGN

**SAMUELS AVENUE DAM**

**PLAN AND SECTIONS**
**SHEET 1 OF 2**

SEQUENCE NO.
SS-4



DESIGN FILE: CV-DAM-SC-GATE

Contr No.

ACAD Rel 16.1s (LMs Tech) User: CAM
[CDM04188]N:\WR\REPORT\CV-DAM-SC-GATE.DWG LAYOUT: Layout1
JAN 06, 2005 1:38:08 P.M. LTS: 1.00 PSLTS: 1 TWIST: 0.0, 0.0, 0.0, 0.0
REFERENCE FILE: N:\STANDARD\2521G-BS

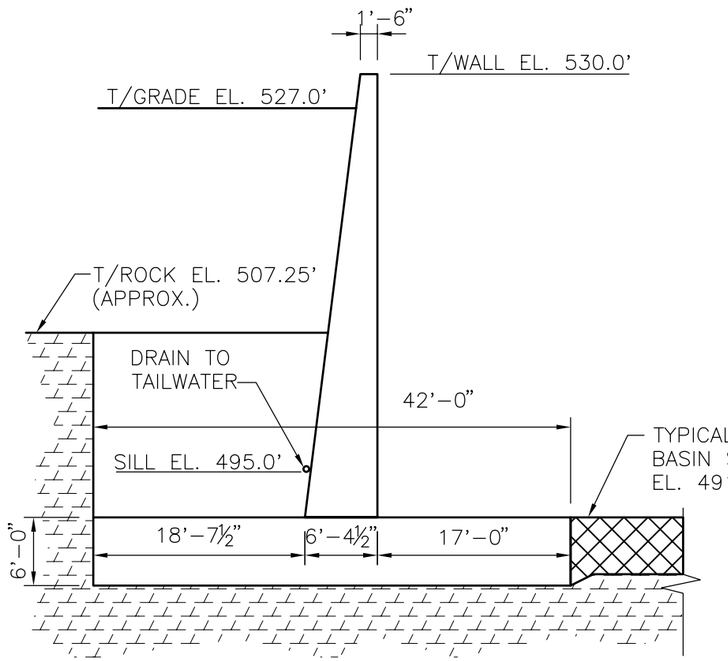


NORTH ABUTMENT AT BASIN

NOT TO SCALE

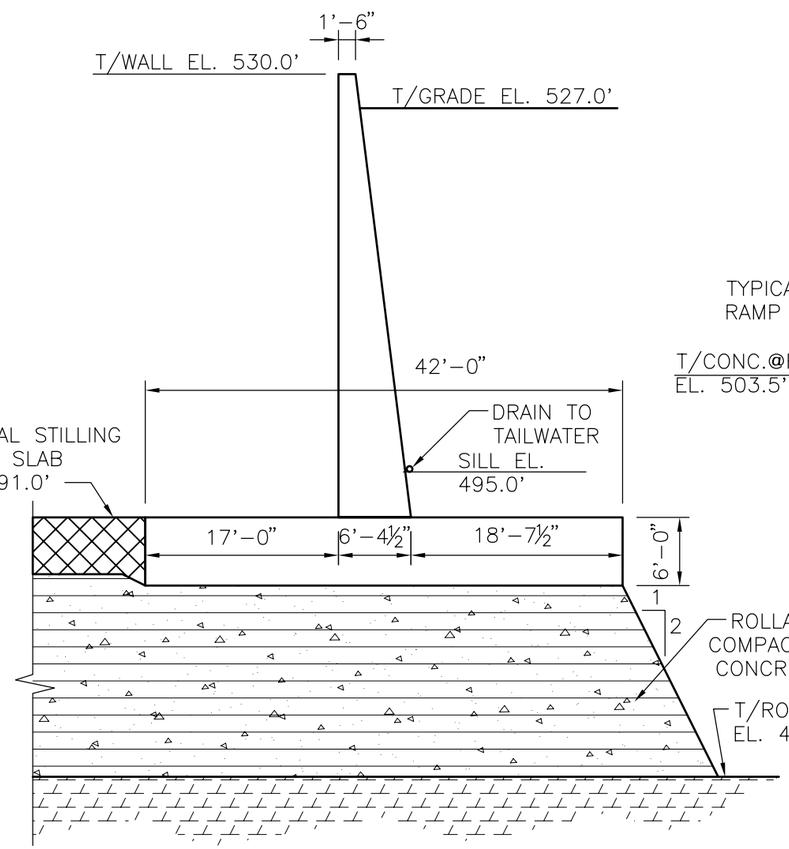


SOUTH ABUTMENT AT BASIN

NOT TO SCALE

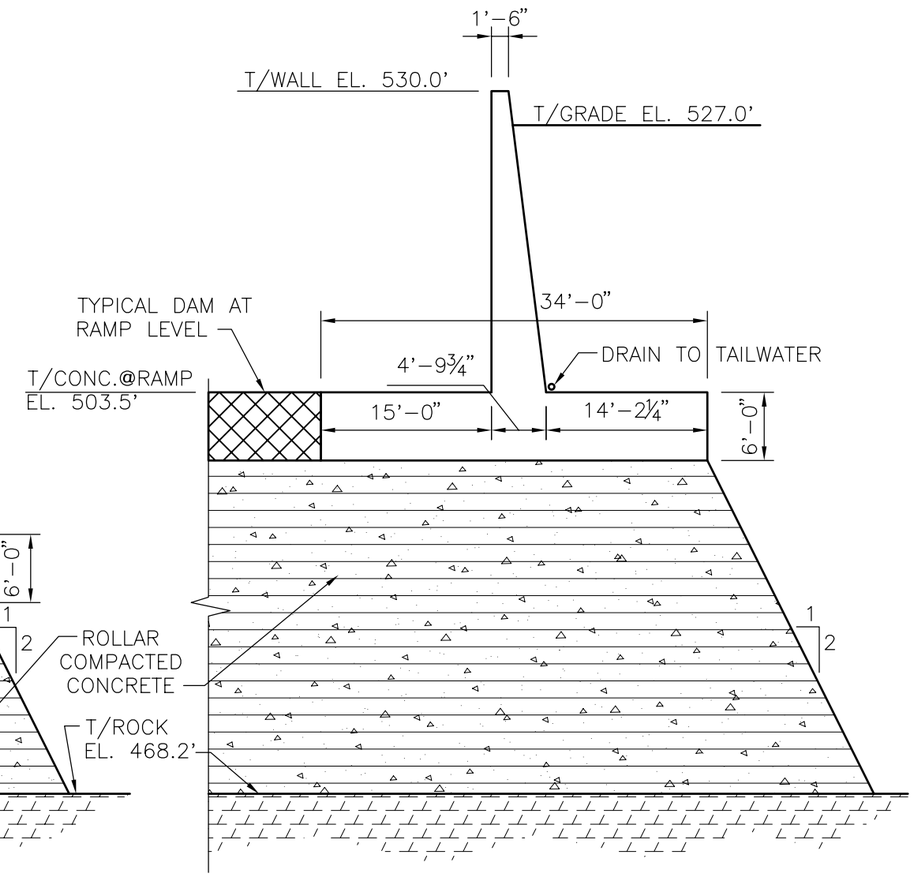


SOUTH ABUTMENT AT RAMP LEVEL

NOT TO SCALE

US Army Corps of Engineers
Fort Worth District

| Symbol | Description | D.O. NO. | Action | Date |
|---|---|---|---|---|

TARRANT REGIONAL WATER DISTRICT

CDM

Designed by: JLR
Dwn by: CAM
Reviewed by: JLR
Submitted by: NAME TITLE

Date: JANUARY 2005
Sol No.
Contr No. CDM04188
File name:
Plot date: OCT. 2004
Plot scale: AS SHOWN

DESIGN FILE: CV-ALL-SC-DAM

FORT WORTH CENTRAL CITY
PRELIMINARY DESIGN
SAMUELS AVENUE DAM

PLAN AND SECTIONS
SHEET 2 OF 2

NOT FOR CONSTRUCTION

THIS DOCUMENT IS RELEASED FOR THE PURPOSE OF INTERIM REVIEW UNDER THE AUTHORITY OF JOHN LEE RUTLEDGE P.E. TEXAS NO: 65045 ON DATE: 10/5/2004 IT IS NOT TO BE USED FOR CONSTRUCTION, BIDDING OR PERMIT PURPOSES.

SEQUENCE NO.
SS-5

Sheet 122 of 139

Contr No.

ACAD Ref To: ts (LMS Tech) User: CAM
[CDM04188]N:\WR\REPORT\CV-ALL-SC-DAM.DWG LAYOUT: Layout1
JAN 06, 2005 1:36:22 P.M. LTS: 1.00 PSLTS: 1 TWIST: 0.0
REFERENCE FILE: N:\STANDARD\2521G-BS

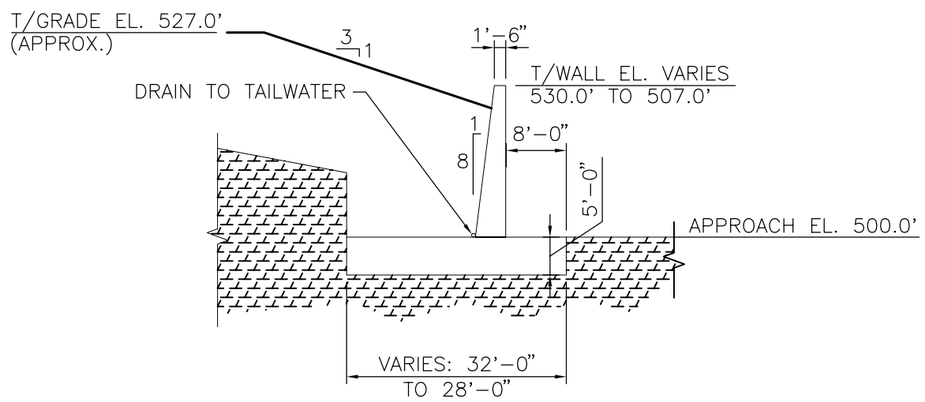


## LEFT UPSTREAM TRAINING WALL

1"=20'

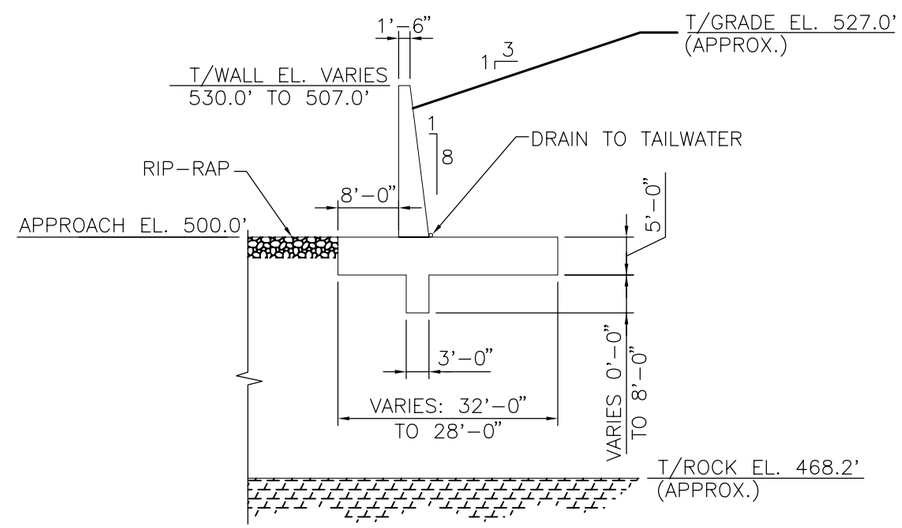


## RIGHT UPSTREAM TRAINING WALL

1"=20'

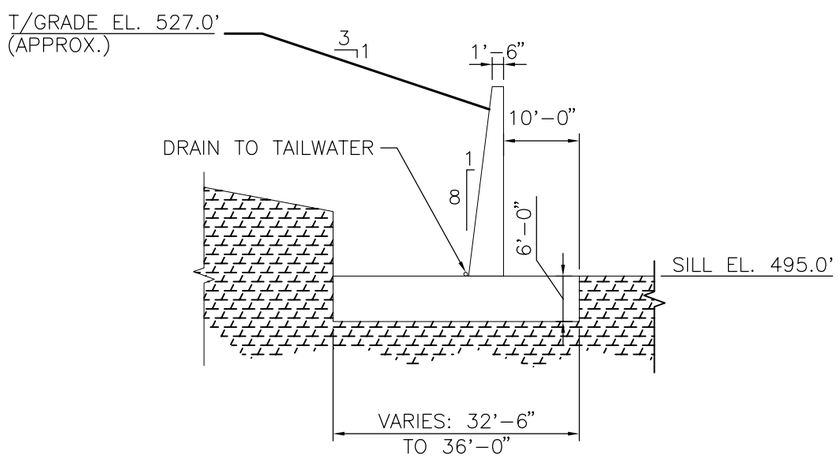


## LEFT DOWNSTREAM TRAINING WALL

1"=20'

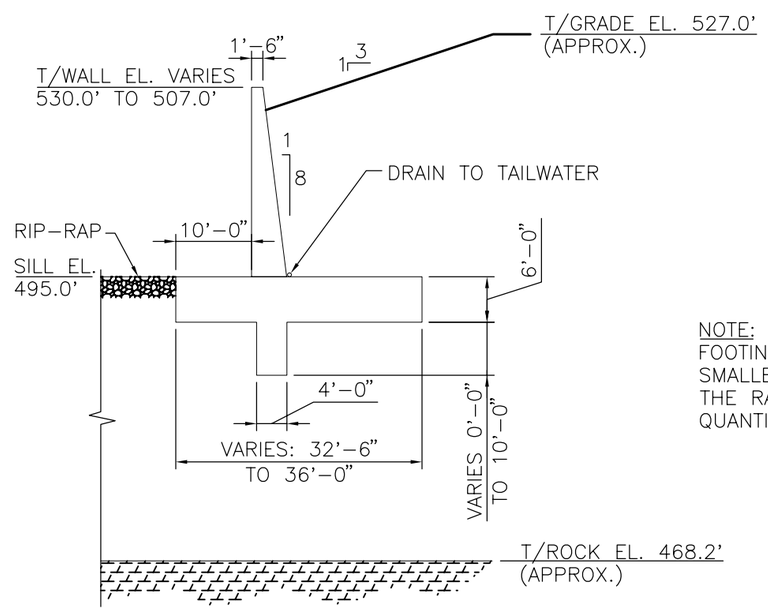


## RIGHT DOWNSTREAM TRAINING WALL

1"=20'

NOTE:
FOOTING SECTIONS WILL BE SIGNIFICANTLY SMALLER FOR WALL HEIGHTS LESS THAN THE RANGE SHOWN. THESE WERE NOT QUANTIFIED FOR PRELIMINARY DESIGN.

0 10' 20' 40'
SCALE IN FEET

**NOT FOR CONSTRUCTION**
THIS DOCUMENT IS RELEASED FOR THE PURPOSE OF INTERIM REVIEW UNDER THE AUTHORITY OF BRAD B. WATSON TEXAS NO: 80318 ON DATE: 8/17/2004 IT IS NOT TO BE USED FOR CONSTRUCTION, BIDDING OR PERMIT PURPOSES.

US Army Corps of Engineers
Fort Worth District

| Symbol | Description | D.O. NO. | Action | Date |
|---|---|---|---|---|

Designed by: JLR
Dwn by: CAM
Reviewed by: JLR
Submitted by: NAME TITLE
Date: JANUARY 2005
Sol No.
Contr No. CDM04188
File name:
Plot date: OCT. 2004
Plot scale: AS SHOWN

TARRANT REGIONAL WATER DISTRICT
CDM

FORT WORTH CENTRAL CITY PRELIMINARY DESIGN
**SAMUELS AVENUE DAM**
**TRAINING WALLS**

SEQUENCE NO.
SS-6
Sheet 123 of 139

DESIGN FILE: CV-WALL-SC-WALL

Contr No.

ACAD Rel 16.1s (LMS Tech) User: CAM
[CDM04188]N:\WR\REPORT\CV-DAM-SC-WALL.DWG LAYOUT: Layout1
JAN 06, 2005 1:39:03 P.M. LTS: 1.00 PSLTS: 1 TWIST: 0.0
REFERENCE FILE: N:\STANDARD\25216-BS

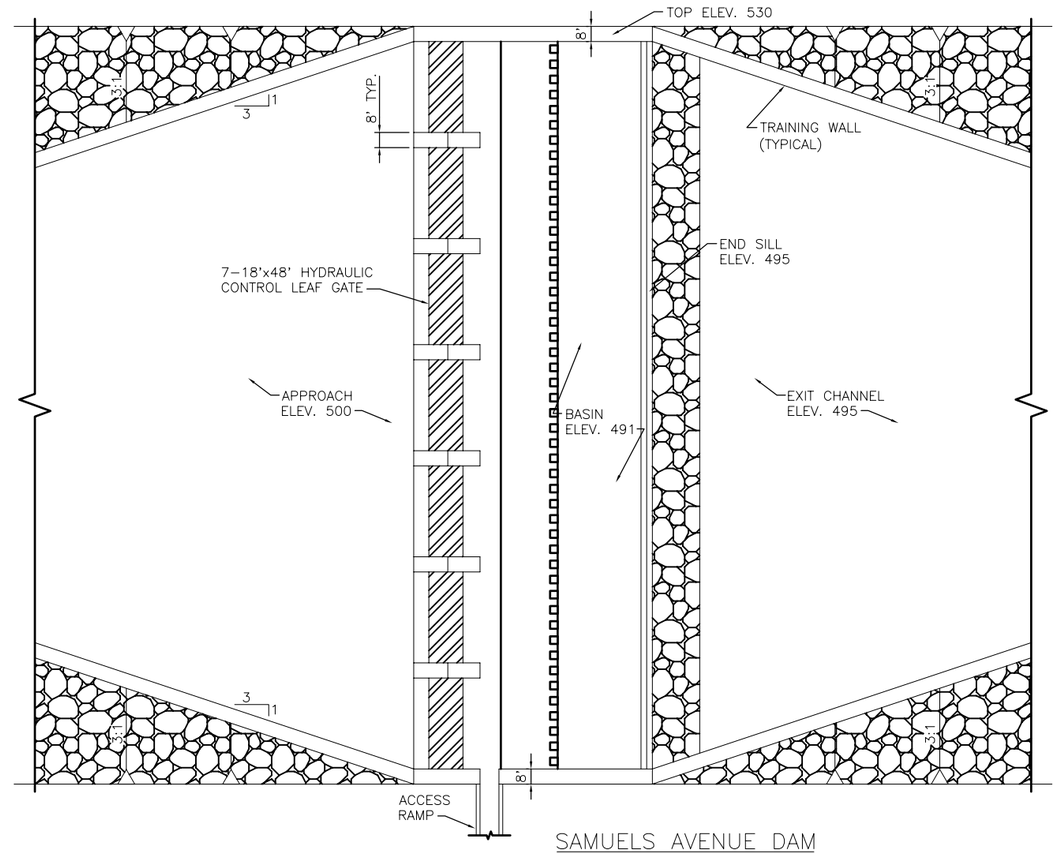


SAMUELS AVENUE DAM
1"=40'

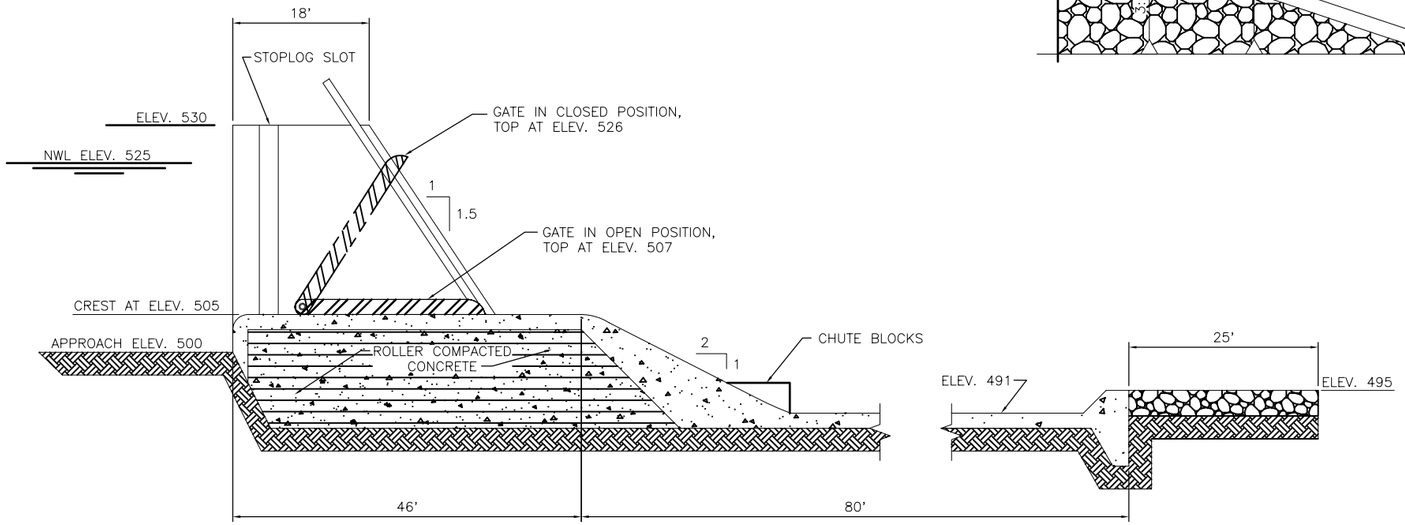


SAMUELS AVENUE DAM
1"=10'

US Army Corps of Engineers
Fort Worth District

| Symbol | Description | D.O. NO. | Action | Date |
|---|---|---|---|---|

Designed by: JLR
Dwn by: CAM
Reviewed by: JLR
Submitted by: NAME TITLE
Date: JANUARY 2005
Sol No.
Contr No. CDM04188
File name:
Plot date: OCT. 2004
Plot scale: AS SHOWN

TARRANT REGIONAL WATER DISTRICT

CDM

FORT WORTH CENTRAL CITY
PRELIMINARY DESIGN
SAMUELS AVENUE DAM
TYPICAL SECTION

NOT FOR CONSTRUCTION
THIS DOCUMENT IS RELEASED FOR THE PURPOSE OF INTERIM REVIEW UNDER THE AUTHORITY OF JOHN LEE RUTLEDGE P.E. TEXAS NO: 65045 ON DATE: 10/5/2004 IT IS NOT TO BE USED FOR CONSTRUCTION, BIDDING OR PERMIT PURPOSES.

SEQUENCE NO.
SS-7
Sheet 124 of 139

DESIGN FILE: CV-DAM-SC-TYPL

Contr No.

ACAD Rel 16.1s (LMS Tech) User: CAM
[CDM04188]N:\WR\REPORT\CV-DAM-SC-TYPL.DWG LAYOUT: Layout1
JAN 10, 2005 7:21:06 A.M. LTS: 1.00 PSLTS: 1 TWIST: 0.0, 0.0
REFERENCE FILE: N:\STANDARD\2521G-BS

DESIGN SUMMARY

| LOAD CASE | FX TOTAL (KLF) | FY TOTAL (KLF) | FZ TOTAL (KLF) | e (FT) | FS SLIDE | BASE IN COMPRESSION (%) | BEARING PRESSURE (KSF) HEEL | BEARING PRESSURE (KSF) TOE |
|---|---|---|---|---|---|---|---|---|
| I | 90.2 | 0.0 | 390.1 | −8.54 | 2.02 | 100.0 | 2.373 | 1.426 |
| | | | | | | | | |

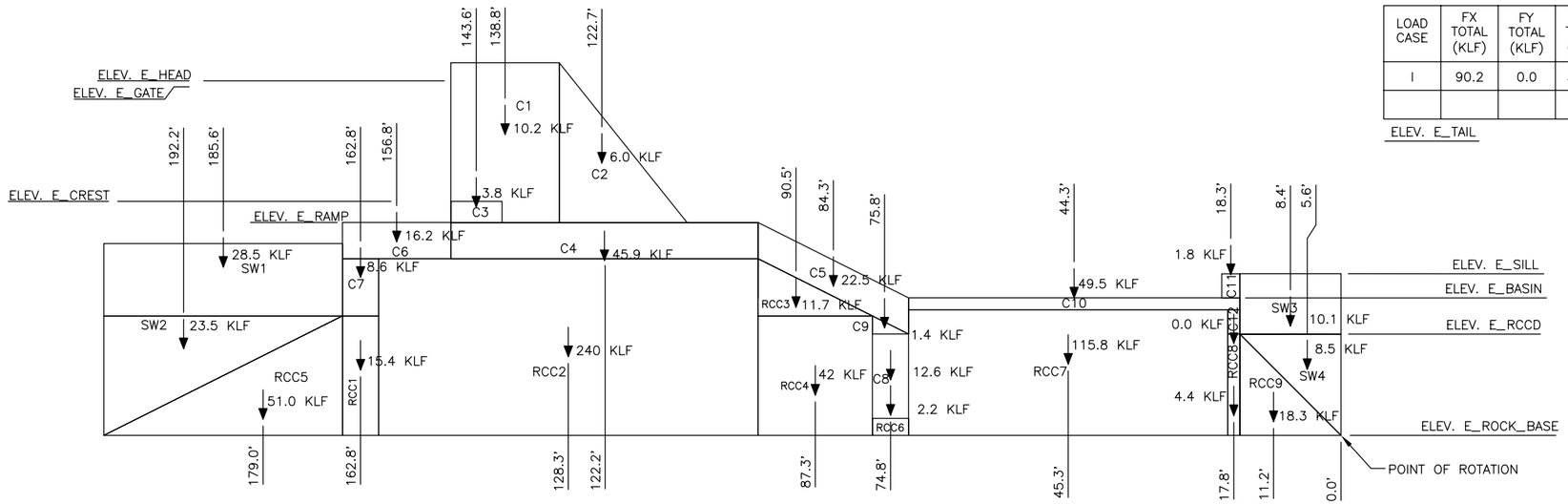


## DAM ON RCC – GRAVITY LOADS W/ OUT HYDRAULIC LOADS

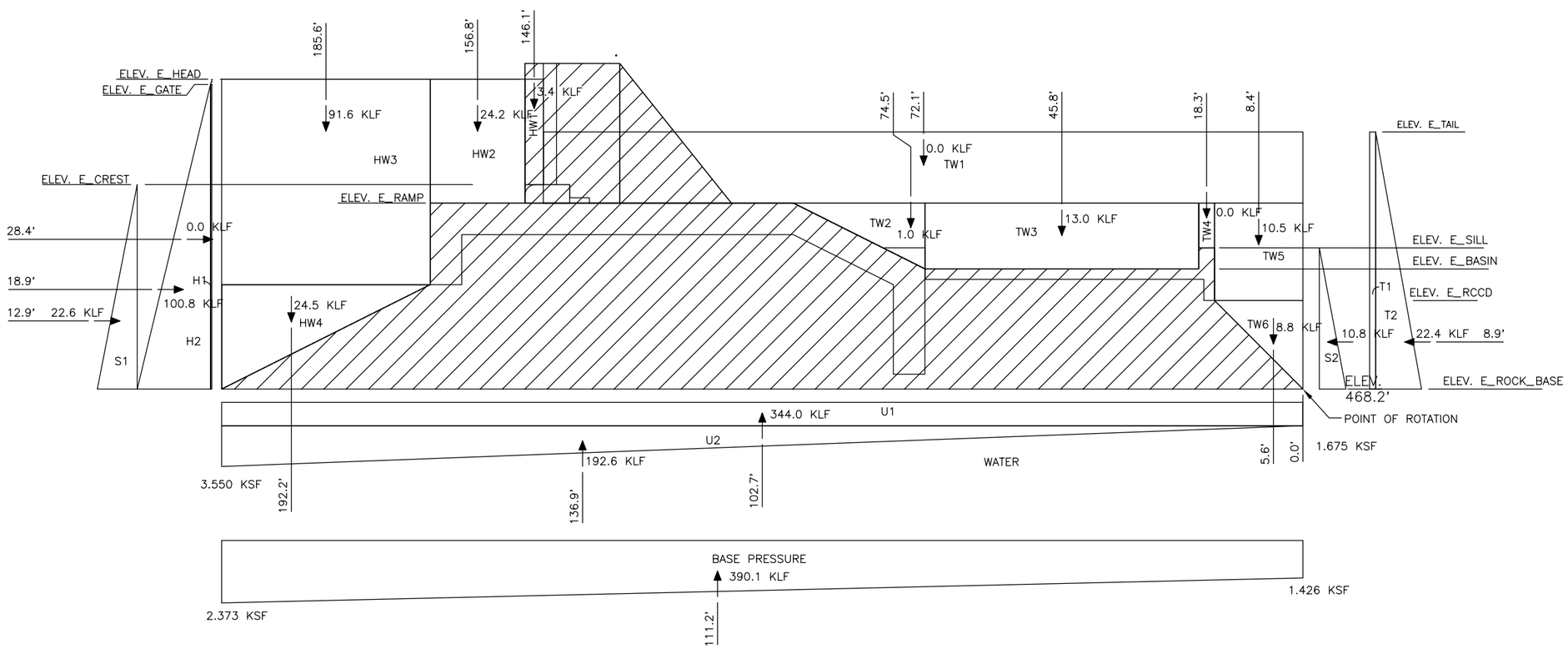


## DAM ON RCC – HYDRAULIC AND LATERAL LOADS

LEGEND:

FX = SUM OF ALL HORIZONTAL FORCES IN THE GLOBAL X DIRECTION (POSITIVE DOWNSTREAM) CONSIDERING ANY UPLIFT EFFECTS

FY = SUM OF ALL HORIZONTAL FORCES IN THE GLOBAL Y DIRECTION CONSIDERING ANY UPLIFT EFFECTS

FZ = SUM OF ALL VERTICAL FORCES IN THE GLOBAL Z DIRECTION (POSITIVE DOWNWARD) CONSIDERING ANY UPLIFT EFFECTS

e = DISTANCE BETWEEN RESULTANT AND CENTROID OF BASE CONSIDERING ANY UPLIFT EFFECTS

FS = FACTOR OF SAFETY FOR SLIDING STABILITY

DESIGN PARAMETERS:

WATER = 0.0625 KCF
CONCRETE = 0.150 KCF
WIND = NOT CONSIDERED
SEISMIC = NOT CONSIDERED

SLIDING FAILURE PLANE:
ø = 25°
C = 0 KSF

LOADING CONDITIONS:

I NORMAL OPERATING CONDITION, HEADWATER ELEV. 525.0–FT FLOWING OVER CLOSED GATES AND TAILWATER ELEV. 495.0–FT, 100% UPLIFT

**NOT FOR CONSTRUCTION**

THIS DOCUMENT IS RELEASED FOR THE PURPOSE OF INTERIM REVIEW UNDER THE AUTHORITY OF JOHN LEE RUTLEDGE P.E. TEXAS NO: 65045 ON DATE: 10/5/2004 IT IS NOT TO BE USED FOR CONSTRUCTION, BIDDING OR PERMIT PURPOSES.

US Army Corps of Engineers
Fort Worth District

| Symbol | Description | D.O. NO. | Action | Date |
|---|---|---|---|---|

Date: JANUARY 2005
Sol No.
Contr. No. CDM04188
File name:
Plot date: OCT. 2004
Plot scale: AS SHOWN
Designed by: JLR
Dwn by: CAM
Reviewed by: JLR
Submitted by: NAME TITLE

TARRANT REGIONAL WATER DISTRICT

CDM

FORT WORTH CENTRAL CITY PRELIMINARY DESIGN
SAMUELS AVENUE DAM
DAM ON RCC ROTATIONAL & SLIDING STABILITY ANALYSES

SEQUENCE NO.
SS–8

Sheet 125 of 139

DESIGN FILE: ST–DAM–EL–B01

Contr No.

RCAD rev 10.15 (LMW) (LMW) User: CMW
[CDM04188]N:\WR\REPORT\ST-DAM-EL-B01.DWG LAYOUT: Layout1
JAN 11, 2005 10:35:29 AM XTS: 1.00 PSLTS: 1 TWIST: 0.0
REFERENCE FILE: N:\STANDARD\2521G-BS

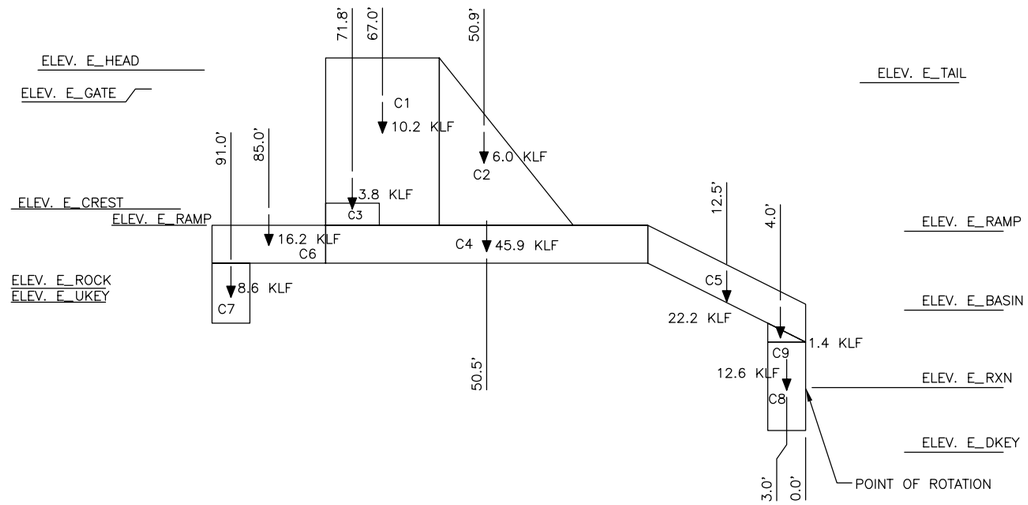


## DAM ON ROCK – GRAVITY LOADS W/ OUT HYDRAULIC LOADS

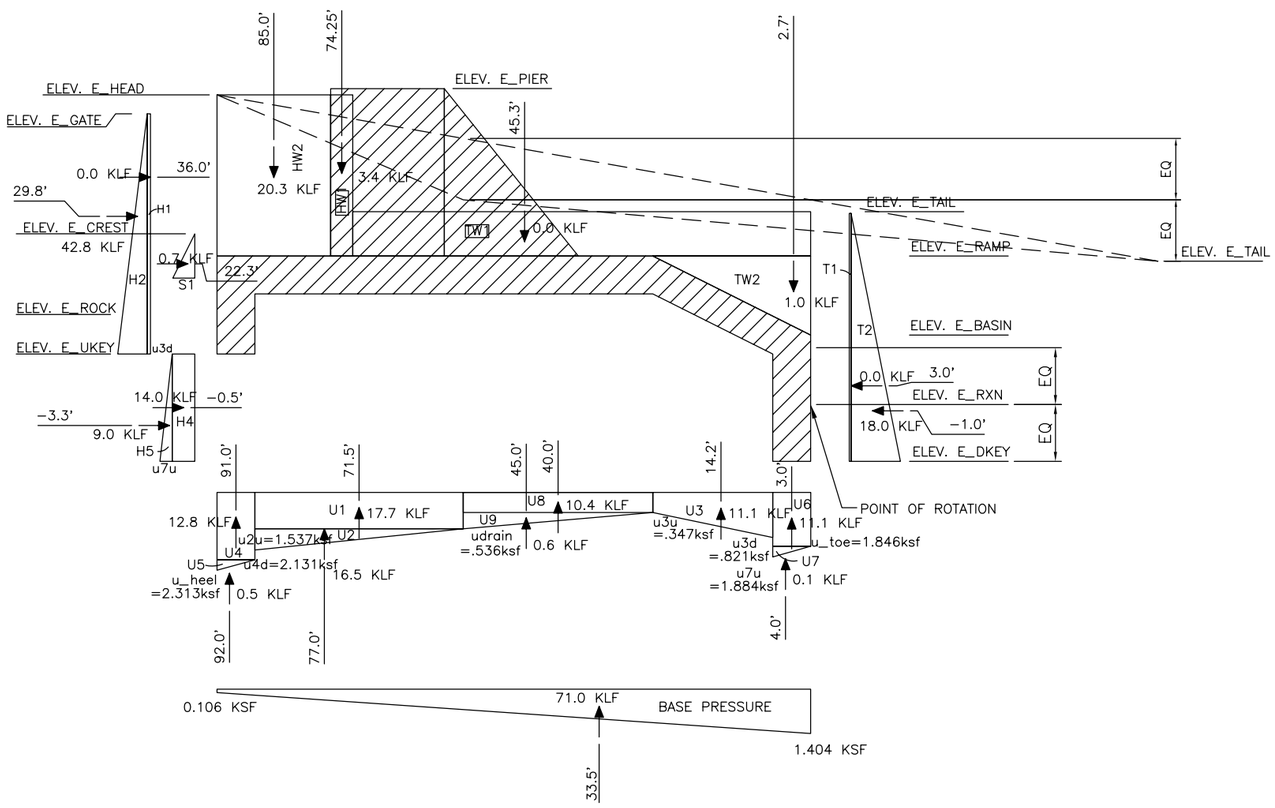


## DAM ON ROCK – HYDRAULIC AND LATERAL LOADS

DESIGN SUMMARY

| LOAD CASE | FX TOTAL (KLF) | FY TOTAL (KLF) | FZ TOTAL (KLF) | e (FT) | FS SLIDE | BASE IN COMPRESSION (%) | BEARING PRESSURE (KSF) | |
|---|---|---|---|---|---|---|---|---|
| | | | | | | | HEEL | TOE |
| I | 48.5 | 0.0 | 71.0 | 13.46 | SEE SHT SS–10 | 100.0 | 0.106 | 1.404 |
| | | | | | | | | |
| | | | | | | | | |

LEGEND:

FX = SUM OF ALL HORIZONTAL FORCES IN THE GLOBAL X DIRECTION (POSITIVE DOWNSTREAM) CONSIDERING ANY UPLIFT EFFECTS

FY = SUM OF ALL HORIZONTAL FORCES IN THE GLOBAL Y DIRECTION CONSIDERING ANY UPLIFT EFFECTS

FZ = SUM OF ALL VERTICAL FORCES IN THE GLOBAL Z DIRECTION (POSITIVE DOWNWARD) CONSIDERING ANY UPLIFT EFFECTS

e = DISTANCE BETWEEN RESULTANT AND CENTROID OF BASE CONSIDERING ANY UPLIFT EFFECTS

FS = FACTOR OF SAFETY FOR SLIDING STABILITY

DESIGN PARAMETERS:

WATER = 0.0625 KCF
CONCRETE= 0.150 KCF
WIND = NOT CONSIDERED
SEISMIC = NOT CONSIDERED

SLIDING FAILURE PLANE:
ø= 25'
C = 0 KSF

LOADING CONDITIONS:

I NORMAL OPERATING CONDITION, HEADWATER ELEV. 525.0–FT FLOWING OVER CLOSED GATES AND TAILWATER ELEV. 495.0–FT, 100% UPLIFT

NOT FOR CONSTRUCTION

THIS DOCUMENT IS RELEASED FOR THE PURPOSE OF INTERIM REVIEW UNDER THE AUTHORITY OF JOHN LEE RUTLEDGE P.E. TEXAS NO: 65045 ON DATE: 10/5/2004 IT IS NOT TO BE USED FOR CONSTRUCTION, BIDDING OR PERMIT PURPOSES.

US Army Corps of Engineers
Fort Worth District

| Symbol | Description | D.O. NO. | Action | Date |
|---|---|---|---|---|

Date: JANUARY 2005
Sol No.
Contr. No. CDM04188
File name:
Plot date: OCT. 2004
Plot scale: AS SHOWN

Designed by: JLR
Dwn by: CAM
Reviewed by: JLR
Submitted by: NAME TITLE

TARRANT REGIONAL WATER DISTRICT

CDM

FORT WORTH CENTRAL CITY PRELIMINARY DESIGN
SAMUELS AVENUE DAM
DAM ON ROCK
ROTATIONAL STABILITY ANALYSES

SEQUENCE NO.
SS–9



DESIGN FILE: ST-DAM-EL-B02

Contr No.

PLOT DATE: 10/13/2004 TIME: 10:17
[CDM04188]N:\WR\REPORT\ST-DAM-EL-B02.DWG LAYOUT: Layout1
JAN 20, 2005 11:29:05 AM XREFS: 0 PSLTS: 1 TWIST: 0.0
REFERENCE FILE: N:\STANDARD\25216-BS

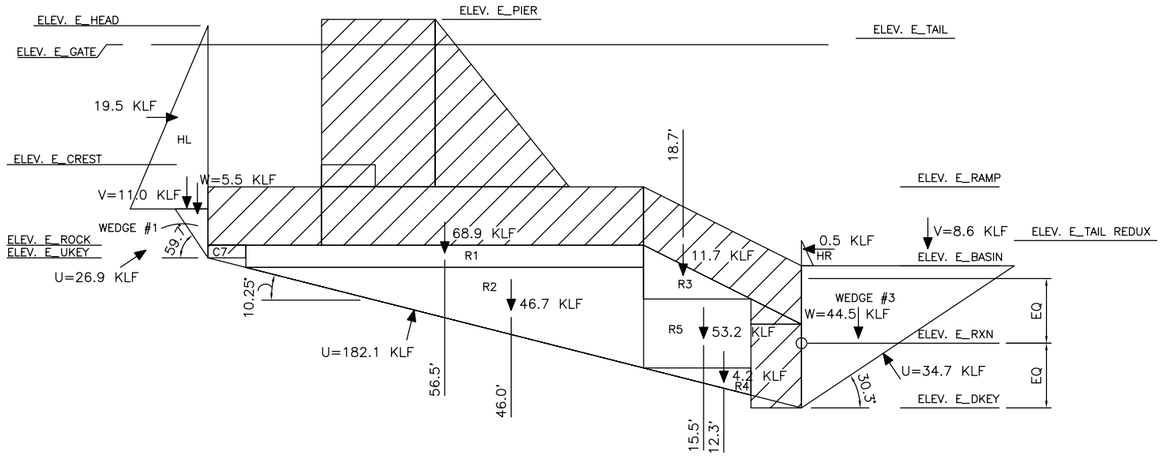


DAM ON ROCK – SLIDING FAILURE PLANE #1

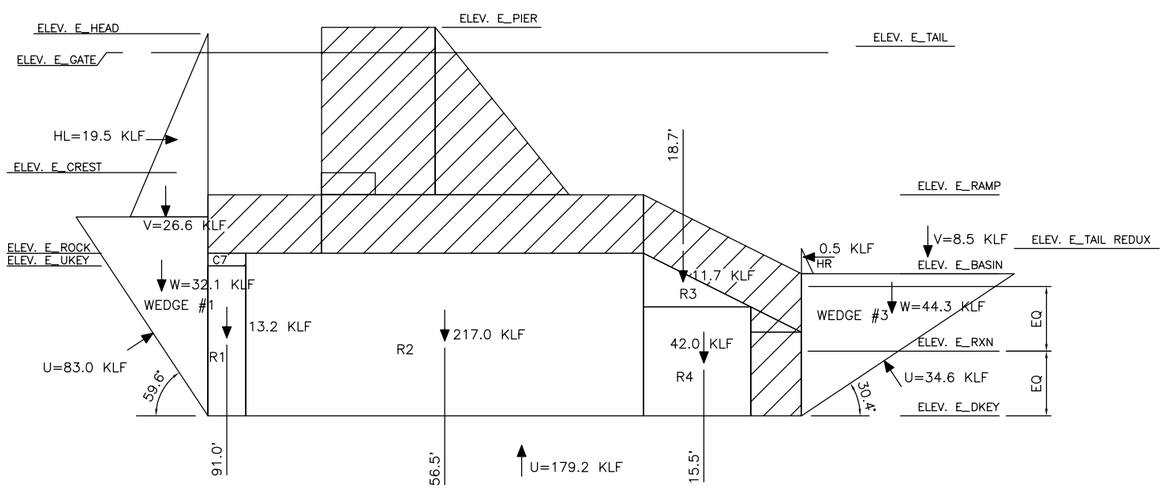


DAM ON ROCK – SLIDING FAILURE PLANE #2

DESIGN PARAMETERS:

WATER = 0.0625 KCF
CONCRETE= 0.150 KCF
WIND = NOT CONSIDERED
SEISMIC = NOT CONSIDERED

SLIDING ANALYSES:

THIN SEAMS OF SHALE ARE EXPECTED WITHIN OTHERWISE COMPETENT LIMESTONE SUBSTRATE. THUS INCLINED FAILURE PLANES WERE ASSUMED TO HAVE STRENGTH PARAMETERS CONSISTENT WITH COMPETENT LIMESTONE. HORIZONTAL FAILURE PLANES WERE ASSUMED TO HAVE LOW STRENGTH VALUES BASED ON A SHALE SEAM.

FAILURE PLANE #1

| WEDGE | ø | C (KSF) |
|---|---|---|
| DRIVING WEDGE (#1) | 50° | 0.0 |
| STRUCTURAL WEDGE (#2) | 50° | 0.0 |
| RESISTING WEDGE (#3) | 50° | 0.0 |

FAILURE PLANE #2

| WEDGE | ø | C (KSF) |
|---|---|---|
| DRIVING WEDGE (#1) | 50° | 0.0 |
| STRUCTURAL WEDGE (#2) | 20° | 0.0 |
| RESISTING WEDGE (#3) | 50° | 0.0 |

LOADING CONDITIONS:

I NORMAL OPERATING CONDITION, HEADWATER ELEV. 525.0–FT FLOWING OVER CLOSED GATES AND TAILWATER ELEV. 495.0–FT, 100% UPLIFT

US Army Corps of Engineers
Fort Worth District

| Symbol | Description | D.O. NO. | Action | Date |
|---|---|---|---|---|

Designed by: JLR
Dwn by: CAM
Reviewed by: JLR
Submitted by: NAME TITLE
Date: JANUARY 2005
Sol No.
Contr No. CDM04188
File name:
Plot date: OCT. 2004
Plot scale: AS SHOWN

TARRANT REGIONAL WATER DISTRICT

CDM

FORT WORTH CENTRAL CITY
PRELIMINARY DESIGN
SAMUELS AVENUE DAM
DAM ON ROCK
SLIDING STABILITY ANALYSES

NOT FOR CONSTRUCTION
THIS DOCUMENT IS RELEASED FOR THE PURPOSE OF INTERIM REVIEW UNDER THE AUTHORITY OF JOHN LEE RUTLEDGE P.E. TEXAS NO: 65045 ON DATE: 10/5/2004 IT IS NOT TO BE USED FOR CONSTRUCTION, BIDDING OR PERMIT PURPOSES.

SEQUENCE NO.
SS–10
Sheet 127 of 139

DESIGN FILE: ST-DAM-EL-B03

Contr No.

ACAD Ref: 10.1s (LMS Tech) User: CAM
[CDM04188]N:\WR\REPORT\ST-DAM-EL-B03.DWG LAYOUT: Layout1
JAN 11, 2005 10:51:55 A.M. LTS: 1.00 PSLTS: 1 TWIST: 0.0
REFERENCE FILE: N:\STANDARD\2521G-BS

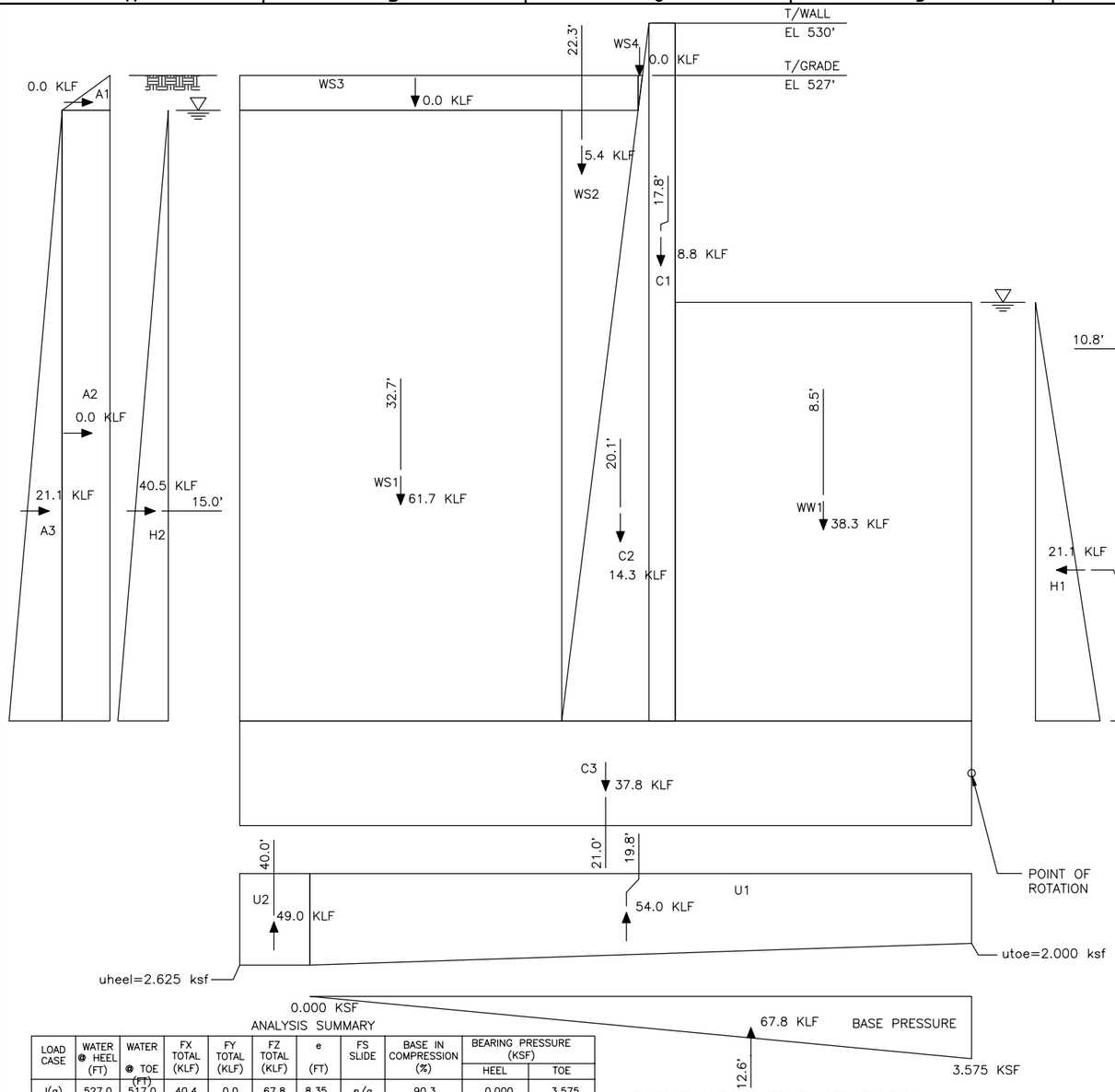


ANALYSIS SUMMARY

| LOAD CASE | WATER @ HEEL (FT) | WATER @ TOE (FT) | FX TOTAL (KLF) | FY TOTAL (KLF) | FZ TOTAL (KLF) | e (FT) | FS SLIDE | BASE IN COMPRESSION (%) | BEARING PRESSURE (KSF) HEEL | BEARING PRESSURE (KSF) TOE |
|---|---|---|---|---|---|---|---|---|---|---|
| I(a) | 527.0 | 517.0 | 40.4 | 0.0 | 67.8 | 8.35 | n/a | 90.3 | 0.000 | 3.575 |
| I(b) | 525.0 | 515.0 | 41.5 | 0.0 | 71.8 | 7.52 | n/a | 96.3 | 0.000 | 3.553 |
| I(c) | 523.0 | 513.0 | 42.4 | 0.0 | 75.6 | 6.78 | n/a | 100.0 | 0.056 | 3.542 |
| I(d) | 521.0 | 511.0 | 43.1 | 0.0 | 78.8 | 6.17 | n/a | 100.0 | 0.223 | 3.529 |
| I(e) | 519.0 | 509.0 | 43.8 | 0.0 | 82.0 | 5.58 | n/a | 100.0 | 0.397 | 3.509 |
| I(f) | 517.0 | 507.0 | 44.3 | 0.0 | 85.2 | 5.02 | n/a | 100.0 | 0.575 | 3.484 |
| I(g) | 515.0 | 505.0 | 44.6 | 0.0 | 88.5 | 4.48 | n/a | 100.0 | 0.758 | 3.455 |
| I(h) | 513.0 | 503.0 | 44.9 | 0.0 | 91.7 | 3.97 | n/a | 100.0 | 0.945 | 3.422 |
| I(i) | 511.0 | 501.0 | 45.0 | 0.0 | 94.9 | 3.49 | n/a | 100.0 | 1.134 | 3.386 |
| I(j) | 509.0 | 499.0 | 45.0 | 0.0 | 95.7 | 2.93 | n/a | 100.0 | 1.324 | 3.231 |
| I(k) | 507.0 | 497.0 | 44.8 | 0.0 | 96.3 | 2.37 | n/a | 100.0 | 1.516 | 3.068 |
| I(l) | 505.0 | 495.0 | 44.6 | 0.0 | 96.9 | 1.82 | n/a | 100.0 | 1.707 | 2.906 |
| I(m) | 503.0 | 495.0 | 43.8 | 0.0 | 103.1 | 0.65 | n/a | 100.0 | 2.228 | 2.681 |
| I(n) | 501.0 | 495.0 | 43.1 | 0.0 | 109.4 | −0.38 | n/a | 100.0 | 2.744 | 2.464 |
| I(o) | 499.0 | 495.0 | 42.6 | 0.0 | 115.7 | −1.27 | n/a | 100.0 | 3.255 | 2.255 |
| I(p) | 497.0 | 495.0 | 42.2 | 0.0 | 122.1 | −2.06 | n/a | 100.0 | 3.764 | 2.052 |
| I(q) | 495.0 | 495.0 | 41.9 | 0.0 | 128.6 | −2.76 | n/a | 100.0 | 4.270 | 1.854 |

## RIGHT ABUTMENT AT BASIN

LEGEND:

FX = SUM OF ALL HORIZONTAL FORCES IN THE GLOBAL X DIRECTION (POSITIVE TOWARD CHANNEL) CONSIDERING ANY UPLIFT EFFECTS

FY = SUM OF ALL HORIZONTAL FORCES IN THE GLOBAL Y DIRECTION CONSIDERING ANY UPLIFT EFFECTS

FZ = SUM OF ALL VERTICAL FORCES IN THE GLOBAL Z DIRECTION (POSITIVE DOWNWARD) CONSIDERING ANY UPLIFT EFFECTS

e = DISTANCE BETWEEN RESULTANT AND CENTROID OF BASE CONSIDERING ANY UPLIFT EFFECTS

FS = FACTOR OF SAFETY FOR SLIDING STABILITY (SLIDING STABILITY WAS NOT ANALYZED BECAUSE SLIDING RESISTANCE IS PROVIDED BY A STRUCTURAL LOAD PATH INTO THE MASS OF THE DAM.)

DESIGN PARAMETERS:

WATER = 0.0625 KCF
CONCRETE= 0.150 KCF
WIND = NOT CONSIDERED
SEISMIC = NOT CONSIDERED

WALL LOADS DUE TO SOIL:
ABOVE WATER TABLE= 0.065 KSF/FT
BELOW WATER TABLE= 0.0325 KSF/FT

LOADING CONDITIONS:

I EXTREME INUNDATION FOLLOWED BY A RAPID DRAW DOWN EVENT. THE HEIGHT OF RETAINED WATER WAS ASSUMED TO BE 10-FT ABOVE THE WATER LEVEL AT THE TOE. THE ANALYSIS WAS RUN FOR A SERIES OF WATER ELEVATIONS OVER THE HEEL RANGING FROM THE RETAINED GRADE ELEVATION DOWN TO THE TOP OF FOOTING ELEVATION. ONLY THE MOST CRITICAL (WATER ELEVATION OVER HEEL AT 527.0-FT) CASE IS PRESENTED IN GRAPHICAL FORM.

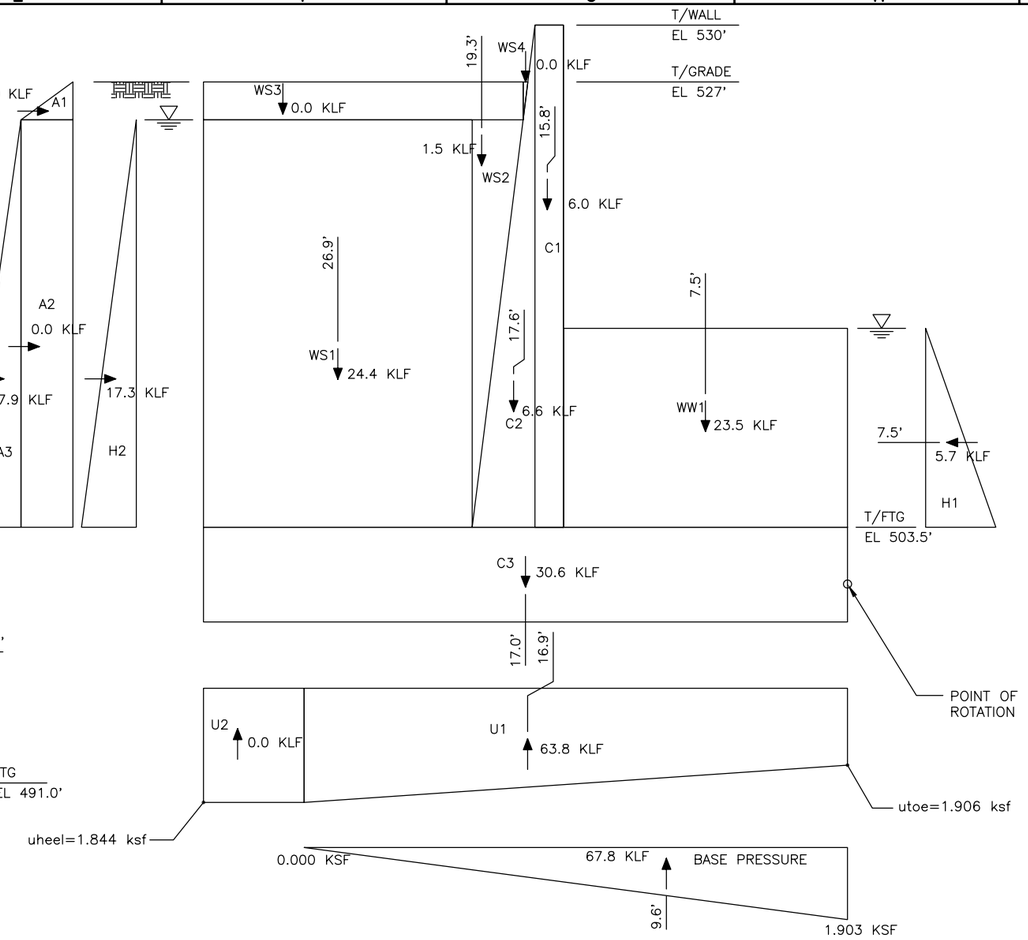


## RIGHT ABUTMENT AT RAMP LEVEL

ANALYSIS SUMMARY

| LOAD CASE | WATER @ HEEL (FT) | WATER @ TOE (FT) | FX TOTAL (KLF) | FY TOTAL (KLF) | FZ TOTAL (KLF) | e (FT) | FS SLIDE | BASE IN COMPRESSION (%) | BEARING PRESSURE (KSF) HEEL | BEARING PRESSURE (KSF) TOE |
|---|---|---|---|---|---|---|---|---|---|---|
| I(a) | 527.0 | 517.0 | 20.5 | 0.0 | 27.3 | 7.44 | n/a | 84.4 | 0.000 | 1.903 |
| I(b) | 524.9 | 514.9 | 20.8 | 0.0 | 27.7 | 5.98 | n/a | 97.3 | −0.000 | 1.672 |
| I(c) | 522.7 | 512.7 | 20.8 | 0.0 | 28.0 | 4.53 | n/a | 100.0 | 0.166 | 1.481 |
| I(d) | 520.6 | 510.6 | 20.8 | 0.0 | 28.3 | 3.09 | n/a | 100.0 | 0.378 | 1.289 |
| I(e) | 518.5 | 508.5 | 20.5 | 0.0 | 28.7 | 1.69 | n/a | 100.0 | 0.592 | 1.096 |
| I(f) | 516.3 | 506.3 | 20.2 | 0.0 | 29.0 | 0.33 | n/a | 100.0 | 0.804 | 0.904 |
| I(g) | 514.2 | 504.2 | 19.6 | 0.0 | 29.4 | −0.98 | n/a | 100.0 | 1.013 | 0.715 |
| I(h) | 512.0 | 503.5 | 19.0 | 0.0 | 32.7 | −2.84 | n/a | 100.0 | 1.444 | 0.480 |
| I(i) | 509.9 | 503.5 | 18.6 | 0.0 | 37.5 | −4.49 | n/a | 100.0 | 1.974 | 0.230 |
| I(j) | 507.8 | 503.5 | 18.2 | 0.0 | 42.3 | −5.72 | n/a | 100.0 | 2.500 | 0.000 |
| I(k) | 505.6 | 503.5 | 18.0 | 0.0 | 47.2 | −6.67 | n/a | 100.0 | 3.023 | 0.000 |
| I(l) | 503.5 | 503.5 | 17.9 | 0.0 | 52.2 | −7.42 | n/a | 100.0 | 3.545 | 0.000 |

**NOT FOR CONSTRUCTION**

THIS DOCUMENT IS RELEASED FOR THE PURPOSE OF INTERIM REVIEW UNDER THE AUTHORITY OF JOHN LEE RUTLEDGE P.E. TEXAS NO: 65045 ON DATE: 10/5/2004 IT IS NOT TO BE USED FOR CONSTRUCTION, BIDDING OR PERMIT PURPOSES.

US Army Corps of Engineers
Fort Worth District

| Symbol | Description | O.D. NO. | Action | Date |
|---|---|---|---|---|

TARRANT REGIONAL WATER DISTRICT

Designed by: JLR
Dwn by: CAM
Reviewed by: JLR
Submitted by: NAME TITLE
Date: JANUARY 2005
Sol No.
Contr. No. CDM04188
File name:
Plot date: OCT. 2004
Plot scale: AS SHOWN

CDM

FORT WORTH CENTRAL CITY PRELIMINARY DESIGN
**SAMUELS AVENUE DAM**
**DAM ABUTMENTS ROTATIONAL STABILITY ANALYSES**

SEQUENCE NO.
SS-11



DESIGN FILE: ST-DAM-EL-B04

Contr No.

PLOT TIME/DATE: OCT 19, 2004 10:12 (JAN 11, 2005 11:20:00 AM) USER: CAM
[CDM04188]N:\WR\REPORT\ST-DAM-EL-B04.DWG LAYOUT: Layout1
JAN 11, 2005 11:20:00 AM LTS: 1.00 PSLTS: 1 TWIST: 0.0
REFERENCE FILE: N:\STANDARD\25210-BS

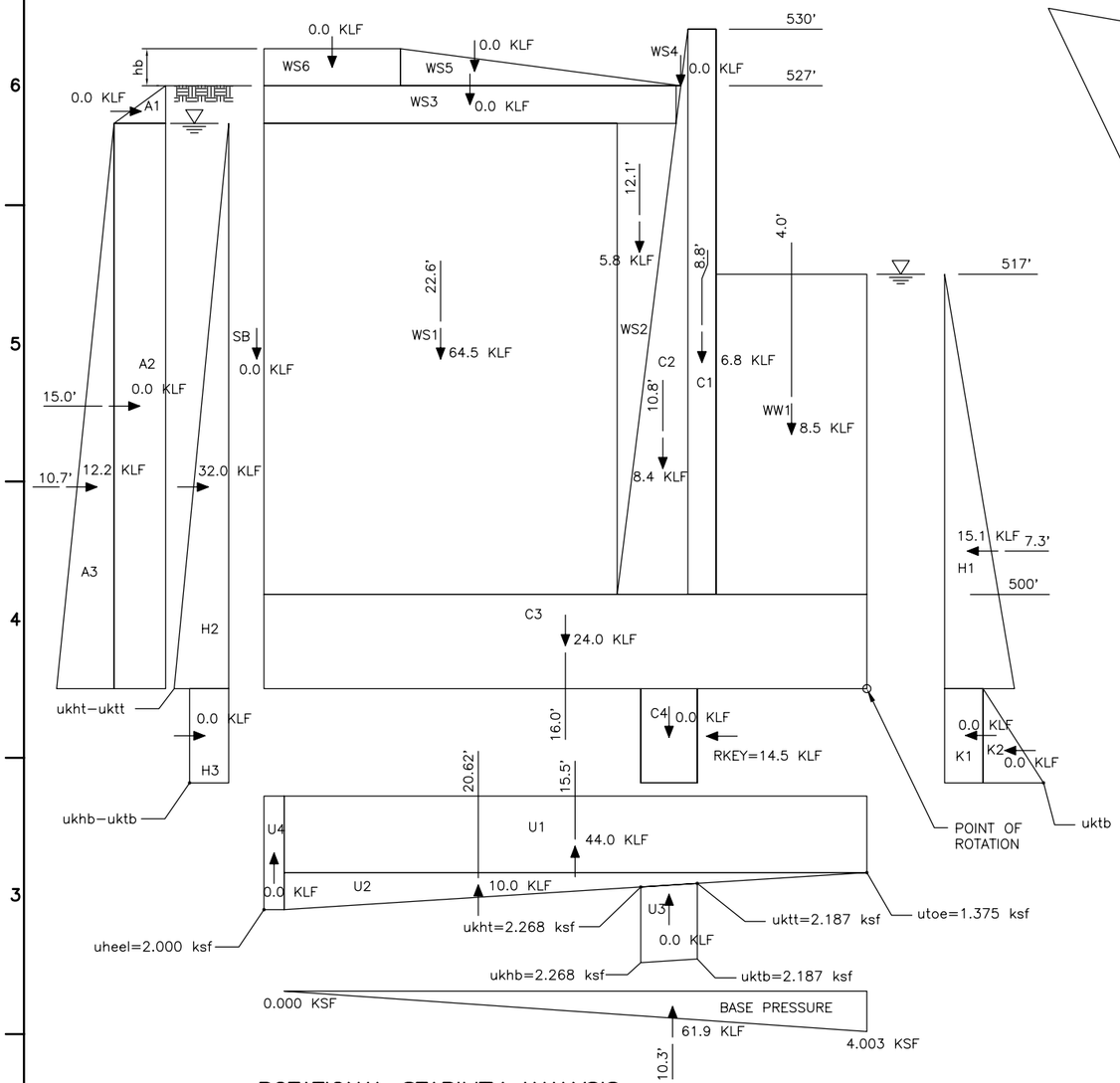


## ROTATIONAL STABILITY ANALYSIS

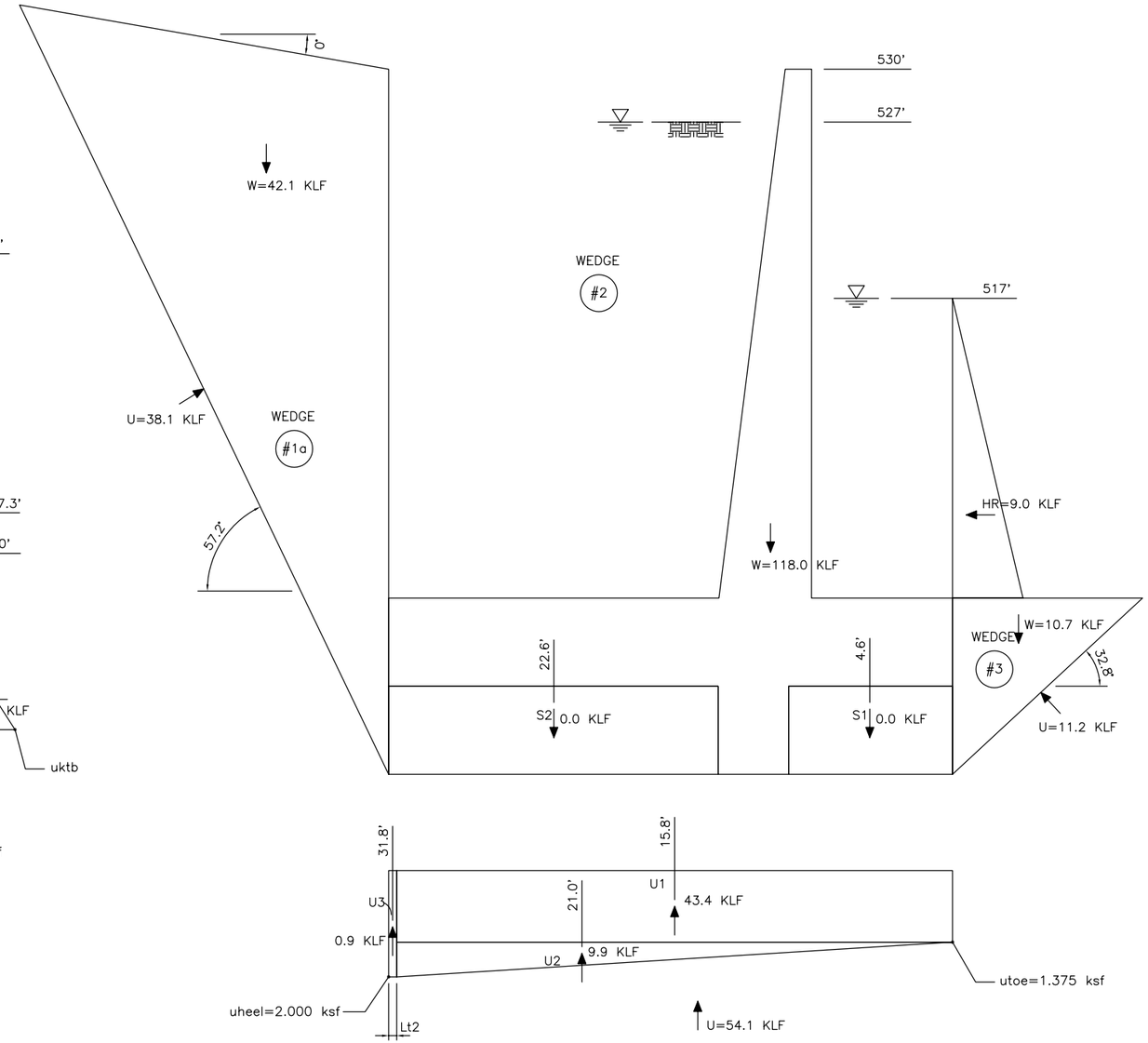


## SLIDING STABILITY ANALYSIS

ROTATIONAL ANALYSIS SUMMARY

| LOAD CASE | WATER @ HEEL (FT) | WATER @ TOE (FT) | FX TOTAL (KLF) | FY TOTAL (KLF) | FZ TOTAL (KLF) | e (FT) | BASE IN COMPRESSION (%) | BEARING PRESSURE (KSF) | | |
|---|---|---|---|---|---|---|---|---|---|---|
| | | | | | | | | HEEL | TOE | FS |
| I(a) | 527.0 | 517.0 | 42.7 | 0.0 | 61.9 | 5.69 | 96.7 | 0.000 | 4.003 | 4.14 |
| I(b) | 521.5 | 511.5 | 47.4 | 0.0 | 72.6 | 4.84 | 100.0 | 0.211 | 4.326 | 3.83 |
| I(c) | 516.0 | 506.0 | 50.6 | 0.0 | 81.1 | 4.08 | 100.0 | 0.597 | 4.474 | 3.71 |
| I(d) | 510.5 | 500.5 | 52.2 | 0.0 | 89.7 | 3.32 | 100.0 | 1.060 | 4.544 | 3.65 |
| I(e) | 505.0 | 500.0 | 51.6 | 0.0 | 95.7 | 2.73 | 100.0 | 1.461 | 4.519 | 3.68 |

LEGEND:

FX = SUM OF ALL HORIZONTAL FORCES IN THE GLOBAL X DIRECTION (POSITIVE TOWARD CHANNEL) CONSIDERING ANY UPLIFT EFFECTS BUT WITHOUT SHEAR KEY RESISTANCE.

FY = SUM OF ALL HORIZONTAL FORCES IN THE GLOBAL Y DIRECTION CONSIDERING ANY UPLIFT EFFECTS

FZ = SUM OF ALL VERTICAL FORCES IN THE GLOBAL Z DIRECTION (POSITIVE DOWNWARD) CONSIDERING ANY UPLIFT EFFECTS

e = DISTANCE BETWEEN RESULTANT AND CENTROID OF BASE CONSIDERING ANY UPLIFT EFFECTS

DESIGN PARAMETERS:

WATER = 0.0625 KCF
CONCRETE= 0.150 KCF
WIND = NOT CONSIDERED
SEISMIC = NOT CONSIDERED

WALL LOADS DUE TO SOIL:
ABOVE WATER TABLE= 0.065 KSF/FT
BELOW WATER TABLE= 0.0325 KSF/FT

LOADING CONDITIONS:

I EXTREME INUNDATION FOLLOWED BY A RAPID DRAW DOWN EVENT. THE HEIGHT OF RETAINED WATER WAS ASSUMED TO BE 10-FT ABOVE THE WATER LEVEL AT THE TOE. THE ANALYSIS WAS RUN FOR A SERIES OF WATER ELEVATIONS OVER THE HEEL RANGING FROM THE RETAINED GRADE ELEVATION DOWN TO THE TOP OF FOOTING ELEVATION. ONLY THE MOST CRITICAL (WATER ELEVATION OVER HEEL AT 527.0-FT) CASE, WITH RESPECT TO SLIDING, IS PRESENTED IN GRAPHICAL FORM.

SLIDING ANALYSIS SUMMARY

| LOAD CASE | WATER @ HEEL (FT) | WATER @ TOE (FT) | DRIVING WEDGE (#1) | | STRUCTURAL WEDGE (#2) | | RESISTING WEDGE (#3) | | FS SLIDE |
|---|---|---|---|---|---|---|---|---|---|
| | | | ø | C (KSF) | ø | C (KSF) | ø | C (KSF) | |
| I(a) | 527.0 | 517.0 | 32° | 0.0 | 32° | 0.0 | 32° | 0.0 | 1.38 |
| I(b) | 521.5 | 511.5 | 32° | 0.0 | 32° | 0.0 | 32° | 0.0 | 1.47 |
| I(c) | 516.0 | 506.0 | 32° | 0.0 | 32° | 0.0 | 32° | 0.0 | 1.57 |
| I(d) | 510.5 | 500.5 | 32° | 0.0 | 32° | 0.0 | 32° | 0.0 | 1.68 |
| I(e) | 505.0 | 500.0 | 32° | 0.0 | 32° | 0.0 | 32° | 0.0 | 1.81 |

**NOT FOR CONSTRUCTION**

THIS DOCUMENT IS RELEASED FOR THE PURPOSE OF INTERIM REVIEW UNDER THE AUTHORITY OF JOHN LEE RUTLEDGE P.E. TEXAS NO: 65045 ON DATE: 10/5/2004 IT IS NOT TO BE USED FOR CONSTRUCTION, BIDDING OR PERMIT PURPOSES.

US Army Corps of Engineers
Fort Worth District

| Symbol | Description | O.D. NO. | Action | Date |
|---|---|---|---|---|

Date: JANUARY 2005
Sol No.
Contr. No. CDM04188
File name:
Plot date: OCT. 2004
Plot scale: AS SHOWN

Designed by: JLR
Dwn by: CAM
Reviewed by: JLR
Submitted by: NAME TITLE

TARRANT REGIONAL WATER DISTRICT

CDM

FORT WORTH CENTRAL CITY PRELIMINARY DESIGN
SAMUELS AVENUE DAM
UPSTREAM TRAINING WALL
SLIDING STABILITY ANALYSES

SEQUENCE NO.
SS-12
Sheet 129 of 139

DESIGN FILE: ST-DAM-EL-B05

Contr No.

ACAD Rel 16.1s (LMS Tech) User: CAM
[CDM04188]N:\WR\REPORT\ST-DAM-EL-B05.DWG LAYOUT: Layout1
JAN 11, 2005 11:29:41 A.M. LTS: 1.00 PSLTS: 1 TWIST: 0.0
REFERENCE FILE: N:\STANDARD\2521G-BS

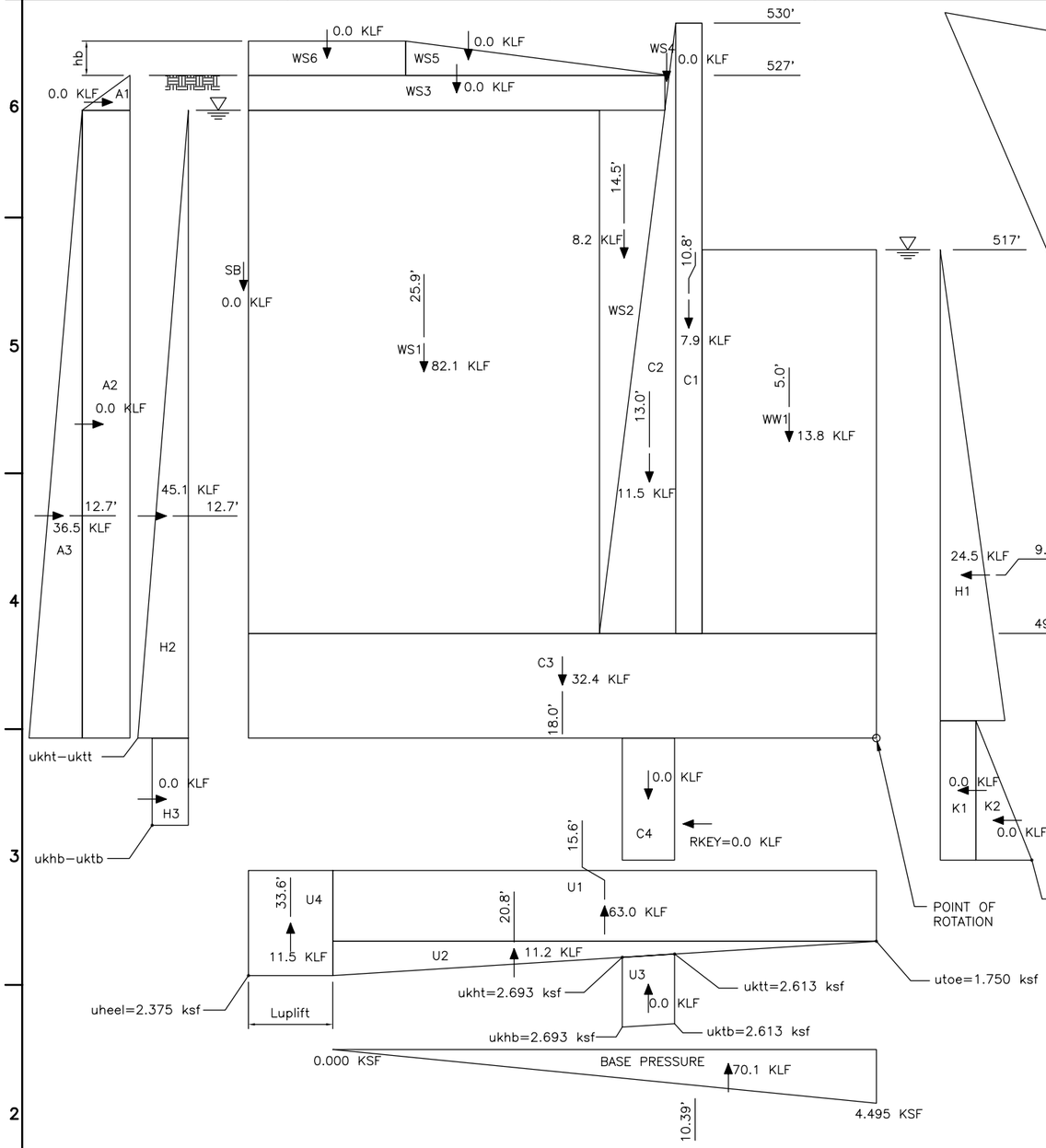


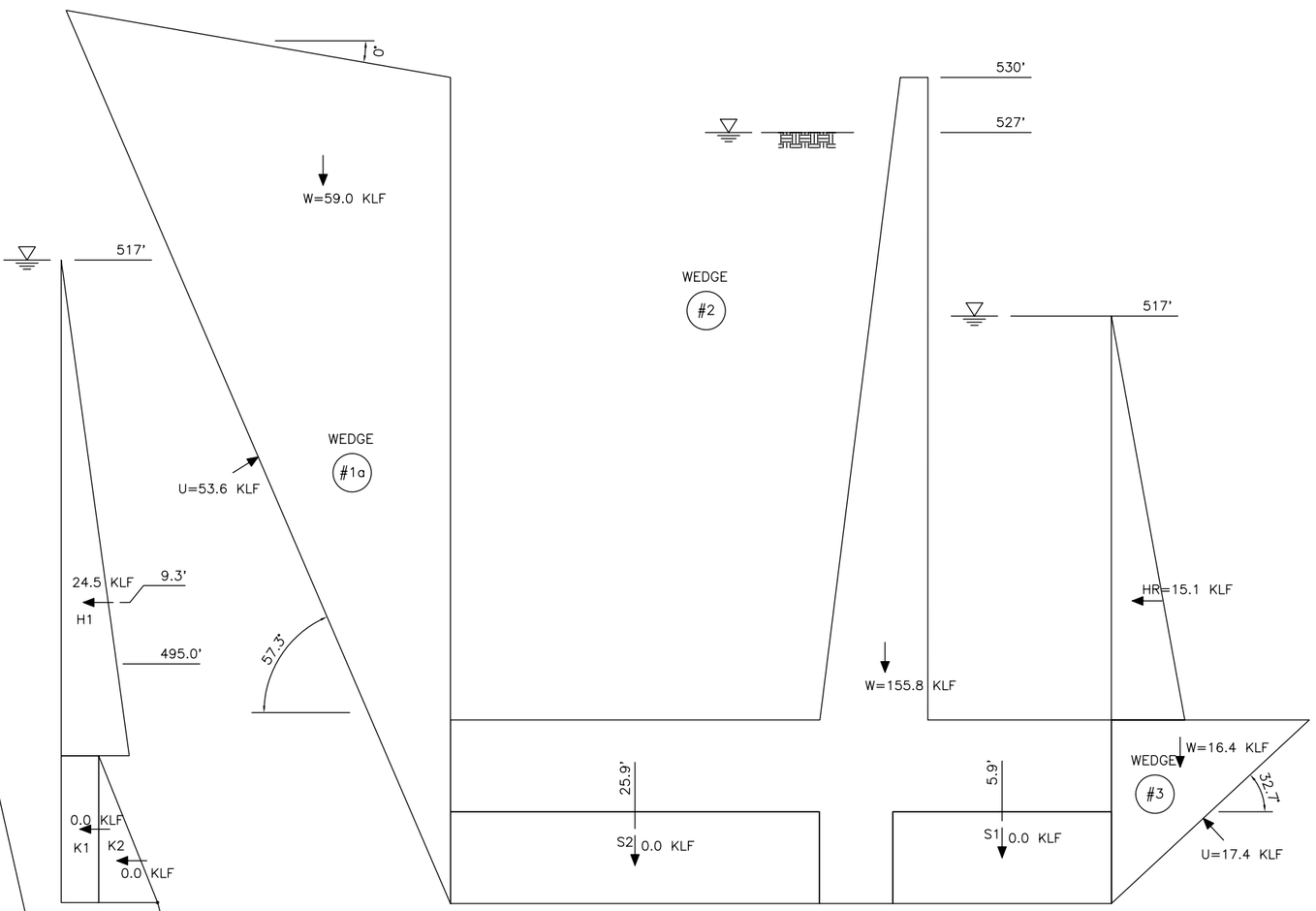


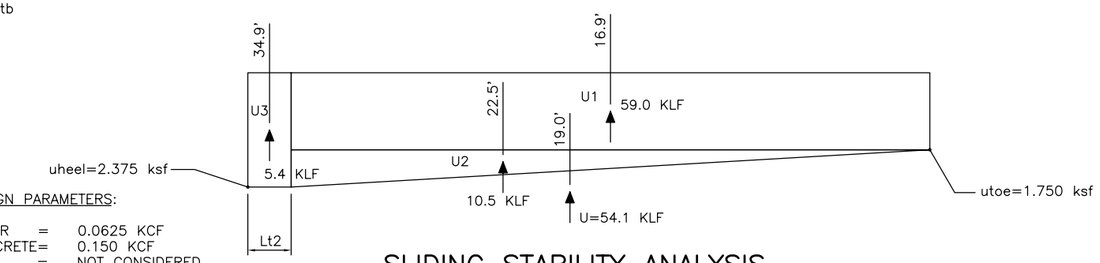


## ROTATIONAL STABILITY ANALYSIS

ROTATIONAL ANALYSIS SUMMARY

| LOAD CASE | WATER @ HEEL (FT) | WATER @ TOE (FT) | FX TOTAL (KLF) | FY TOTAL (KLF) | FZ TOTAL (KLF) | e (FT) | BASE IN COMPRESSION (%) | BEARING PRESSURE (KSF) HEEL | TOE | FS |
|---|---|---|---|---|---|---|---|---|---|---|
| I(a) | 527.0 | 517.0 | 57.1 | 0.0 | 70.1 | 7.61 | 86.6 | 0.000 | 4.495 | 4.02 |
| I(b) | 520.3 | 510.3 | 64.7 | 0.0 | 91.9 | 6.17 | 98.6 | 0.000 | 5.179 | 3.49 |
| I(c) | 513.5 | 503.5 | 70.0 | 0.0 | 104.3 | 5.23 | 100.0 | 0.374 | 5.418 | 3.33 |
| I(d) | 506.8 | 496.8 | 73.0 | 0.0 | 115.6 | 4.29 | 100.0 | 0.914 | 5.508 | 3.28 |
| I(e) | 500.0 | 495.0 | 72.6 | 0.0 | 124.4 | 3.53 | 100.0 | 1.421 | 5.491 | 3.29 |

LEGEND:

FX = SUM OF ALL HORIZONTAL FORCES IN THE GLOBAL X DIRECTION (POSITIVE TOWARD CHANNEL) CONSIDERING ANY UPLIFT EFFECTS BUT WITHOUT SHEAR KEY RESISTANCE.

FY = SUM OF ALL HORIZONTAL FORCES IN THE GLOBAL Y DIRECTION CONSIDERING ANY UPLIFT EFFECTS

FZ = SUM OF ALL VERTICAL FORCES IN THE GLOBAL Z DIRECTION (POSITIVE DOWNWARD) CONSIDERING ANY UPLIFT EFFECTS

e = DISTANCE BETWEEN RESULTANT AND CENTROID OF BASE CONSIDERING ANY

DESIGN PARAMETERS:

WATER = 0.0625 KCF
CONCRETE= 0.150 KCF
WIND = NOT CONSIDERED
SEISMIC = NOT CONSIDERED

WALL LOADS DUE TO SOIL:
ABOVE WATER TABLE= 0.065 KSF/FT
BELOW WATER TABLE= 0.0325 KSF/FT

LOADING CONDITIONS:

I EXTREME INUNDATION FOLLOWED BY A RAPID DRAW DOWN EVENT. THE HEIGHT OF RETAINED WATER WAS ASSUMED TO BE 10-FT ABOVE THE WATER LEVEL AT THE TOE. THE ANALYSIS WAS RUN FOR A SERIES OF WATER ELEVATIONS OVER THE HEEL RANGING FROM THE RETAINED GRADE ELEVATION DOWN TO THE TOP OF FOOTING ELEVATION. ONLY THE MOST CRITICAL (WATER ELEVATION OVER HEEL AT 527.0-FT) CASE, WITH RESPECT TO SLIDING, IS PRESENTED IN GRAPHICAL FORM.

## SLIDING STABILITY ANALYSIS

SLIDING ANALYSIS SUMMARY

| LOAD CASE | WATER @ HEEL (FT) | WATER @ TOE (FT) | DRIVING WEDGE (#1) ø | C (KSF) | STRUCTURAL WEDGE (#2) ø | C (KSF) | RESISTING WEDGE (#3) ø | C (KSF) | FS SLIDE |
|---|---|---|---|---|---|---|---|---|---|
| I(a) | 527.0 | 517.0 | 32° | 0.0 | 32° | 0.0 | 32° | 0.0 | 1.36 |
| I(b) | 520.3 | 510.3 | 32° | 0.0 | 32° | 0.0 | 32° | 0.0 | 1.43 |
| I(c) | 513.5 | 503.5 | 32° | 0.0 | 32° | 0.0 | 32° | 0.0 | 1.51 |
| I(d) | 506.8 | 496.8 | 32° | 0.0 | 32° | 0.0 | 32° | 0.0 | 1.61 |
| I(e) | 500.0 | 495.0 | 32° | 0.0 | 32° | 0.0 | 32° | 0.0 | 1.73 |

**NOT FOR CONSTRUCTION**

THIS DOCUMENT IS RELEASED FOR THE PURPOSE OF INTERIM REVIEW UNDER THE AUTHORITY OF JOHN LEE RUTLEDGE P.E. TEXAS NO: 65045 ON DATE: 10/5/2004 IT IS NOT TO BE USED FOR CONSTRUCTION, BIDDING OR PERMIT PURPOSES.

US Army Corps of Engineers
Fort Worth District

| Symbol | Description | O.D. NO. | Action | Date |
|---|---|---|---|---|

Date: JANUARY 2005
Sol No.
Contr No. CDM04188
File name:
Plot date: OCT. 2004
Plot scale: AS SHOWN

Designed by: JLR
Dwn by: CAM
Reviewed by: JLR
Submitted by: NAME TITLE

TARRANT REGIONAL WATER DISTRICT

CDM

FORT WORTH CENTRAL CITY PRELIMINARY DESIGN

**SAMUELS AVENUE DAM DOWNSTREAM TRAINING WALLS @ 527'-0" ROTATIONAL AND SLIDING STABILITY ANALYSES**

SEQUENCE NO.
SS-13

Sheet 130 of 139

DESIGN FILE: ST-DAM-EL-B06

Contr No.

ACAD Rel 16.1s (LMS Tech) User: CAM
[CDM04188]N:\WR\REPORT\ST-DAM-EL-B06.DWG LAYOUT: Layout1
JAN 11, 2005 11:47:30 A.M. LTS: 1.00 PSLTS: 1 TWIST: 0.0
REFERENCE FILE: N:\STANDARD\2521G-BS

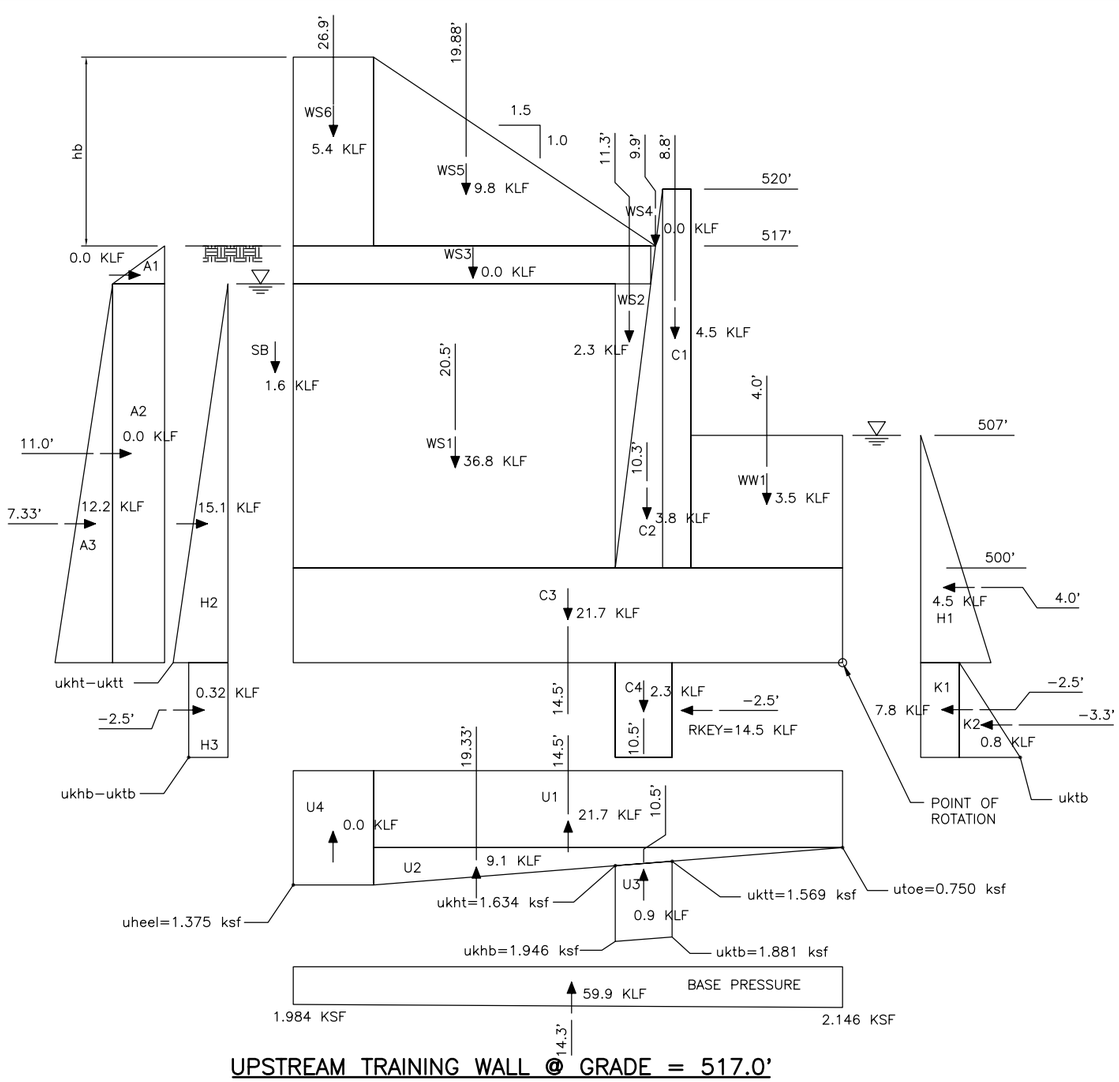


## UPSTREAM TRAINING WALL @ GRADE = 517.0'

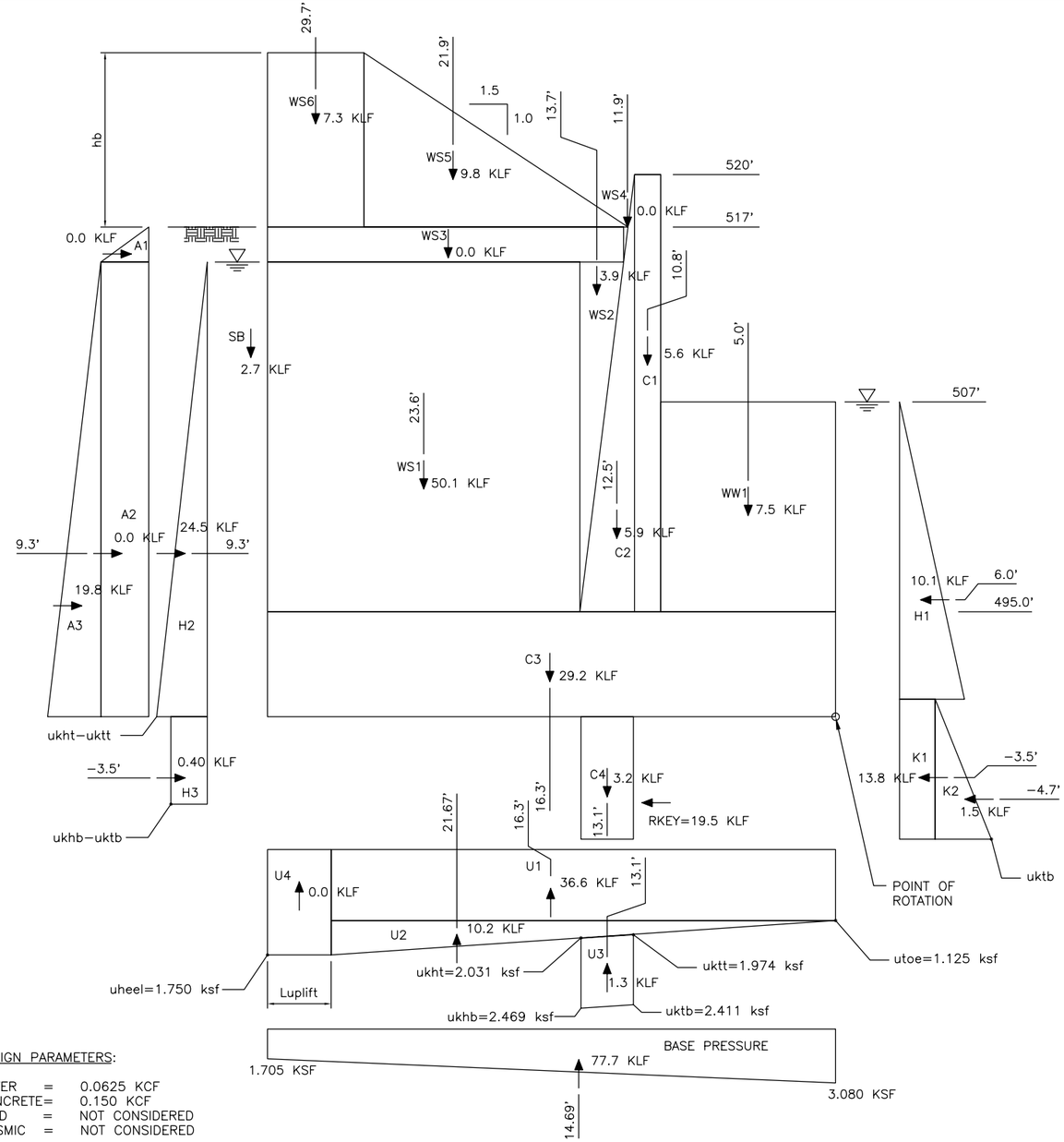


## DOWNSTREAM TRAINING WALL @ GRADE = 517.0'

ANALYSIS SUMMARY

| LOAD CASE | WATER @ HEEL (FT) | WATER @ TOE (FT) | FX TOTAL (KLF) | FY TOTAL (KLF) | FZ TOTAL (KLF) | e (FT) | FS SLIDE | BASE IN COMPRESSION (%) | BEARING PRESSURE (KSF) | | |
|---|---|---|---|---|---|---|---|---|---|---|---|
| | | | | | | | | | HEEL | TOE | FS |
| I(a) | 517.0 | 507.0 | 14.5 | 0.0 | 59.9 | 0.19 | SEE SHT SS−15 | 100.0 | 1.984 | 2.146 | 18.06 |
| I(b) | 514.0 | 504.0 | 16.7 | 0.0 | 64.4 | −0.08 | SEE SHT SS−15 | 100.0 | 2.258 | 2.182 | 17.81 |
| I(c) | 511.0 | 501.0 | 18.4 | 0.0 | 68.6 | −0.32 | SEE SHT SS−15 | 100.0 | 2.520 | 2.210 | 17.47 |
| I(d) | 508.0 | 500.0 | 19.3 | 0.0 | 71.7 | −0.52 | SEE SHT SS−15 | 100.0 | 2.735 | 2.207 | 16.33 |
| I(e) | 505.0 | 500.0 | 20.0 | 0.0 | 74.0 | −0.64 | SEE SHT SS−15 | 100.0 | 2.890 | 2.215 | 15.40 |

LEGEND:

FX = SUM OF ALL HORIZONTAL FORCES IN THE GLOBAL X DIRECTION (POSITIVE TOWARD CHANNEL) CONSIDERING ANY UPLIFT EFFECTS BUT WITHOUT SHEAR KEY RESISTANCE.

FY = SUM OF ALL HORIZONTAL FORCES IN THE GLOBAL Y DIRECTION CONSIDERING ANY UPLIFT EFFECTS

FZ = SUM OF ALL VERTICAL FORCES IN THE GLOBAL Z DIRECTION (POSITIVE DOWNWARD) CONSIDERING ANY UPLIFT EFFECTS

e = DISTANCE BETWEEN RESULTANT AND CENTROID OF BASE CONSIDERING ANY UPLIFT EFFECTS

FS = FACTOR OF SAFETY FOR SLIDING STABILITY

DESIGN PARAMETERS:

WATER = 0.0625 KCF
CONCRETE= 0.150 KCF
WIND = NOT CONSIDERED
SEISMIC = NOT CONSIDERED

WALL LOADS DUE TO SOIL:
ABOVE WATER TABLE= 0.065 KSF/FT
BELOW WATER TABLE= 0.0325 KSF/FT

LOADING CONDITIONS:

I EXTREME INUNDATION FOLLOWED BY A RAPID DRAW DOWN EVENT. THE HEIGHT OF RETAINED WATER WAS ASSUMED TO BE 10−FT ABOVE THE WATER LEVEL AT THE TOE. THE ANALYSIS WAS RUN FOR A SERIES OF WATER ELEVATIONS OVER THE HEEL RANGING FROM THE RETAINED GRADE ELEVATION DOWN TO THE TOP OF FOOTING ELEVATION. ONLY THE MOST CRITICAL (WATER ELEVATION OVER HEEL AT 517.0−FT) CASE, WITH RESPECT TO SLIDING IS PRESENTED IN GRAPHICAL FORM.

ANALYSIS SUMMARY

| LOAD CASE | WATER @ HEEL (FT) | WATER @ TOE (FT) | FX TOTAL (KLF) | FY TOTAL (KLF) | FZ TOTAL (KLF) | e (FT) | FS SLIDE | BASE IN COMPRESSION (%) | BEARING PRESSURE (KSF) | | |
|---|---|---|---|---|---|---|---|---|---|---|---|
| | | | | | | | | | HEEL | TOE | FS |
| I(a) | 517.0 | 507.0 | 19.5 | 0.0 | 77.7 | 1.56 | SEE SHT SS−16 | 100.0 | 1.705 | 3.080 | 11.08 |
| I(b) | 512.8 | 502.8 | 24.3 | 0.0 | 84.7 | 1.23 | SEE SHT SS−16 | 100.0 | 2.012 | 3.199 | 10.73 |
| I(c) | 508.5 | 498.5 | 28.1 | 0.0 | 91.0 | 0.93 | SEE SHT SS−16 | 100.0 | 2.322 | 3.278 | 10.52 |
| I(d) | 504.3 | 495.0 | 30.9 | 0.0 | 96.4 | 0.66 | SEE SHT SS−16 | 100.0 | 2.606 | 3.328 | 10.41 |
| I(e) | 500.0 | 495.0 | 32.4 | 0.0 | 99.9 | 0.50 | SEE SHT SS−16 | 100.0 | 2.791 | 3.354 | 10.35 |

**NOT FOR CONSTRUCTION**

THIS DOCUMENT IS RELEASED FOR THE PURPOSE OF INTERIM REVIEW UNDER THE AUTHORITY OF JOHN LEE RUTLEDGE P.E. TEXAS NO: 65045 ON DATE: 10/5/2004 IT IS NOT TO BE USED FOR CONSTRUCTION, BIDDING OR PERMIT PURPOSES.

US Army Corps of Engineers
Fort Worth District

| Symbol | Description | D.O. NO. | Action | Date |
|---|---|---|---|---|

Designed by: JLR
Dwn by: CAM
Reviewed by: JLR
Submitted by: NAME TITLE
Date: JANUARY 2005
Sol No.
Contr. No. CDM04188
File name:
Plot date: OCT. 2004
Plot scale: AS SHOWN

TARRANT REGIONAL WATER DISTRICT

CDM

FORT WORTH CENTRAL CITY PRELIMINARY DESIGN

**SAMUELS AVENUE DAM TRAINING WALLS @ 517'-0" ROTATIONAL STABILITY ANALYSES**

SEQUENCE NO.
SS−14

Sheet 131 of 139

DESIGN FILE: ST−DAM−EL−B07

Contr No.

ACAD Rel 16.1s (LMS Tech) User: CAM
[CDM04188]N:\WR\REPORT\ST−DAM−EL−B07.DWG LAYOUT: Layout1
JAN 11, 2005 1:20:11 P.M. LTS: 1.00 PSLTS: 1 TWIST: 0.0
REFERENCE FILE: N:\STANDARD\2521G−BS

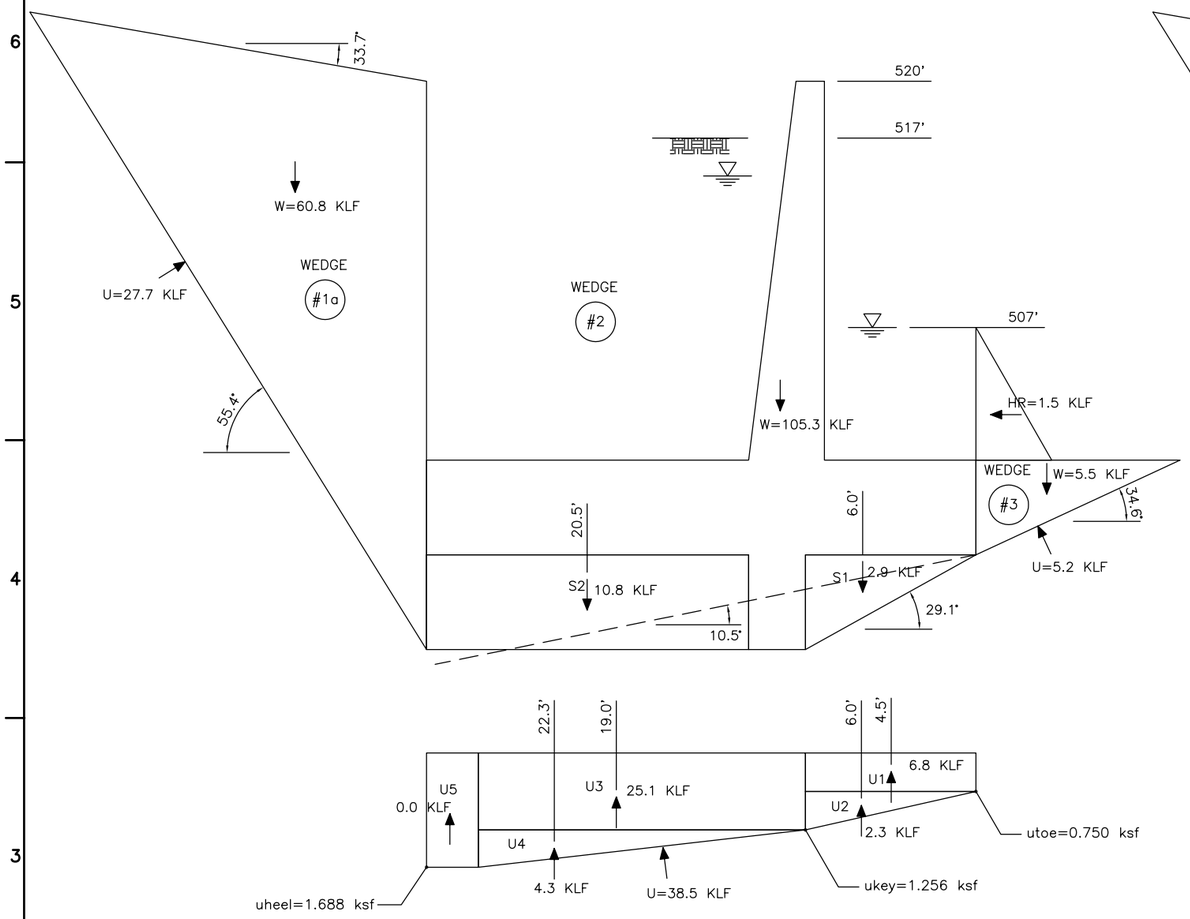


## SLIDING ANALYSIS #1

ANALYSIS SUMMARY

| LOAD CASE | WATER @ HEEL (FT) | WATER @ TOE (FT) | DRIVING WEDGE (#1) | | STRUCTURAL WEDGE (#2) | | RESISTING WEDGE (#3) | | FS SLIDE |
|---|---|---|---|---|---|---|---|---|---|
| | | | ø | C (KSF) | ø | C (KSF) | ø | C (KSF) | |
| I(a) | 517.0 | 507.0 | 32° | 0.0 | 32° | 0.0 | 32° | 0.0 | 1.65 |
| I(b) | 514.0 | 504.0 | 32° | 0.0 | 32° | 0.0 | 32° | 0.0 | 1.72 |
| I(c) | 511.0 | 501.0 | 32° | 0.0 | 32° | 0.0 | 32° | 0.0 | 1.78 |
| I(d) | 508.0 | 500.0 | 32° | 0.0 | 32° | 0.0 | 32° | 0.0 | 1.86 |
| I(e) | 505.0 | 500.0 | 32° | 0.0 | 32° | 0.0 | 32° | 0.0 | 1.93 |

NOTE: REFER TO SHEET SS-14 FOR ADDITIONAL DESIGN PARAMETERS AND LOAD DESCRIPTIONS

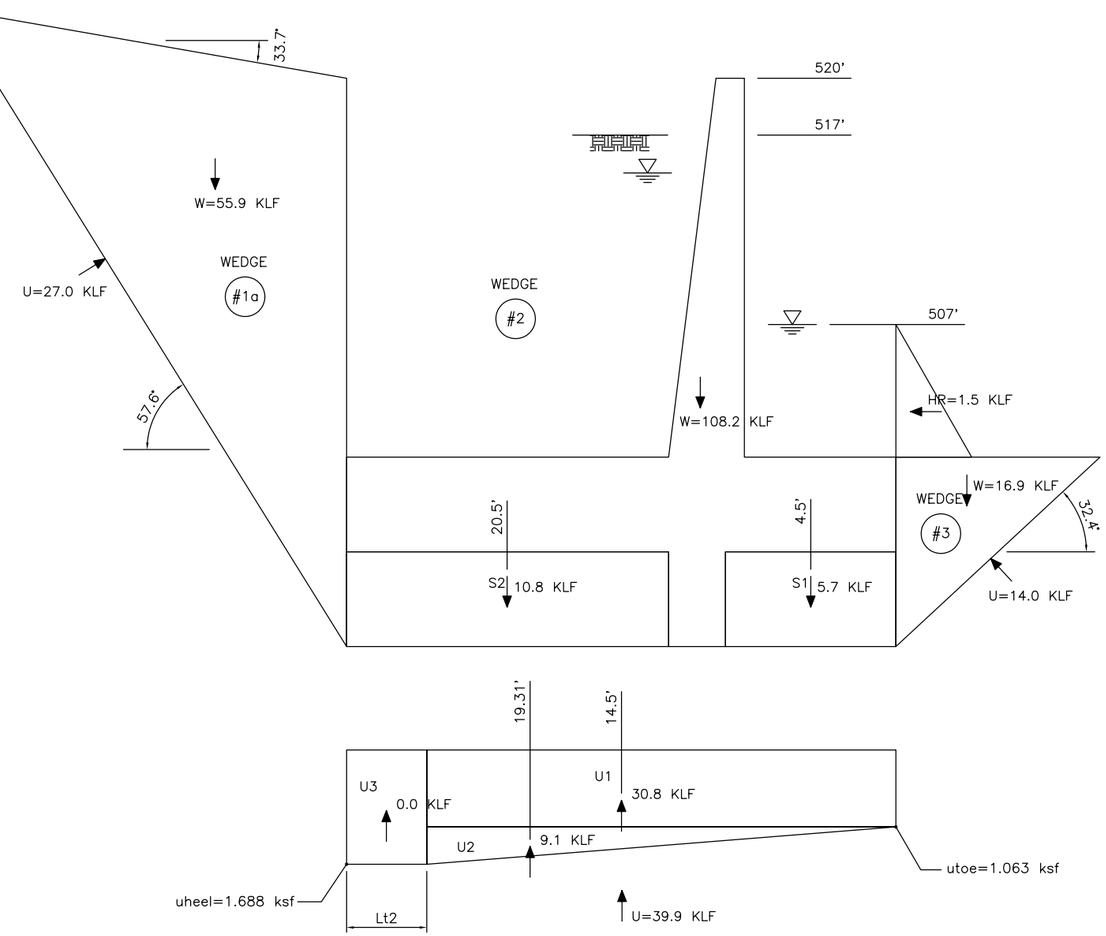


## SLIDING ANALYSIS #2

ANALYSIS SUMMARY

| LOAD CASE | WATER @ HEEL (FT) | WATER @ TOE (FT) | DRIVING WEDGE (#1) | | STRUCTURAL WEDGE (#2) | | RESISTING WEDGE (#3) | | FS SLIDE |
|---|---|---|---|---|---|---|---|---|---|
| | | | ø | C (KSF) | ø | C (KSF) | ø | C (KSF) | |
| I(a) | 517.0 | 507.0 | 32° | 0.0 | 32° | 0.0 | 32° | 0.0 | 1.33 |
| I(b) | 514.0 | 504.0 | 32° | 0.0 | 32° | 0.0 | 32° | 0.0 | 1.37 |
| I(c) | 511.0 | 501.0 | 32° | 0.0 | 32° | 0.0 | 32° | 0.0 | 1.41 |
| I(d) | 508.0 | 500.0 | 32° | 0.0 | 32° | 0.0 | 32° | 0.0 | 1.47 |
| I(e) | 505.0 | 500.0 | 32° | 0.0 | 32° | 0.0 | 32° | 0.0 | 1.53 |

NOTE: REFER TO SHEET SS-14 FOR ADDITIONAL DESIGN PARAMETERS AND LOAD DESCRIPTIONS

**NOT FOR CONSTRUCTION**

THIS DOCUMENT IS RELEASED FOR THE PURPOSE OF INTERIM REVIEW UNDER THE AUTHORITY OF JOHN LEE RUTLEDGE P.E. TEXAS NO: 65045 ON DATE: 10/5/2004 IT IS NOT TO BE USED FOR CONSTRUCTION, BIDDING OR PERMIT PURPOSES.

US Army Corps of Engineers
Fort Worth District

| Symbol | Description | U.O. NO. | Action | Date |
|---|---|---|---|---|

Date: JANUARY 2005
Sol No.
Contr. No. CDM04188
File name:
Plot date: OCT. 2004
Plot scale: AS SHOWN

Designed by: JLR
Dwn by: CAM
Reviewed by: JLR
Submitted by: NAME TITLE

TARRANT REGIONAL WATER DISTRICT

CDM

FORT WORTH CENTRAL CITY PRELIMINARY DESIGN
SAMUELS AVENUE DAM
UPSTREAM TRAINING WALLS @ 517'-0" - SLIDING STABILITY ANALYSES

SEQUENCE NO.
SS-15

Sheet 132 of 139

DESIGN FILE: ST-DAM-EL-B08

Contr No.

ACAD Rel 16.1s (LMS tech) User: CAM
[CDM04188]N:\WR\REPORT\ST-DAM-EL-B08.DWG LAYOUT: Layout1
JAN 11, 2005 2:10:48 P.M. LTS: 1.00 PSLTS: 1 TWIST: 0.0
REFERENCE FILE: N:\STANDARD\25210-BS

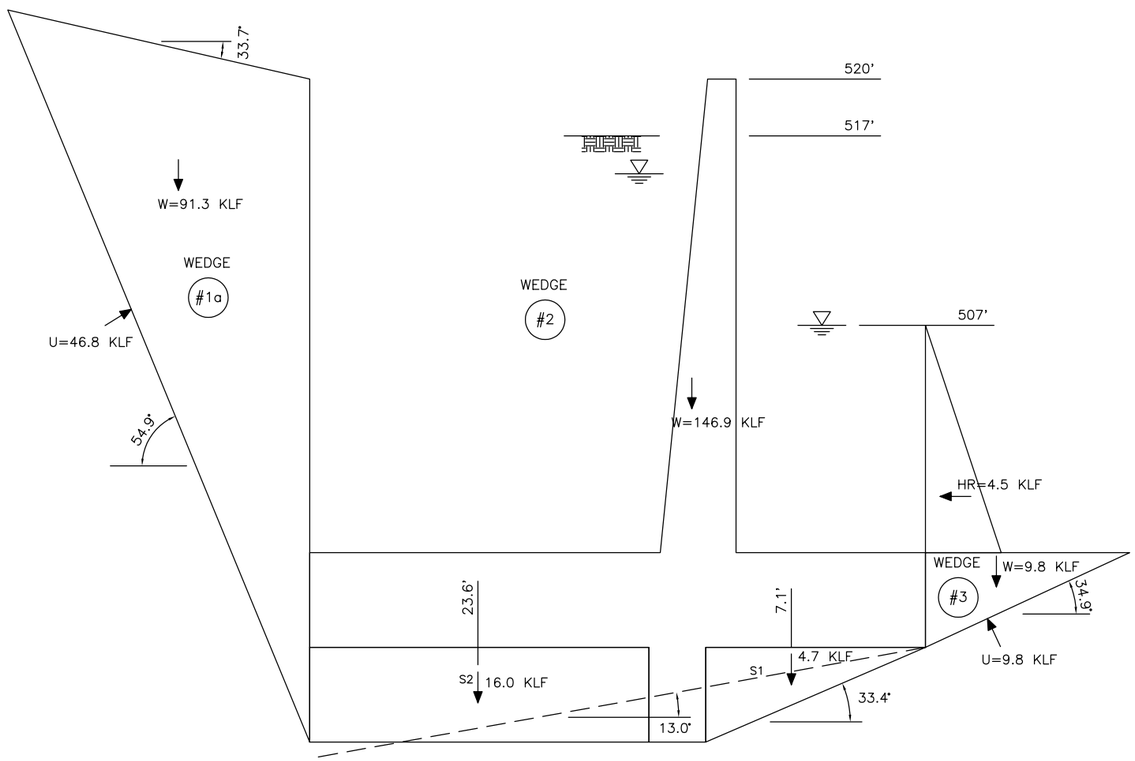


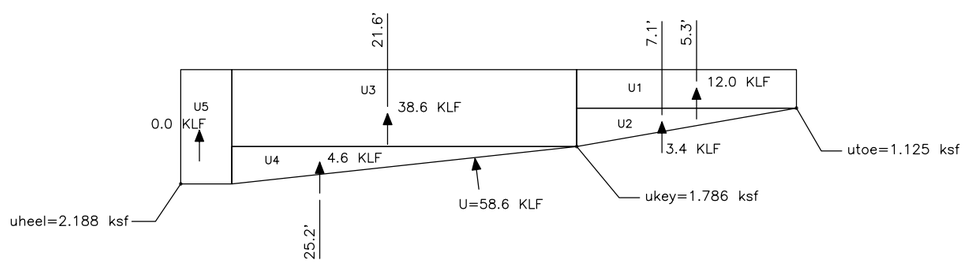


## SLIDING ANALYSIS #1

ANALYSIS SUMMARY

| LOAD CASE | WATER @ HEEL (FT) | WATER @ TOE (FT) | DRIVING WEDGE (#1) | | STRUCTURAL WEDGE (#2) | | RESISTING WEDGE (#3) | | FS SLIDE |
|---|---|---|---|---|---|---|---|---|---|
| | | | ø | C (KSF) | ø | C (KSF) | ø | C (KSF) | |
| I(a) | 517.0 | 507.0 | 32° | 0.0 | 32° | 0.0 | 32° | 0.0 | 1.73 |
| I(b) | 512.8 | 502.8 | 32° | 0.0 | 32° | 0.0 | 32° | 0.0 | 1.78 |
| I(c) | 508.5 | 498.5 | 32° | 0.0 | 32° | 0.0 | 32° | 0.0 | 1.84 |
| I(d) | 504.3 | 495.0 | 32° | 0.0 | 32° | 0.0 | 32° | 0.0 | 1.90 |
| I(e) | 500.0 | 495.0 | 32° | 0.0 | 32° | 0.0 | 32° | 0.0 | 1.98 |

NOTE: REFER TO SHEET SS-14 FOR ADDITIONAL DESIGN PARAMETERS AND LOAD DESCRIPTIONS

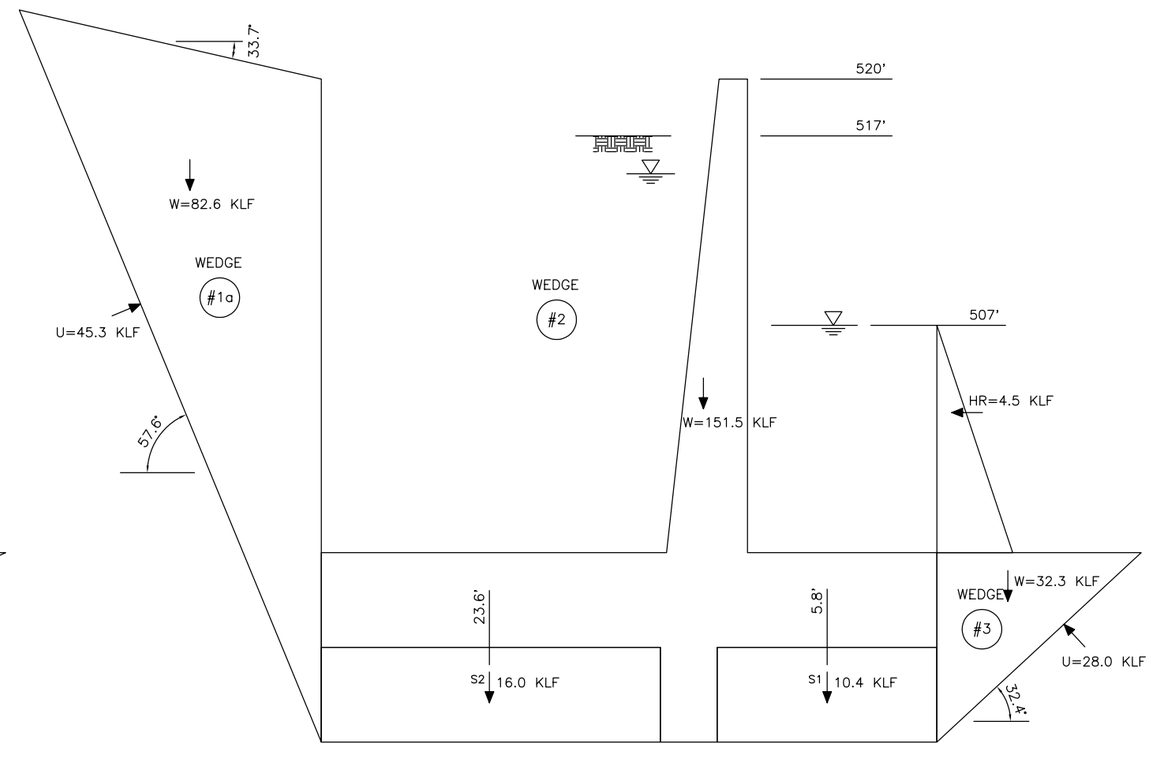


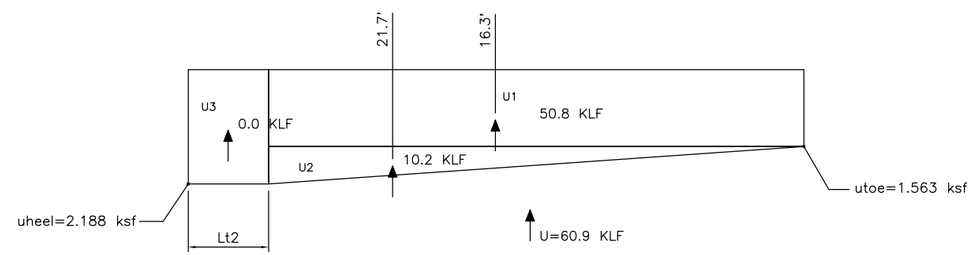


## SLIDING ANALYSIS #2

ANALYSIS SUMMARY

| LOAD CASE | WATER @ HEEL (FT) | WATER @ TOE (FT) | DRIVING WEDGE (#1) | | STRUCTURAL WEDGE (#2) | | RESISTING WEDGE (#3) | | FS SLIDE |
|---|---|---|---|---|---|---|---|---|---|
| | | | ø | C (KSF) | ø | C (KSF) | ø | C (KSF) | |
| I(a) | 517.0 | 507.0 | 32° | 0.0 | 32° | 0.0 | 32° | 0.0 | 1.33 |
| I(b) | 512.8 | 502.8 | 32° | 0.0 | 32° | 0.0 | 32° | 0.0 | 1.36 |
| I(c) | 508.5 | 498.5 | 32° | 0.0 | 32° | 0.0 | 32° | 0.0 | 1.40 |
| I(d) | 504.3 | 495.0 | 32° | 0.0 | 32° | 0.0 | 32° | 0.0 | 1.44 |
| I(e) | 500.0 | 495.0 | 32° | 0.0 | 32° | 0.0 | 32° | 0.0 | 1.51 |

NOTE: REFER TO SHEET SS-14 FOR ADDITIONAL DESIGN PARAMETERS AND LOAD DESCRIPTIONS

**NOT FOR CONSTRUCTION**

THIS DOCUMENT IS RELEASED FOR THE PURPOSE OF INTERIM REVIEW UNDER THE AUTHORITY OF JOHN LEE RUTLEDGE P.E. TEXAS NO: 65045 ON DATE: 10/5/2004 IT IS NOT TO BE USED FOR CONSTRUCTION, BIDDING OR PERMIT PURPOSES.

US Army Corps of Engineers
Fort Worth District

| Symbol | Description | D.O. NO. | Action | Date |
|---|---|---|---|---|

Date: JANUARY 2005
Sol No.
Contr. No. CDM04188
File name:
Plot date: OCT. 2004
Plot scale: AS SHOWN

Designed by: JLR
Dwn by: CAM
Reviewed by: JLR
Submitted by: NAME TITLE

TARRANT REGIONAL WATER DISTRICT

CDM

FORT WORTH CENTRAL CITY
PRELIMINARY DESIGN
SAMUELS AVENUE DAM
DOWNSTREAM TRAINING WALLS
@ 517'-0" - SLIDING STABILITY
ANALYSES

SEQUENCE NO.
SS-16



DESIGN FILE: ST-DAM-EL-B09

Contr. No.

ACAD Rel 16.1s (LMS Tech) User: CAM
[CDM04188]N:\WR\REPORT\ST-DAM-EL-B09.DWG LAYOUT: Layout1
JAN 11, 2005 2:17:23 P.M. LTS: 1.00 PSLTS: 1 TWIST: 0.0
REFERENCE FILE: N:\STANDARD\2521G-BS

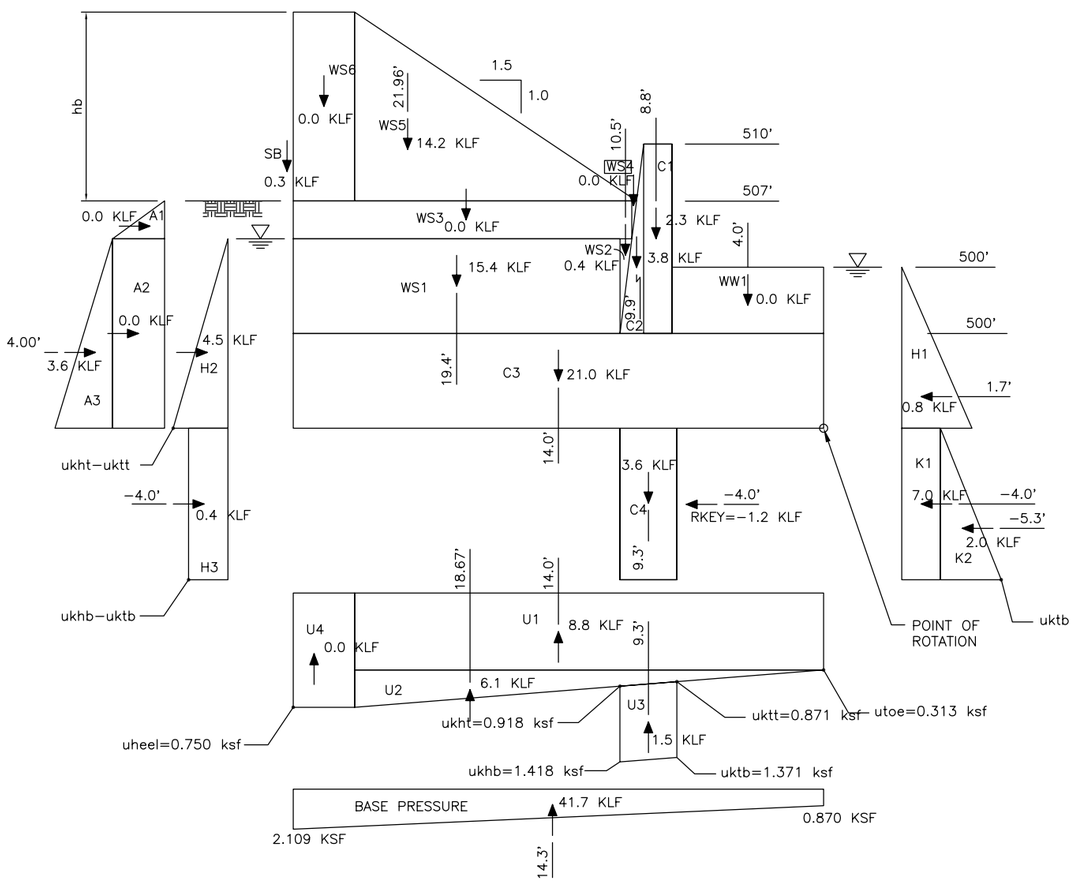


## UPSTREAM TRAINING WALL @ GRADE = 507.0'

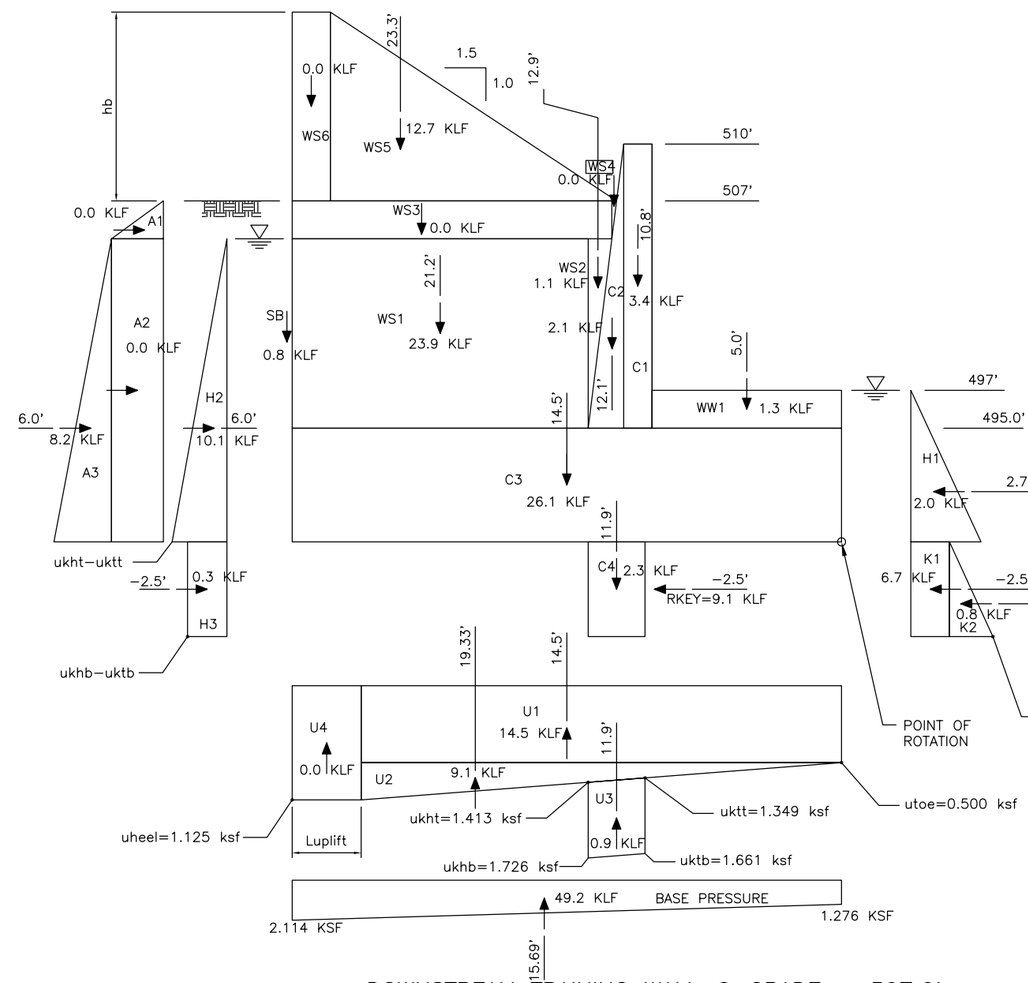


## DOWNSTREAM TRAINING WALL @ GRADE = 507.0'

ANALYSIS SUMMARY

| LOAD CASE | WATER @ HEEL (FT) | WATER @ TOE (FT) | FX TOTAL (KLF) | FY TOTAL (KLF) | FZ TOTAL (KLF) | e (FT) | FS SLIDE | BASE IN COMPRESSION (%) | BEARING PRESSURE (KSF) | | |
|---|---|---|---|---|---|---|---|---|---|---|---|
| | | | | | | | | | HEEL | TOE | FS |
| I(a) | 507.0 | 500.0 | −1.2 | 0.0 | 41.7 | −1.94 | SEE SHT SS−18 | 100.0 | 2.109 | 0.870 | 40.28 |
| I(b) | 506.5 | 500.0 | −1.0 | 0.0 | 42.2 | −2.00 | SEE SHT SS−18 | 100.0 | 2.153 | 0.862 | 39.36 |
| I(c) | 506.0 | 500.0 | −0.8 | 0.0 | 42.7 | −2.05 | SEE SHT SS−18 | 100.0 | 2.194 | 0.855 | 38.52 |
| I(d) | 505.5 | 500.0 | −0.6 | 0.0 | 43.2 | −2.10 | SEE SHT SS−18 | 100.0 | 2.234 | 0.849 | 37.74 |
| I(e) | 505.0 | 500.0 | −0.3 | 0.0 | 43.6 | −2.14 | SEE SHT SS−18 | 100.0 | 2.273 | 0.844 | 37.03 |

LEGEND:

FX = SUM OF ALL HORIZONTAL FORCES IN THE GLOBAL X DIRECTION (POSITIVE TOWARD CHANNEL) CONSIDERING ANY UPLIFT EFFECTS BUT WITHOUT SHEAR KEY RESISTANCE.

FY = SUM OF ALL HORIZONTAL FORCES IN THE GLOBAL Y DIRECTION CONSIDERING ANY UPLIFT EFFECTS

FZ = SUM OF ALL VERTICAL FORCES IN THE GLOBAL Z DIRECTION (POSITIVE DOWNWARD) CONSIDERING ANY UPLIFT EFFECTS

e = DISTANCE BETWEEN RESULTANT AND CENTROID OF BASE CONSIDERING ANY UPLIFT EFFECTS

FS = FACTOR OF SAFETY FOR SLIDING STABILITY

DESIGN PARAMETERS:

WATER = 0.0625 KCF
CONCRETE= 0.150 KCF
WIND = NOT CONSIDERED
SEISMIC = NOT CONSIDERED

WALL LOADS DUE TO SOIL:
ABOVE WATER TABLE= 0.065 KSF/FT
BELOW WATER TABLE= 0.0325 KSF/FT

LOADING CONDITIONS:

I EXTREME INUNDATION FOLLOWED BY A RAPID DRAW DOWN EVENT. THE HEIGHT OF RETAINED WATER WAS ASSUMED TO BE 10−FT ABOVE THE WATER LEVEL AT THE TOE. THE ANALYSIS WAS RUN FOR A SERIES OF WATER ELEVATIONS OVER THE HEEL RANGING FROM THE RETAINED GRADE ELEVATION DOWN TO THE TOP OF FOOTING ELEVATION. ONLY THE MOST CRITICAL (WATER ELEVATION OVER HEEL AT 507.0−FT) CASE, WITH RESPECT TO SLIDING IS PRESENTED IN GRAPHICAL FORM.

ANALYSIS SUMMARY

| LOAD CASE | WATER @ HEEL (FT) | WATER @ TOE (FT) | FX TOTAL (KLF) | FY TOTAL (KLF) | FZ TOTAL (KLF) | e (FT) | FS SLIDE | BASE IN COMPRESSION (%) | BEARING PRESSURE (KSF) | | |
|---|---|---|---|---|---|---|---|---|---|---|---|
| | | | | | | | | | HEEL | TOE | FS |
| I(a) | 507.0 | 497.0 | 9.1 | 0.0 | 49.2 | −1.19 | SEE SHT SS−19 | 100.0 | 2.114 | 1.276 | 28.82 |
| I(b) | 505.3 | 495.3 | 10.1 | 0.0 | 51.5 | −1.39 | SEE SHT SS−19 | 100.0 | 2.285 | 1.266 | 26.50 |
| I(c) | 503.5 | 495.0 | 10.5 | 0.0 | 53.3 | −1.57 | SEE SHT SS−19 | 100.0 | 2.436 | 1.240 | 24.71 |
| I(d) | 501.8 | 495.0 | 10.9 | 0.0 | 54.9 | −1.72 | SEE SHT SS−19 | 100.0 | 2.567 | 1.221 | 23.35 |
| I(e) | 500.0 | 495.0 | 11.4 | 0.0 | 56.5 | −1.82 | SEE SHT SS−19 | 100.0 | 2.680 | 1.214 | 22.30 |

**NOT FOR CONSTRUCTION**

THIS DOCUMENT IS RELEASED FOR THE PURPOSE OF INTERIM REVIEW UNDER THE AUTHORITY OF JOHN LEE RUTLEDGE P.E. TEXAS NO: 65045 ON DATE: 10/5/2004 IT IS NOT TO BE USED FOR CONSTRUCTION, BIDDING OR PERMIT PURPOSES.

US Army Corps of Engineers
Fort Worth District

| Symbol | Description | O.D. NO. | Action | Date |
|---|---|---|---|---|

Designed by: JLR
Dwn by: CAM
Reviewed by: JLR
Submitted by: NAME TITLE
Date: JANUARY 2005
Sol No.
Contr No. CDM04188
File name:
Plot date: OCT. 2004
Plot scale: AS SHOWN

TARRANT REGIONAL WATER DISTRICT

CDM

FORT WORTH CENTRAL CITY PRELIMINARY DESIGN

**SAMUELS AVENUE DAM TRAINING WALLS @ 507'-0" ROTATIONAL STABILITY ANALYSES**

SEQUENCE NO.
SS−17



DESIGN FILE: ST−DAM−EL−B10

Contr No.

ACAD Rel 16.1s (LMS Tech) User: CAM
[CDM04188]N:\WR\REPORT\ST−DAM−EL−B10.DWG LAYOUT: Layout1
JAN 11, 2005 2:27:45 P.M. LTS: 1.00 PSLTS: 1 TWIST: 0.0
REFERENCE FILE: N:\STANDARD\25210−BS

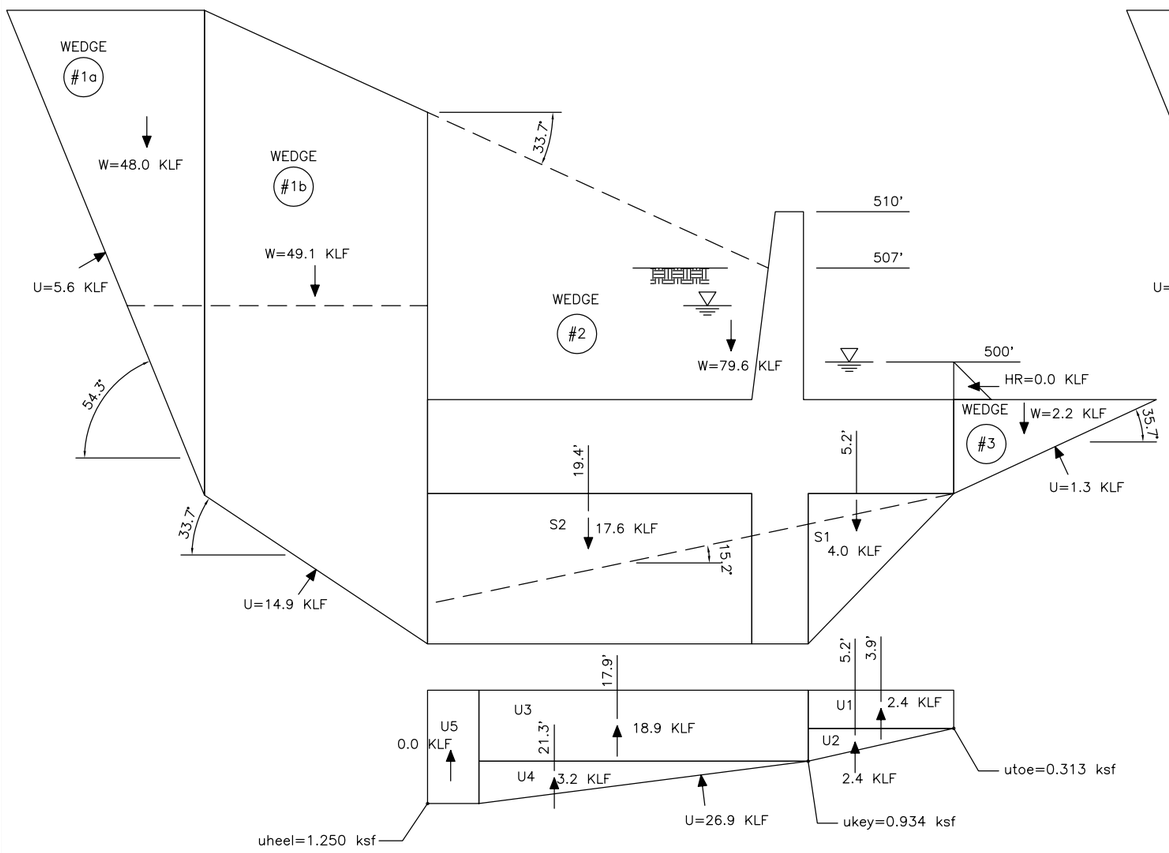


## SLIDING ANALYSIS #1

ANALYSIS SUMMARY

| LOAD CASE | WATER @ HEEL (FT) | WATER @ TOE (FT) | DRIVING WEDGE (#1) | | STRUCTURAL WEDGE (#2) | | RESISTING WEDGE (#3) | | FS SLIDE |
|---|---|---|---|---|---|---|---|---|---|
| | | | ø | C (KSF) | ø | C (KSF) | ø | C (KSF) | |
| I(a) | 507.0 | 500.0 | 32° | 0.0 | 32° | 0.0 | 32° | 0.0 | 1.86 |
| I(b) | 506.5 | 500.0 | 32° | 0.0 | 32° | 0.0 | 32° | 0.0 | 1.89 |
| I(c) | 506.0 | 500.0 | 32° | 0.0 | 32° | 0.0 | 32° | 0.0 | 1.92 |
| I(d) | 505.5 | 500.0 | 32° | 0.0 | 32° | 0.0 | 32° | 0.0 | 1.95 |
| I(e) | 505.0 | 500.0 | 32° | 0.0 | 32° | 0.0 | 32° | 0.0 | 1.98 |

NOTE: REFER TO SHEET SS-17 FOR ADDITIONAL DESIGN PARAMETERS AND LOAD DESCRIPTIONS

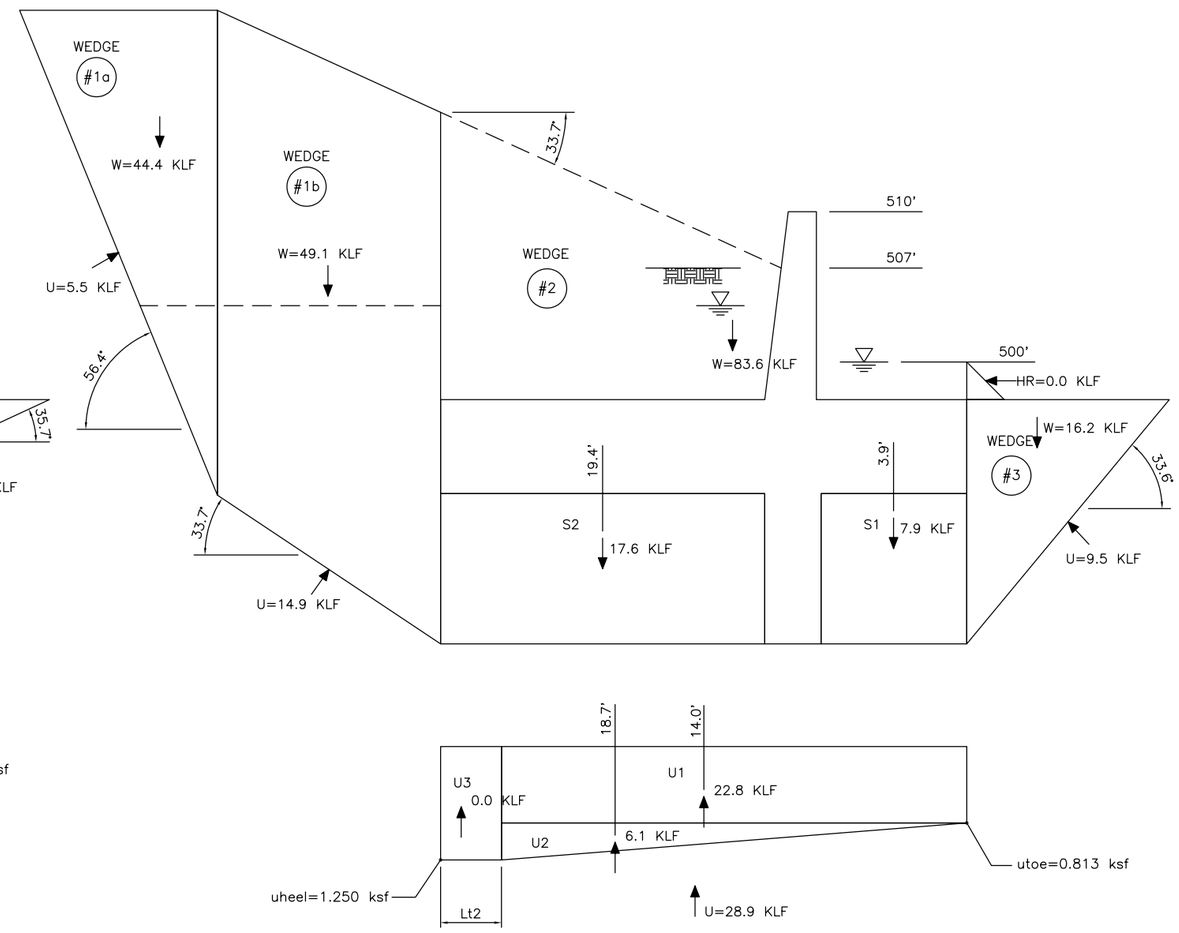


## SLIDING ANALYSIS #2

ANALYSIS SUMMARY

| LOAD CASE | WATER @ HEEL (FT) | WATER @ TOE (FT) | DRIVING WEDGE (#1) | | STRUCTURAL WEDGE (#2) | | RESISTING WEDGE (#3) | | FS SLIDE |
|---|---|---|---|---|---|---|---|---|---|
| | | | ø | C (KSF) | ø | C (KSF) | ø | C (KSF) | |
| I(a) | 507.0 | 500.0 | 32° | 0.0 | 32° | 0.0 | 32° | 0.0 | 1.49 |
| I(b) | 506.5 | 500.0 | 32° | 0.0 | 32° | 0.0 | 32° | 0.0 | 1.51 |
| I(c) | 506.0 | 500.0 | 32° | 0.0 | 32° | 0.0 | 32° | 0.0 | 1.53 |
| I(d) | 505.5 | 500.0 | 32° | 0.0 | 32° | 0.0 | 32° | 0.0 | 1.55 |
| I(e) | 505.0 | 500.0 | 32° | 0.0 | 32° | 0.0 | 32° | 0.0 | 1.57 |

NOTE: REFER TO SHEET SS-17 FOR ADDITIONAL DESIGN PARAMETERS AND LOAD DESCRIPTIONS

**NOT FOR CONSTRUCTION**

THIS DOCUMENT IS RELEASED FOR THE PURPOSE OF INTERIM REVIEW UNDER THE AUTHORITY OF JOHN LEE RUTLEDGE P.E. TEXAS NO: 65045 ON DATE: 10/5/2004 IT IS NOT TO BE USED FOR CONSTRUCTION, BIDDING OR PERMIT PURPOSES.

US Army Corps of Engineers
Fort Worth District

| Symbol | Description | U.O. NO. | Action | Date |
|---|---|---|---|---|

Designed by: JLR
Dwn by: CAM
Reviewed by: JLR
Submitted by: NAME TITLE
Date: JANUARY 2005
Sol No.
Contr No. CDM04188
File name:
Plot date: OCT. 2004
Plot scale: AS SHOWN

TARRANT REGIONAL WATER DISTRICT

CDM

FORT WORTH CENTRAL CITY
PRELIMINARY DESIGN
**SAMUELS AVENUE DAM**
**UPSTREAM TRAINING WALLS**
**@ 507'-0" - SLIDING STABILITY ANALYSES**

SEQUENCE NO.
SS-18



DESIGN FILE: ST-DAM-EL-B11

Contr No.

ACAD Rel 16.1s (LMS Tech) User: CAM
[CDM04188]N:\WR\REPORT\ST-DAM-EL-B11.DWG LAYOUT: Layout1
JAN 11, 2005 2:40:31 P.M. LTS: 1.00 PSLTS: 1 TWIST: 0.0
REFERENCE FILE: N:\STANDARD\2521G-BS

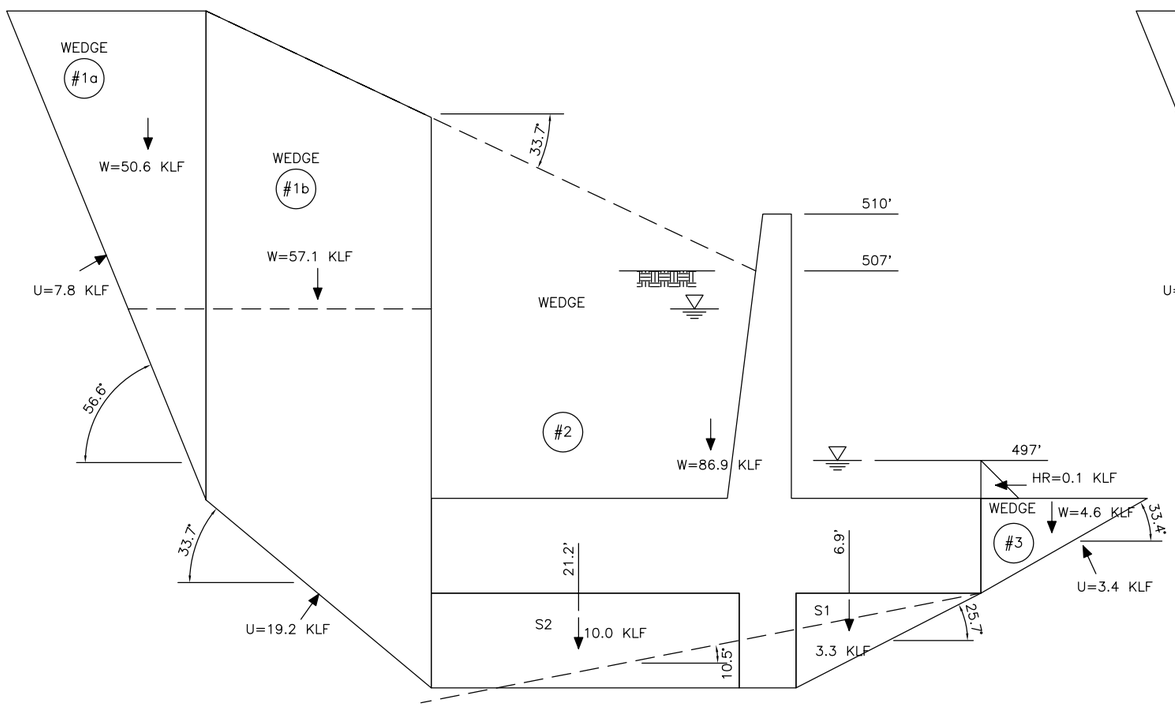


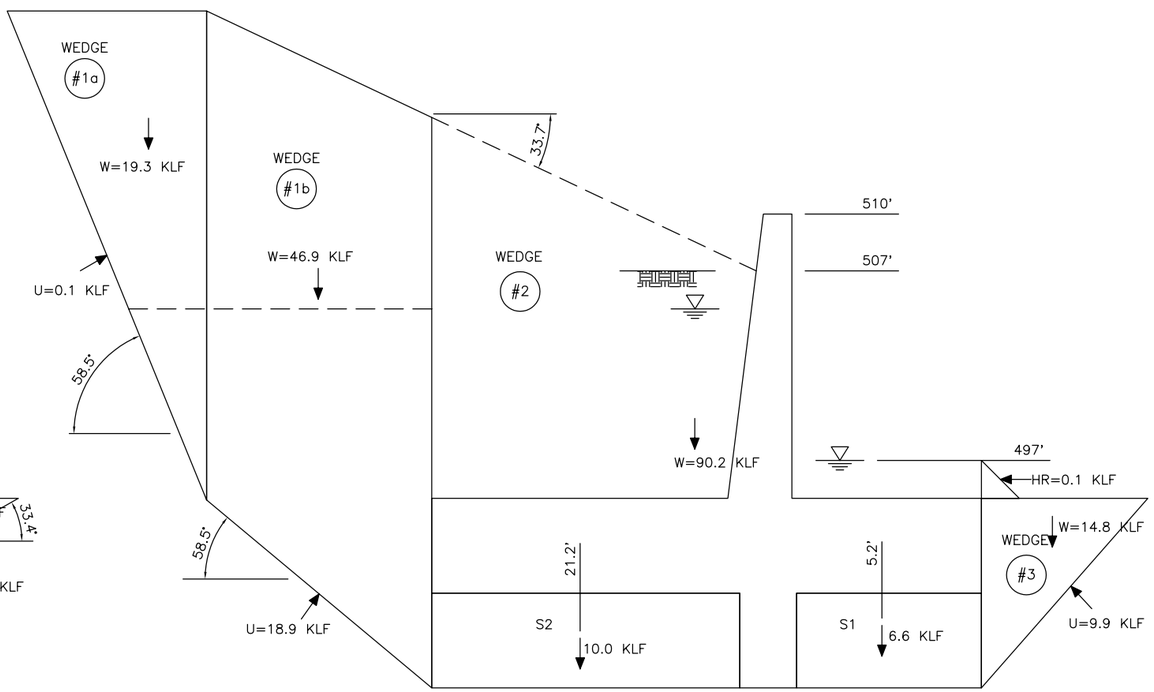


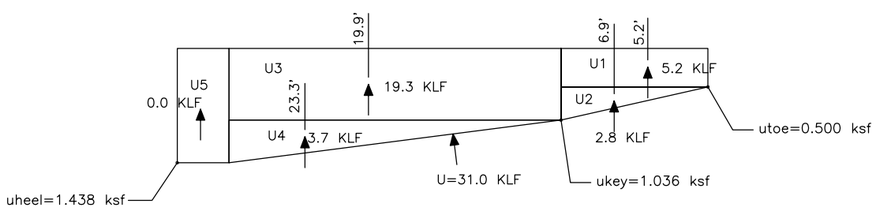


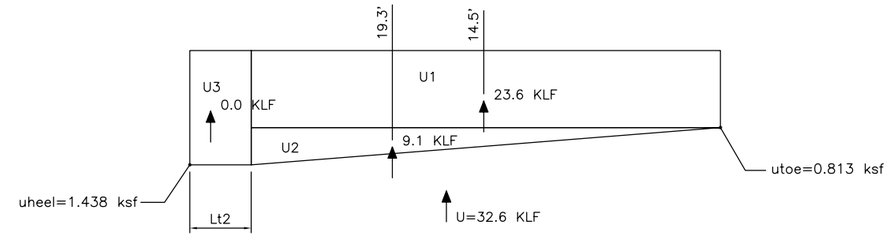


ANALYSIS SUMMARY

| LOAD CASE | WATER @ HEEL (FT) | WATER @ TOE (FT) | DRIVING WEDGE (#1) | | STRUCTURAL WEDGE (#2) | | RESISTING WEDGE (#3) | | FS SLIDE |
|---|---|---|---|---|---|---|---|---|---|
| | | | ø | C (KSF) | ø | C (KSF) | ø | C (KSF) | |
| I(a) | 507.0 | 497.0 | 32° | 0.0 | 32° | 0.0 | 32° | 0.0 | 1.46 |
| I(b) | 505.3 | 495.3 | 32° | 0.0 | 32° | 0.0 | 32° | 0.0 | 1.52 |
| I(c) | 503.5 | 495.0 | 32° | 0.0 | 32° | 0.0 | 32° | 0.0 | 1.59 |
| I(d) | 501.8 | 495.0 | 32° | 0.0 | 32° | 0.0 | 32° | 0.0 | 1.67 |
| I(e) | 500.0 | 495.0 | 32° | 0.0 | 32° | 0.0 | 32° | 0.0 | 1.74 |

NOTE: REFER TO SHEET B17 FOR ADDITIONAL DESIGN PARAMETERS AND LOAD DESCRIPTIONS

ANALYSIS SUMMARY

| LOAD CASE | WATER @ HEEL (FT) | WATER @ TOE (FT) | DRIVING WEDGE (#1) | | STRUCTURAL WEDGE (#2) | | RESISTING WEDGE (#3) | | FS SLIDE |
|---|---|---|---|---|---|---|---|---|---|
| | | | ø | C (KSF) | ø | C (KSF) | ø | C (KSF) | |
| I(a) | 507.0 | 497.0 | 32° | 0.0 | 32° | 0.0 | 32° | 0.0 | 1.23 |
| I(b) | 505.3 | 495.3 | 32° | 0.0 | 32° | 0.0 | 32° | 0.0 | 1.26 |
| I(c) | 503.5 | 495.0 | 32° | 0.0 | 32° | 0.0 | 32° | 0.0 | 1.31 |
| I(d) | 501.8 | 495.0 | 32° | 0.0 | 32° | 0.0 | 32° | 0.0 | 1.36 |
| I(e) | 500.0 | 495.0 | 32° | 0.0 | 32° | 0.0 | 32° | 0.0 | 1.41 |

NOTE: REFER TO SHEET B17 FOR ADDITIONAL DESIGN PARAMETERS AND LOAD DESCRIPTIONS

**NOT FOR CONSTRUCTION**

THIS DOCUMENT IS RELEASED FOR THE PURPOSE OF INTERIM REVIEW UNDER THE AUTHORITY OF JOHN LEE RUTLEDGE P.E. TEXAS NO: 65045 ON DATE: 10/5/2004 IT IS NOT TO BE USED FOR CONSTRUCTION, BIDDING OR PERMIT PURPOSES.

US Army Corps of Engineers
Fort Worth District

| Symbol | Description | D.O. NO. | Action | Date |
|---|---|---|---|---|

Designed by: JLR
Dwn by: CAM
Reviewed by: JLR
Submitted by: NAME TITLE
Date: JANUARY 2005
Sol No.
Contr No. CDM04188
File name:
Plot date: OCT. 2004
Plot scale: AS SHOWN

TARRANT REGIONAL WATER DISTRICT

CDM

FORT WORTH CENTRAL CITY
PRELIMINARY DESIGN

# SAMUELS AVENUE DAM DOWNSTREAM TRAINING WALLS @ 507'-0" - SLIDING STABILITY ANALYSES

SEQUENCE NO.
SS-19



DESIGN FILE: ST-DAM-EL-B12

Contr No.

PLOT DATE: OCT 01, 2004 USER: CMW
[CDM04188]N:\WR\REPORT\ST-DAM-EL-B12.DWG LAYOUT: Layout1
JAN 11, 2005 3:10:43 PM LTS: 1.00 PSLTS: 1 TWIST: 0.0
REFERENCE FILE: N:\STANDARD\2521G-BS

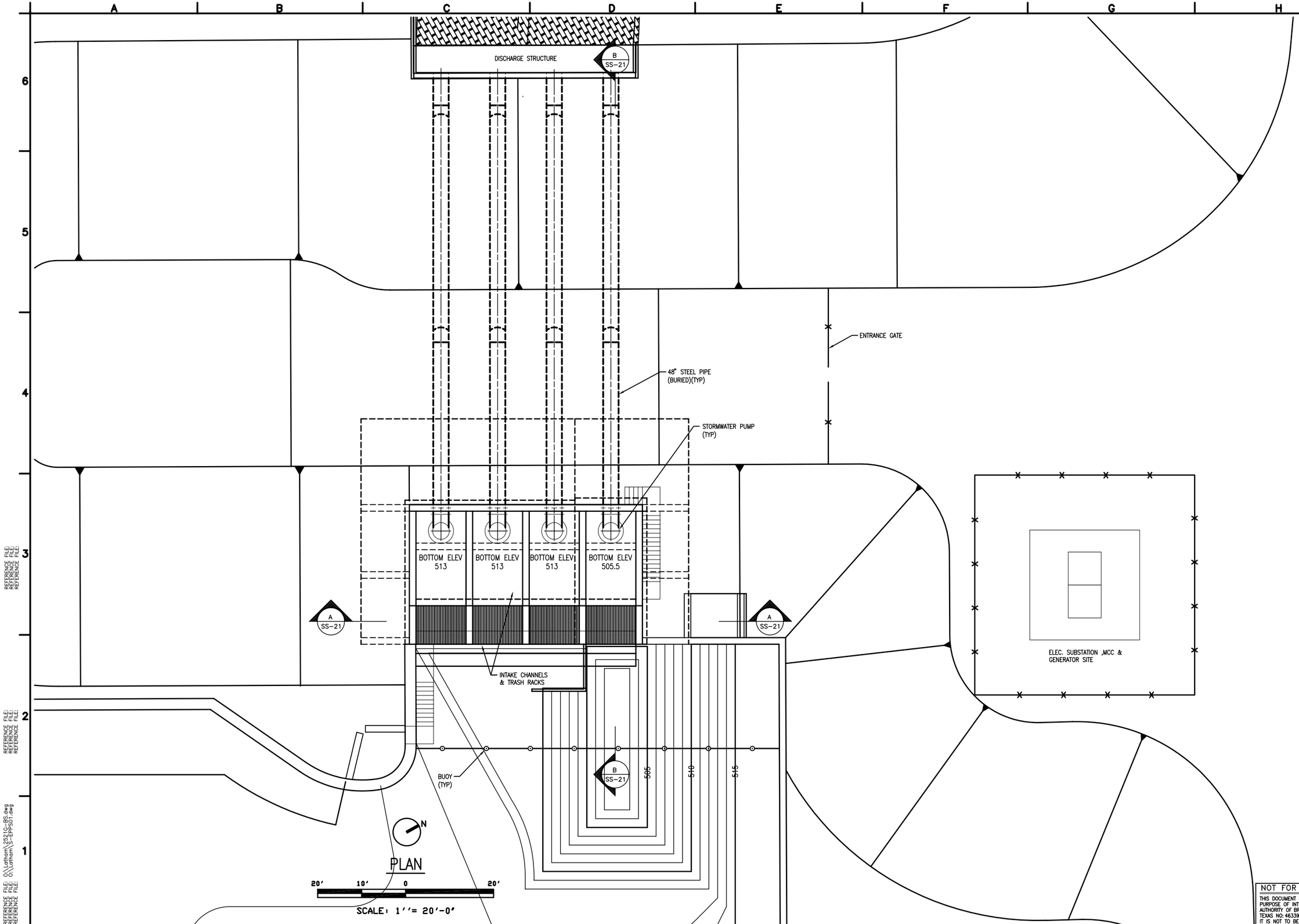


WEST FORK LEVEE LOOP ROAD

US Army Corps of Engineers
Fort Worth District

| Symbol | Description | Mod. No. | Action | Date |
|---|---|---|---|---|

DESIGN FILE: SS420137.DWG

TARRANT REGIONAL WATER DISTRICT

CDM

Designed by: B. McDANIEL
Dwn by: B. LATHAM
Reviewed by: D. FUNDERLIC
Submitted by: NAME TITLE

Date: JANUARY 2005
Sol No. XXXXXX
Contr No. XXXXXX
File name: XXXXX
Plot date: XXXXXX
Plot scale: XXXXXX

FORT WORTH CENTRAL CITY
PRELIMINARY DESIGN

STORM PUMP STATION
ENLARGED PLAN

SEQUENCE NO.
SS-20

Sheet 137 of 139

Contr No.

NOT FOR CONSTRUCTION

THIS DOCUMENT IS RELEASED FOR THE PURPOSE OF INTERIM REVIEW UNDER THE AUTHORITY OF BRIAN A. MCDANIEL TEXAS NO: 46339 ON DATE: 01/13/2005 IT IS NOT TO BE USED FOR CONSTRUCTION, BIDDING OR PERMIT PURPOSES.

REFERENCE FILE: Q:\Latham\2521G-BS.dwg
REFERENCE FILE: Q:\Latham\S-EPPS01.dwg
REFERENCE FILE:
REFERENCE FILE:
REFERENCE FILE:
REFERENCE FILE:
REFERENCE FILE:
REFERENCE FILE:

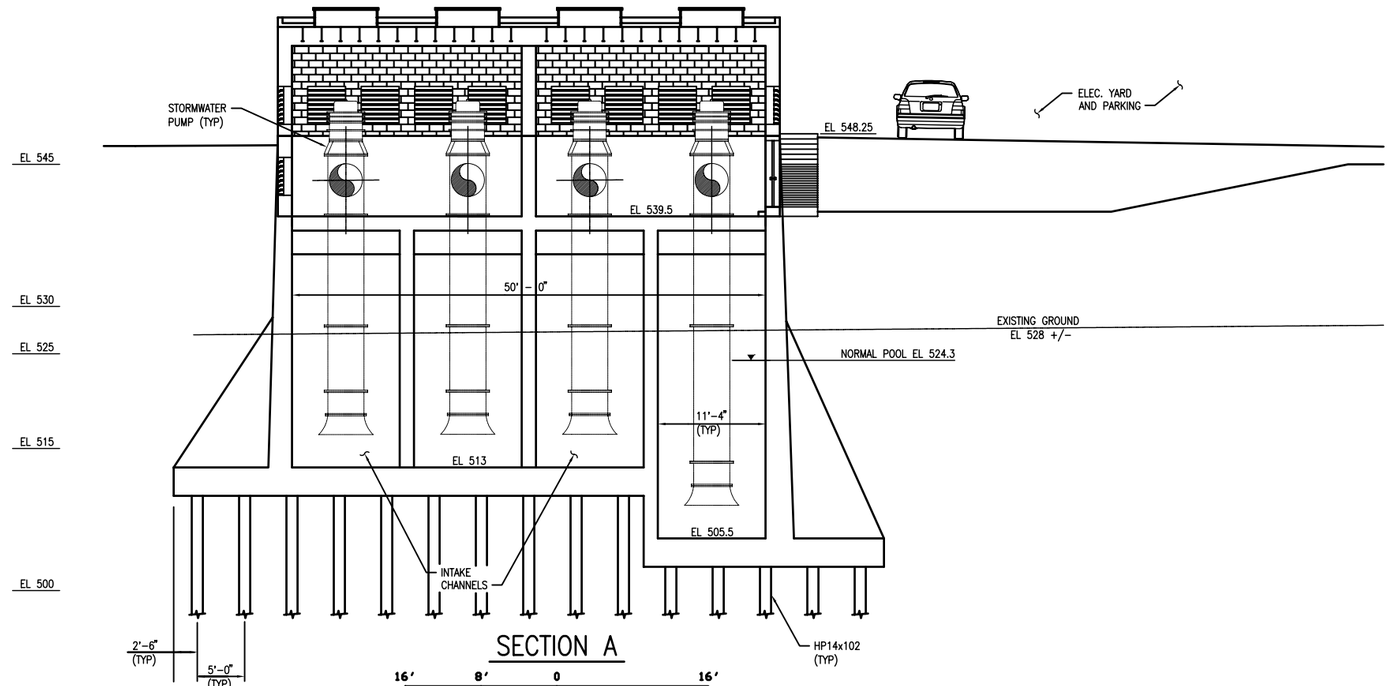


## SECTION A

16' 8' 0 16'

SCALE: 1/16 ''= 1'-0"

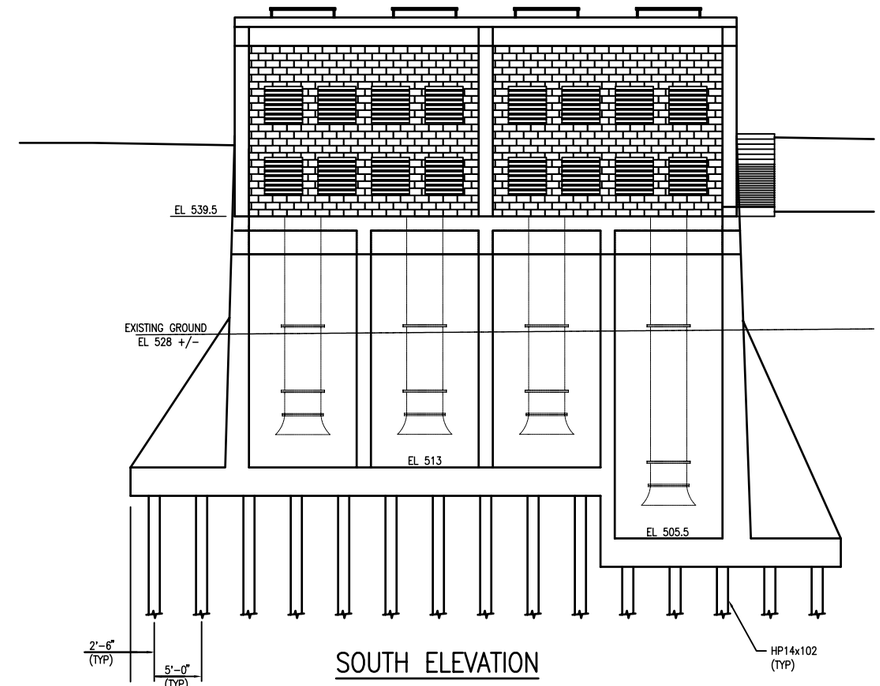


## SOUTH ELEVATION

16' 8' 0 16'

SCALE: 1/16 ''= 1'-0"

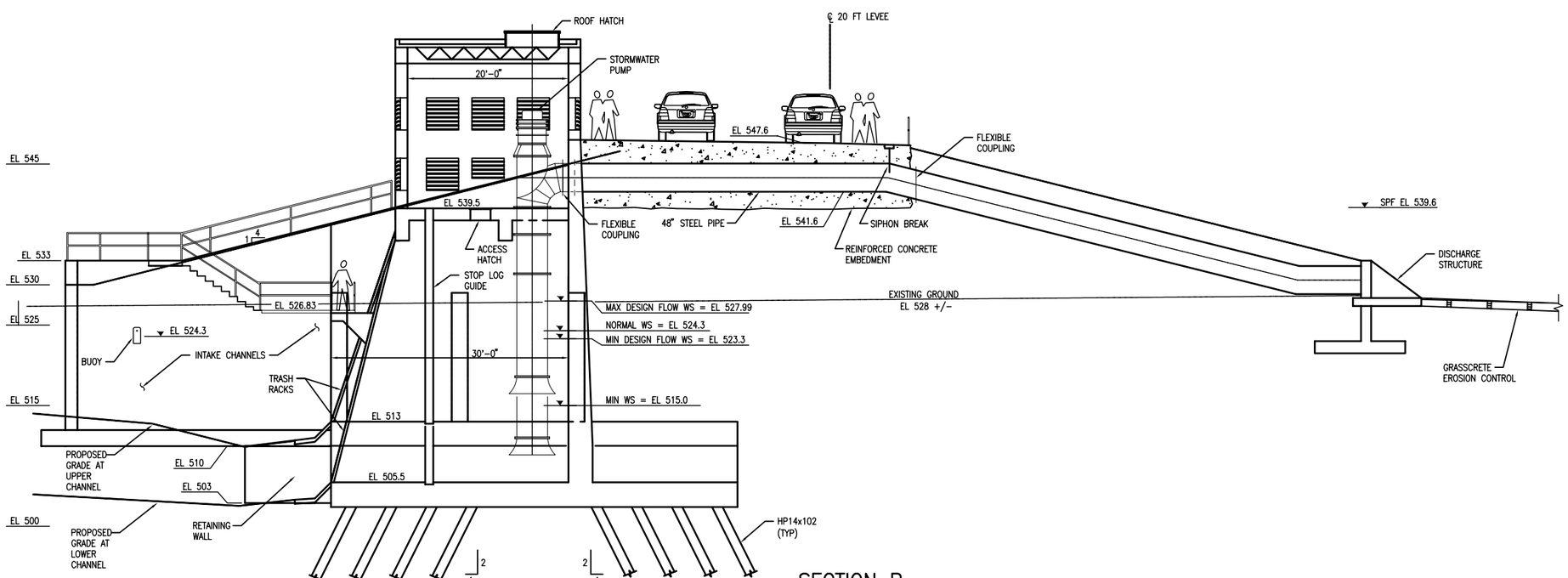


## SECTION B

16' 8' 0 16'

SCALE: 1/16 ''= 1'-0"

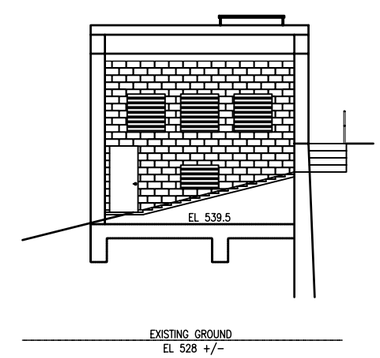


## EAST ELEVATION

16' 8' 0 16'

SCALE: 1/16 ''= 1'-0"

NOT FOR CONSTRUCTION

THIS DOCUMENT IS RELEASED FOR THE PURPOSE OF INTERIM REVIEW UNDER THE AUTHORITY OF BRIAN A. MCDANIEL TEXAS NO: 46339 ON DATE: 01/13/2005 IT IS NOT TO BE USED FOR CONSTRUCTION, BIDDING OR PERMIT PURPOSES.

US Army Corps of Engineers
Fort Worth District

| Symbol | Description | By | Date | By | Action |
|---|---|---|---|---|---|

DESIGN FILE: SS321138.DWG

Designed by: B. McDANIEL
Date: JANUARY 2005
Dwn by: B. LATHAM
Sol No. XXXXXX
Reviewed by: D. FUNDERLIC
Contr No. XXXXXX
Submitted by: NAME TITLE
File name: XXXXX
Plot date: XXXXX
Plot scale: XXXXXX

TARRANT REGIONAL WATER DISTRICT

CDM

FORT WORTH CENTRAL CITY PRELIMINARY DESIGN

# STORM PUMP STATION SECTIONS & ELEVATIONS

SEQUENCE NO.
SS-21



Contr No.

REFERENCE FILE: O:\Latham\2921G-BS.dwg
REFERENCE FILE: O:\Latham\S-SCPS01.dwg

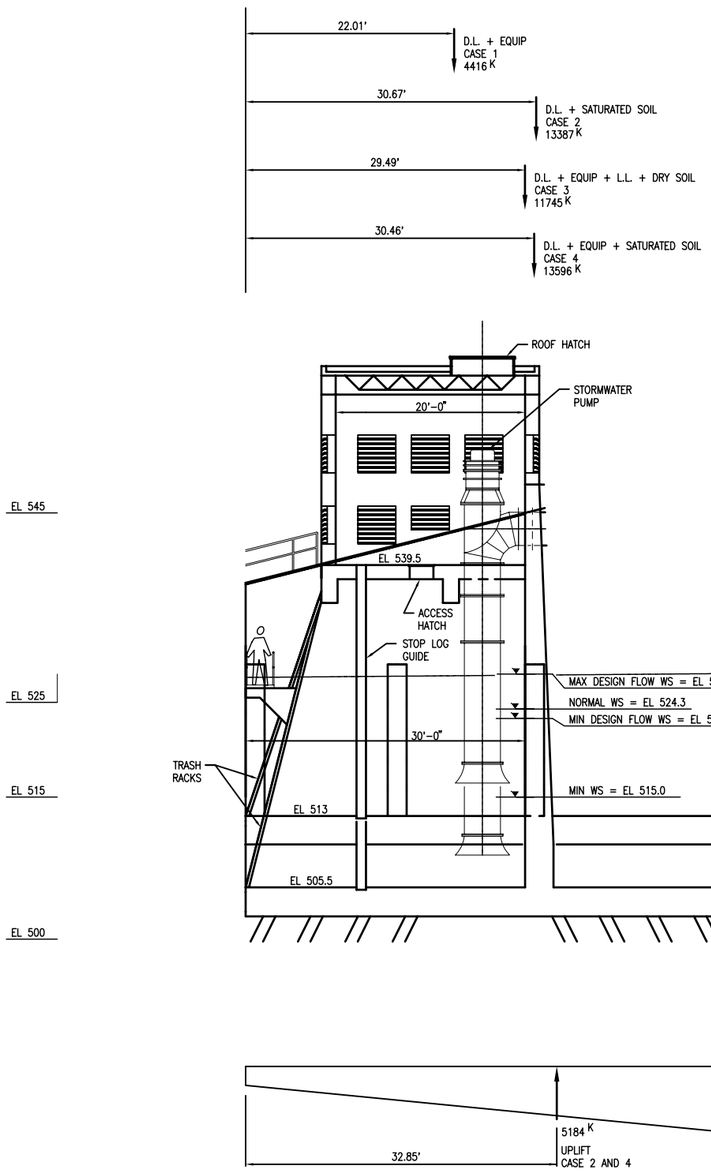


## LOADING DIAGRAM

16' 8' 0 16'

SCALE: 1/16 ''= 1'-0"

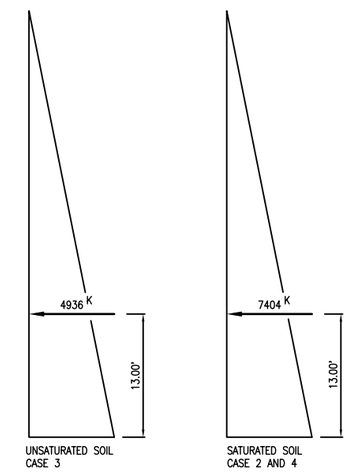


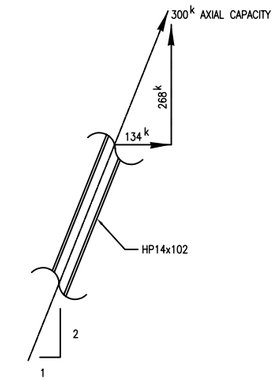


## H-PILE CAPACITY

| Storm Water Pump Station - Stability Analyses Results (Pile Foundation) | | | |
|---|---|---|---|
| Load Condition | Vertical Load (kips) | Horizontal Load (kips) | Eccentricity (ft) |
| I. Construction Condition | 4,416 | 0 | 3.49 |
| II. Construction / Maintenance Condition | 8,203 | 7,404 | 7.94 |
| III. Normal Load Condition - Drained | 12,996 | 4,936 | 2.20 |
| IV. Normal Load Condition - Undrained | 8,412 | 7,404 | 7.95 |

NOTES:

1. VERTICAL PILE CAPACITY = (268 K/PILE)*(15 PILES/ROW)*(8 ROWS) = 32,160 KIPS.
2. LATERAL PILE CAPACITY = (134 K/PILE)*(15 PILES/ROW)*(4 ROWS BATTERED UPSTREAM) = 8,040 KIPS.
3. ECCENTRICITY IS RELATIVE TO CENTERLINE OF BASE (POSITIVE DOWNSTREAM).
4. ALL ECCENTRICITIES ARE WITHIN THE MIDDLE THIRD (KERN) OF THE BASE.
5. BEARING CAPACITY AND SLIDING FACTOR OF SAFETY ARE NOT REPORTED FOR FOUNDATION ON PILES.

DESCRIPTION OF LOAD CONDITIONS:

I. CONSTRUCTION CONDITION:
DEAD LOADS AND EQUIPMENT LOADS ONLY; NO LIVE LOADS; NO SOIL OR WATER LOADS.
II. CONSTRUCTION / MAINTENANCE CONDITION:
UNDRAINED BACKFILL; INLET EMPTY; NO EQUIPMENT OR LIVE LOADS; UPLIFT ON 100% OF BASE.
III. NORMAL LOAD CONDITION: – DRAINED
DRAINED BACKFILL; INLET AT MAX. WATER LEVEL; EQUIPMENT AND LIVE LOADS INCLUDED; NO UPLIFT.
NORMAL LOAD CONDITION – UNDRAINED
IV. UNDRAINED BACKFILL; INLET EMPTY; EQUIPMENT LOADS INCLUDED; NO LIVE LOADS; UPLIFT ON 100% OF BASE.

US Army Corps of Engineers
Fort Worth District

| Symbol | Description | D.O. NO. | Action | Date |
|---|---|---|---|---|
| | | xx | xx | xx |

Designed by: E. BJORKLUND
Dwn by: B. LATHAM
Reviewed by: D. FUNDERLIC
Submitted by: NAME TITLE
Date: JANUARY 2005
Sol No. XXXXXX
Contr No. XXXXXX
File name: XXXXX
Plot date: XXXXX
Plot scale: XXXXXX

TARRANT REGIONAL WATER DISTRICT

CDM

FORT WORTH CENTRAL CITY PRELIMINARY DESIGN

STORM PUMP STATION LOADING DIAGRAM

NOT FOR CONSTRUCTION

THIS DOCUMENT IS RELEASED FOR THE PURPOSE OF INTERIM REVIEW UNDER THE AUTHORITY OF ERIC J. BJORKLUND TEXAS NO: 68413 ON DATE: 01/13/2005 IT IS NOT TO BE USED FOR CONSTRUCTION, BIDDING OR PERMIT PURPOSES.

SEQUENCE NO.
SS-22
Sheet 139 of 139

DESIGN FILE: SS622139.DWG

Contr No.

REFERENCE FILE: O:\Latham\2521G-BS.dwg
REFERENCE FILE: O:\Latham\S-SCPS01.dwg