MIL-HDBK-1191
24 MAY 1996

MILITARY HANDBOOK

DEPARTMENT OF DEFENSE

MEDICAL MILITARY CONSTRUCTION PROGRAM FACILITIES

DESIGN AND CONSTRUCTION CRITERIA

AMSC N/A

DISTRIBUTION STATEMENT A. APPROVED FOR PUBLIC RELEASE:
DISTRIBUTION IS UNLIMITED

AREA FACR

ABSTRACT

This handbook provides mandatory design and construction criteria for facilities in the DoD Medical Military Construction Program. Service-specific criteria may augment this handbook, but requirements that exceed this guidance must be fully justified to ensure understanding by the reviewing officials.

The procedures outlined in this handbook apply from the time the Design Authorization (DA) is issued by the Defense Medical Facilities Office (DMFO) and throughout the design, construction, Beneficial Occupancy, and the Post-Occupancy Evaluation (POE) period.

While these criteria were not developed primarily for use in review of military construction program and budget submissions, it is recognized they may be used for that purpose. Projects should not, however, be approved, disapproved, or justified solely on the basis of these criteria.

This document is not intended to be the basis of design for Operations and Maintenance (O&M) or Repair and Maintenance (R&M) work though it may serve as a guide in the absence of other relevant criteria.

FOREWORD

This handbook is issued under the authority of DoD Directive 6015.17, "Procedures for the Planning, Programming, Budgeting and Execution for Construction of Military Health Facilities," April 1, 1991. It complies with the policy of DoD Directives 5136.10, "Defense Medical Support Activity," dated February 6, 1986 and 6015.16, "Department of Defense Policies for Planning Fixed Military Health Facilities," dated April 15, 1986, which gave the Defense Medical Facilities Office (DMFO) the authority to develop and maintain the facilities planning, design and construction criteria in support of the missions of the Military Health Services System.

This handbook applies to the Office of the Secretary of Defense (OSD), the Military Departments, the Organization of the Joint Chiefs of Staff (OJCS), the Unified and Specified Commands, the Defense Agencies, and activities administratively supported by OSD (hereafter referred to collectively as "DoD Components"). This handbook covers criteria unique to Category Code 171, 310 and 500 facilities only and shall be used in conjunction with the MIL-HDBK-1190, "Facility Planning and Design Guide," for general building requirements.

The Defense Medical Facilities Office (DMFO), 5205 Leesburg Pike, Suite 1000, Skyline 1, Falls Church, VA 22041-3208, is the Office of Primary Responsibility (OPR) for approval of this handbook. The U.S. Army Corps Of Engineers is the Executive Agent responsible for maintenance of the Handbook. Recommendations for improvement to this handbook are encouraged and should be reported on the DoD Form 1426 provided inside the back cover to the U.S. Army Corps Of Engineers, CEMP-EM, 20 Massachusetts Avenue, N.W., Washington D.C. 20314-1000 with an information copy to DMFO. The using Military Departments and the Design and Construction Agents may submit proposed changes to this handbook through the Medical Facilities Acquisition and Maintenance Board (MFAMB) for consideration.

This handbook shall not be used as a reference document for procurement of facilities construction. It is to be used in the purchase of facilities engineering studies and design (final plans, specifications, and cost estimates). Do not reference it in military or federal specifications or other procurement documents.

TABLE OF CONTENTS

PART I

GENERAL GUIDANCE

Page

Section 1. GENERAL GUIDANCE.....1-1
1.1 General.....1-1
1.2 Applicability.....1-1
1.3 Policy.....1-1
1.4 Responsibilities.....1-1
1.5 Referenced Documents.....1-2
1.6 Restrictions.....1-2
1.7 Predesign Considerations.....1-2
1.8 Design Considerations.....1-4
1.9 Improvement to Existing Facilities.....1-5
1.10 Types of Construction.....1-7

PART II

DESIGN PROCEDURES, SUBMITTALS, AND DOCUMENTATION

Section 2. DESIGN PROCEDURES, SUBMITTALS, AND DOCUMENTATION....2-1
2.1 General.....2-1
2.2 Design Goals.....2-1
2.3 Design Sequence and Responsibilities.....2-1
2.4 Reporting Requirements.....2-4
2.5 Design Submittals and Documentation.....2-4
2.5.1 Economic, Engineering and Environmental Studies.....2-4
2.5.2 Value Engineering Study.....2-4
2.5.3 Design Documentation.....2-4
2.5.4 Schematic Design Submittal (S-2).....2-5
2.5.5 35 Percent Design Submittal (S-4).....2-6
2.6 Rendering.....2-6
2.7 Constructability Study.....2-6
2.8 Final Design (35% - 100%)..... 2-6
2.8.1 Comprehensive Interior Design (CID).....2-7
2.8.2 Final Submittal.....2-7

PART III

MASTER PLANNING AND SITE DEVELOPMENT

Section 3. SITE DEVELOPMENT.....3-1
3.1 General.....3-1
3.2 Site Design.....3-1
3.3 Construction in Floodplains or on Wetlands.....3-1
3.4 Planning Procedures for the National Capital Region.3-2
3.5 Energy Concerns.....3-2
3.6 Accessibility for the Disabled.....3-2
3.7 Security Fencing.....3-2
3.8 Landscape Planting.....3-2
3.9 Soil Conditions.....3-3
3.10 Siting of Utilities.....3-3
3.11 Vehicular and Pedestrian Circulation.....3-4
3.12 Parking Facilities.....3-4

PART IV

TECHNICAL GUIDANCE

Section 4. ARCHITECTURAL 4-1
4.1 General.....4-1
4.2 External Design.....4-1
4.3 Internal Design.....4-1
4.4 Circulation.....4-3
4.5 Floor-to-Floor Heights.....4-3
4.6 Exterior Wall Design.....4-3
4.7 Fenestration and Windows.....4-4
4.8 Interior Construction.....4-4
4.9 Floors.....4-5
4.10 Wall and Partition Systems.....4-5
4.11 Ceilings.....4-6
4.12 Interior Finishes.....4-6
4.13 Vestibules and Doors.....4-6
4.14 Color Selections.....4-6
4.15 Signage.....4-7
4.16 Acoustics.....4-8

Section 5. STRUCTURAL.....5-1
5.1 General 5-1
5.2 Design Criteria.....5-1
5.3 Protective Construction Criteria.....5-1
5.4 Soil Investigations.....5-1
5.5 Special Design Considerations.....5-1
5.6 Alternative Structural Systems.....5-2

Section 6. SEISMIC DESIGN.....6-1
6.1 General.....6-1
6.2 Design Requirements.....6-1
6.3 Operational Level Criteria.....6-1
6.4 Design Development of New Facilities.....6-3
6.5 Provisions for Fire Protection System.....6-4
6.6 Provisions for Exit.....6-4
6.7 Provisions for Hazardous Materials.....6-4
6.8 Provisions for Alternate Source Power System.....6-4
6.9 Provisions for Communications Systems.....6-5
6.10 Provisions for Transport Systems.....6-5
6.11 Provisions for Mechanical Systems.....6-5
6.12 Provisions for Medical Systems.....6-6
6.13 Provisions for Architectural Systems.....6-6

Section 7. ENERGY AND WATER CONSCIOUS DESIGN.....7-1
7.1 General.....7-1
7.2 Policy.....7-1
7.3 Design Guidelines.....7-1
7.4 Design Goals.....7-3
7.5 Design Analysis.....7-3

Section 8. HEATING, VENTILATING AND AIR CONDITIONING (HVAC)....8-1
8.1 General.....8-1
8.2 Eligibility for Air Conditioning.....8-2
8.3 Mechanical Equipment Space.....8-3
8.4 HVAC System Design for Functional Areas.....8-4
8.5 General Design Considerations.....8-5
8.6 HVAC System Controls.....8-6
8.7 Source of Steam for Humidification.....8-7
8.8 Air Handling and Distribution.....8-7
8.9 Maintenance Provisions.....8-8
8.10 Noise and Vibration Minimization.....8-9
8.11 Interdisplinary Coordination.....8-9
8.12 Ventilation Design.....8-10

Section 9. PLUMBING AND MEDICAL GASSES.....9-1
9.1 General.....9-1
9.2 Plumbing Systems.....9-1
9.2.1 Plumbing System Performance.....9-1
9.2.2 Potable Water Supply System.....9-1
9.2.3 Water Treatment.....9-1
9.2.4 Water Purification Systems 9-2
9.2.5 Potable Hot Water Systems.....9-2
9.2.6 Plumbing Fixtures.....9-3
9.2.7 Sanitary Drainage System.....9-4
9.2.8 Storm Water Disposal.....9-5
9.2.9 Gas Service.....9-5
9.3 Medical Gas Systems.....9-5
9.3.1 Design Guidance.....9-5
9.3.2 Compressed Air Systems.....9-7
9.3.3 Vacuum Systems.....9-13
9.3.4 Piped Medical Gas Systems.....9-17
9.3.5 Sterilization Gas.....9-20
9.3.6 Process Gas.....9-21

Section 10. ELECTRICAL.....10-1
10.1 General.....10-1
10.2 Exterior Electrical.....10-1
10.3 Electrical Service.....10-1
10.4 Alternate Power Source.....10-2
10.5 Interior Electrical Systems.....10-4
10.6 Lighting.....10-5
10.7 Lightning Protection.....10-7
10.8 Seismic Considerations.....10-7

Section 11. COMMUNICATIONS, INFORMATION SYSTEMS, AND SIGNAL SYSTEMS.....11-1
11.1 General.....11-1
11.2 Communication Distribution Facilities.....11-1
11.3 Central Telephone System Requirements.....11-3
11.4 Central Dictation System.....11-3
11.5 Facsimile System (FAX).....11-4
11.6 Public Address, Paging, and Program Distribution Systems.....11-4
11.7 Fire Detection and Alarm System.....11-4
11.8 Energy Monitoring and Control System (EMCS).....11-4
11.9 Intrusion Detection System.....11-4
11.10 Nurse Call System.....11-4
11.11 Card Access.....11-5
11.12 Miscellaneous Communications Systems.....11-5

Section 12. PROVISIONS FOR THE DISABLED.....12-1
12.1 General.....12-1
12.2 Military Exclusions.....12-1
12.3 Overseas Facilities.....12-1
12.4 Waiver Authority.....12-1
12.5 DMFO Compliance Requirement.....12-1
12.6 Medical Device Controls.....12-1
12.7 Interpretations and Waivers.....12-1

Section 13. FIRE PROTECTION.....13-1
13.1 General.....13-1
13.2 Criteria.....13-1
13.3 Construction.....13-1
13.4 Occupancy Classification.....13-3
13.5 Means of Egress.....13-2
13.6 Fire Detection and Alarm System (FDAS).....13-2
13.7 Smoke Control Systems.....13-2
13.8 Automated Sprinkler Protection.....13-3
13.9 Electronic Communications and ADP Installations....13-3
13.10 Atriums/Malls.....13-3
13.11 Integrated Building Systems (IBS).....13-3

Section 14. SECURITY.....14-1
14.1 General.....14-1
14.2 Levels of Security Resistance.....14-1
14.3 Security Systems.....14-2
14.4 Sensitive Areas.....14-4
14.5 External Security.....14-5

Section 15. CONTINGENCY FACILITIES.(Section has been deleted)..15-1

Section 16. MEDICAL AND DENTAL EQUIPMENT.....16-1
16.1 General.....16-1
16.2 Procurement.....16-1
16.3 Design.....16-2
16.4 Special Requirements.....16-2
16.5 Food Service Equipment.....16-2
16.6 Dental.....16-3
16.7 High Technology Equipment.....16-3
16.8 Magnetic Resonance Imaging Facilities (MRI).....16-3
16.9 Hyperbaric Chambers.....16-3

Section 17. TRANSPORTATION AND MATERIAL HANDLING SYSTEMS.....17-1
17.1 General.....17-1
17.2 Traffic Separation and Circulation.....17-1
17.3 Traffic Flow Rates and Queuing.....17-2
17.4 Ramps.....17-4
17.5 Elevator and Escalator Planning Factors.....17-4
17.6 Elevator Performance Criteria.....17-7
17.7 Elevator Design Considerations.....17-8
17.8 Materials Handling and Management Systems Considerations.....17-11

Section 18. WASTE MANAGEMENT.....18-1
18.1 Introduction.....18-1
18.2 General Design Requirements.....18-2
18.3 Waste Management System Facility Space Requirements.....18-2
18.4 Waste Collection and Transport.....18-5
18.5 NRMN Processing and Disposal.....18-5
18.6 RMW Processing.....18-7
18.7 Special Requirements for Hazardous Waste.....18-9

Section 19. INTEGRATED BUILDING SYSTEMS.....19-1
19.1 General.....19-1
19.2 IBS Elements.....19-1
19.3 IBS Justification.....19-3
19.4 Design Considerations.....19-6
19.5 Construction Documentation.....19-10
19.6 Bidding Consideration.....19-10
19.7 Preconstruction Requirement.....19-10

PART V

CONSTRUCTION

Section 20. CONSTRUCTION.....20-1
20.1 General.....20-1
20.2 Advertising.....20-1
20.3 Contract Award.....20-1
20.4 Construction Management.....20-1
20.5 Construction Change Orders.....20-2
20.6 Contingencies.....20-3
20.7 Installed Equipment (Category E and F).....20-3
20.8 Contractor Claims.....20-4
20.9 Reporting Requirements.....20-4
20.10 Acceptance Plan.....20-4
20.11 Post-Occupancy Evaluation (POE).....20-4
20.12 Liaison and Design Feedback.....20-4
20.13 Statement of Conditions.....20-5

APPENDICES

Appendix A
ARCHITECTURAL AND ENGINEERING DESIGN REQUIREMENTS.....Apdx A-1

Appendix B
DESIGN SUBMITTALS AND DOCUMENTATION.....Apdx B-1

Appendix C UNIVERSAL X-RAY ROOM.....Apdx C-1

Appendix D
UFAS INTERPRETATIONS AND WAIVERS.....Apdx D-1

Glossary GLOSSARY OF TERMS, ABBREVIATIONS, AND ACRONYMS.....GLOS-1

DD Form 1426 STANDARDIZATION DOCUMENT IMPROVEMENT PROPOSAL.....IBC

FIGURES

Figure	Title	Page
1-1	SITE SURVEY	1-8
1-2	LOGISTICAL RESPONSIBILITY FOR BUILDING SYSTEMS	1-10
1-3	CHECKLIST FOR MEDICAL FACILITY UPGRADE SURVEYS	1-13
2-1	DoD MEDICAL MILCON TIMETABLE FOR PLANNING, BUDGETING, DESIGN AND PROJECT EXECUTION (FYXX, TYPICAL)	2-2
2-2	DESIGN FUNDS STATUS REPORT	2-8
2-3	PROJECT STATUS REPORT	2-9
2-4	MILCON FUNDS STATUS REPORT	2-10
2-5	GROSS AREA CALCULATION	2-11
2-6	NET AREA TABULATION	2-13
10-1	HOSPITAL ONE LINE DIAGRAM	10-8
17-1	SERVICE CARS IN-LINE	17-9
17-2	PASSENGER CARS IN-LINE	17-9
17-3	ADJACENT ENTRANCES IN-LINE	17-9
17-4	ADJACENT ENTRANCES 180 DEGREES (OPPOSING)	17-10
17-5	ELEVATOR WITH DEAD END LOBBY	17-10
17-6	ELEVATOR SETBACK	17-10
18-1	TYPICAL SOILED UTILITY ROOM FOR A GENERAL NURSING UNIT	18-4
19-1	INTEGRATED BUILDING SYSTEM ELEMENTS	19-2
19-2	ALTERNATIVE BUILDING FORMS	19-4
C-1	DoD/VA UNIVERSAL X-RAY ROOM - FLOOR PLAN	Apdx C-4
C-2	DoD/VA UNIVERSAL X-RAY ROOM - ELEVATIONS	Apdx C-6
C-3	DoD/VA UNIVERSAL X-RAY ROOM - REFLECTED CEILING PLAN	Apdx C-7
D-1	DRESSING ROOM 40 NSF	Apdx D-13
D-2	DRESSING ROOM 45.5 NSF	Apdx D-14
D-3	PUBLIC TOILET SCHEME SUBMITTAL FOR UFAS INTERPRETATION	Apdx D-15
D-4	TURNAROUND CLEARANCE IN SPACE WITH TWO DOORS SUBMITTAL FOR UFAS INTERPRETATION	Apdx D-16
D-5	TWO HINGED DOORS IN SERIES SUBMITTAL FOR UFAS INTERPRETATION	Apdx D-17
D-6	BATHROOM SCHEME SUBMITTAL FOR UFAS INTERPRETATION	Apdx D-18
D-7	MEMORANDUM FOR ASSISTANT SECRETARY OF DEFENSE (HA) Waivers and Modifications of Accessibility Standards for Psychiatric Ward at Portsmouth Naval Hospital	Apdx D-19
D-7	LAVATORY CLEARANCES - Figure 31(b)	Apdx D-21
DD 1426	STANDARDIZATION DOCUMENT IMPROVEMENT PROPOSAL	INSIDE BACK COVER

TABLES

Table	Title	Page
3-1	AUTHORIZED PARKING SPACES FOR MEDICAL AND DENTAL TREATMENT FACILITIES	3-5
7-1	MAXIMUM THERMAL TRANSMISSION VALUES FOR DoD MEDICAL AND DENTAL TREATMENT FACILITIES	7-4
7-2	DESIGN ENERGY TARGETS (DET) FOR DoD MEDICAL AND DENTAL TREATMENT FACILITIES	7-6
7-3	Energy Conversion Factors	7-7
9-1	MEDICAL GAS SYSTEMS	9-8
9-2	MEDICAL COMPRESSED AIR SYSTEM DEMAND	9-10
9-3	RECEIVER SIZE	9-11
9-4	MEDICAL LABORATORY AIR SYSTEM DEMANDS	9-12
9-5	SHDA UTILIZATION FACTORS	9-13
9-6	DHV DEMAND FACTORS	9-15
9-7	DEMAND FLOW RATE INCREASE	9-16
9-8	SEPARATOR TANK SIZING	9-16
9-9	LDE SYSTEM UTILIZATION FACTORS	9-17
9-10	OXYGEN SYSTEM UTILIZATION FACTORS	9-18
9-11	CYLINDER MANIFOLD SYSTEM	9-18
9-12	NITROUS OXIDE SYSTEM UTILIZATION FACTORS	9-19
9-13	NITROUS OXIDE SYSTEM MANIFOLD SIZING	9-19
9-14	MANIFOLD SIZING FOR NITROGEN SYSTEMS	9-20
9-15	PROCESS GAS UTILIZATION FACTORS	9-21
17-1	ELEVATOR TRAFFIC SEPARATION GUIDELINES	17-3
17-2	TYPICAL FACILITY Average Interval Performance Standards	17-6
17-3	PASSENGER HANDLING CAPACITY	17-6
17-4	AVERAGE MAXIMUM RIDE	17-7
17-5	ELEVATOR TYPES AND SPEEDS	17-8
17-6	MATERIALS HANDLING SYSTEM ALTERNATIVE MATRIX	17-12
18-1	TECHNIQUES FOR TREATMENT OF RMW	18-10

BLANK PAGE

SECTION 1: GENERAL GUIDANCE

1.1 General. This section provides general guidance on Department of Defense (DoD) policies and procedures for design and construction of Defense Medical Program Facilities, including medical and dental treatment facilities (MTF's), medical research facilities, and all other facilities in the Defense Medical Program. It is the DoD objective to provide facilities that are responsive to the functional requirements of the using Military Department.

1.2 Applicability. This document sets forth DoD policy, procedures, and technical criteria for construction of facilities in the Defense Medical Military Construction Program (MILCON) and other construction projects over $300,000. In overseas locations where Status of Forces Agreements (SOFA) or local host country codes and standards conflict with the criteria in this handbook, conflicts will be resolved on a case-by-case basis and whenever feasible settled at the Design Agent level.

1.3 Policy. As stated in the DoD Directive 6015.16 (reference 1b), it is DoD policy to design efficient, economical, and safe facilities which sustain an effective combat force, that support the DoD medical wartime mission, and that meet the provisions of Title 10, United States Code (reference 1a). This document prescribes the DOD technical criteria and policy guidance for the design and construction of safe, functional, and durable facilities which will have reasonable and appropriate maintenance and operations costs throughout their designed life. Detailed design criteria and procedures which may be developed and issued by the DoD Components (Military Departments) shall be consistent with the policy statements and criteria contained herein and shall not exceed these criteria without DMFO approval. Facility designs shall:

1.3.1 Meet the operating requirements of the using activity and provide reasonable flexibility to accommodate future changes.

1.3.2 Provide functional facilities at the lowest practicable life-cycle-cost.

1.3.3 Be aesthetically compatible with the local environs and meet necessary environmental requirements including applicable federal, state, and local environmental standards and criteria. Necessary coordination shall be maintained with the state and local community in accordance with the requirements of E.O. 12371 (reference 1c) as implemented by DoD Directive 4165.61 (reference 1d).

1.4 Responsibilities. The Office of the Assistant Secretary of Defense (Health Affairs), OASD(HA) is responsible for planning, programming, managing financial resources, preparing and maintaining facility criteria, performing concept review, and 35% certification for facility design and construction in accordance with DoD Directives 5136.10 and 6015.16 (references 1e and 1b). The Design and Construction Agents may maintain supplementary technical criteria and will execute design and construction following established regulations and procedures unless otherwise directed by the DMFO. Design Agents will produce designs for a complete and useable facility within the approved programmed scope and programmed amount. The Military Departments as the users are responsible for all medical functional review and input during design. This functional user's responsibility often overlaps but never supersedes the technical role of the Design Agent. Specific responsibilities are addressed in various sections of this handbook.

1.4.1 Responsible Office. The Office of the Assistant Secretary of Defense (Health Affairs), OASD(HA), is responsible for the general administrative management of this entire document, and for the development and inclusion of all criteria in it.

1.4.2 Medical Facilities Acquisition and Maintenance Board (MFAMB). The MFAMB acts as the technical consultant to the Defense Medical Facilities Office (DMFO) for the contents of this document. This Board is composed of Military Department members actively involved in the planning, programming, design, and construction of facilities. The MFAMB can provide up-to-date, knowledgeable, and timely input to DMFO in all areas of facility acquisition. All MIL-HDBK-1191 criteria updates and changes may be formally submitted to this Board for evaluation and presentation to DMFO along with the MFAMB's recommendation for adoption or rejection. DD Form 1426 is provided for this purpose at the end of this MIL-HDBK-1191.

1.4.3 Waivers. DMFO has the sole authority to waive MIL-HDBK-1191 policy, procedures, or criteria. Requests for project specific waivers to any portion of this document must be submitted in writing by the Design Agent to DMFO with full particulars and justification. The coordination of the using Military Department shall be obtained before such requests are submitted to DMFO.

1.4.4 Design/Construction Agents. That agency, designated by the Secretary of Defense (SECDEF), responsible to design facilities in the Military Construction Program. Design Agents are responsible for the design of projects from receipt of a Design Authorization from DMFO through turning it over to the Construction Agents. Design Agents are:

a) The U. S. Army Corps of Engineers (USACE). The USACE Medical Facilities Office (MFO) is the primary USACE point of contact with OASD(HA).

b) The Naval Facilities Engineering Command (NAVFAC). The NAVFAC Medical Facilities Design Office (MFDO) is the primary NAVFAC point of contact with OASD(HA).

c) The Air Force Engineers (AF/CECM) in the United Kingdom. Air Force Civil Engineering Directorate of Engineering is the primary point of contact with OASD(HA).

1.5 Referenced Documents. The DoD Directives, Instructions, and selected technical data, publications and standards (latest or most current editions) are referenced in the text by basic designation only and form a part of these criteria to the extent required by these references. Where references are made to MIL-HDBK-1190 (reference 1f), those referenced sections shall become an integral portion of this guidance.

1.6 Restrictions. This handbook is not to be used as a reference document for procurement of facilities construction. It is to be used in the purchase of Military Medical and Dental Treatment Facilities engineering studies and designs (final plans, specifications, and cost estimates). It is not to be used for reference in other Military or Federal specifications or other procurement documents.

1.7 Predesign Considerations. DMFO in coordination with the using service will prepare a Project Planning Package prior to start of design to include the following:

1.7.1 DD Form 1391.

1.7.2 Project Narrative summarizing the sizing decision process, siting, significant planning information and results.

1.7.3 Program for Design, (PFD, space program), including the required number of parking spaces.

1.7.4 Equipment Planning: DMFO is responsible for planning for installed (built-in) medical and dental equipment and the associated budgeting to support this requirement (MILCON). DMFO shall provide the using Military Department with an initial equipment listing based on the Program For Design for their review and input prior to furnishing the document to the Design Agent. Each equipment list may be tailored or modified by the using Military Department as appropriate. Equipment in Logistical category Codes E and F may be altered by the using Military Department if funding source requirements are not exceeded. Any increase in the funding for category Codes E and F equipment requires DMFO approval.

1.7.5 The Project Book (PB) summarizing existing site conditions and utilities.

1.7.5.1 The using Military Department shall fund and provide the Project Book (PB) to DMFO as part of the preplanning effort. The following information, at minimum, is required:

a) Area maps, location maps, site location, site description (to include grades, gates, etc), style of architecture, construction season limitations, seismic, wind and snow considerations, SOFA, host country agreements, soil and foundation conditions, utility conditions (water, sewer, power, steam, electrical capacities and location), site restrictions (airfield, AICUZ potential helipad approach/departure zone obstructions, floodland, rights-of-way, etc.), and National Capitol Planning Region (NCR) considerations, etc.

b) Utility availability, existing fuel sources, central heat or chilled water systems and capacities, power service characteristics and locations, electrical distribution, water and wastewater considerations. .

c) Environmental impact requirements, archaeological and historical considerations, explosive ordinance locations, contaminated soil (fuel, asbestos, etc.), coastal zone considerations, wetlands and watershed considerations, threatened and endangered species considerations, water quality, air quality, asbestos contamination, protection of natural resources information, and any other Environmental Protection Agency (EPA) or Occupational Safety and Health Administration (OSHA) considerations necessary which might impact the MILCON project.

d) Security requirements, contingency or BLAST considerations.

e) Fire protection considerations, such as accessibility and water supply.

f) Communications, information or data systems, telephone and signal interface requirements for fire, police, etc., telephone switch capacities and line availability for MILCON project, Energy and Utility Monitoring and Control System (EMCS, UMCS) interface, master antenna,

cable TV and closed circuit availability, computer interface, and all other similar or useful information.

g) Preliminary analysis of replacement versus addition/alteration where requested by DMFO.

h) Completed site survey. Example format is provided in Figure 1-1.

1.8 Design Considerations.

1.8.1 Economic Considerations. Project designs must be functional, aesthetically pleasing, and cost effective to acquire, maintain, and operate. The selection of one particular design feature for a given application, when two or more options are known to be feasible, shall be based on the results of an economic study. The goal of every design is to provide the most functional, life-cycle cost-effective, maintainable, design possible within the available funds.

1.8.1.1 Cost estimates during design for building systems and casework shall be based on Figure 1-2. Logistical responsibility is explained in Section 16 and in the glossary.

1.8.2 Use of Local Materials and Skills. Project designs should consider economies that can be affected by the use of suitable local materials, construction methods, and skills which are consistent with the intent of these criteria.

1.8.3 Use of New Materials and Techniques. Project designs should consider new materials and techniques of construction, which have produced satisfactory results in actual use. Concurrence of the using Military Department, the Design Agent, and DMFO are required before proceeding with design using radically different materials or techniques.

1.8.4 Use of Stock Products. Use commercially available stock or standard materials, fixtures, and equipment whenever practicable.

1.8.5 Functional Use of Materials. Select both structural and finish materials which are consistent with simple functional design and appropriate for the climatic conditions of the geographical area where the project is located.

1.8.6 Integrated Building Systems (IBS). Consider the use of IBS concepts for the design of all facilities. The IBS walk-on deck concept may be considered when the facility is large enough to warrant this approach. Refer to Section 19 for specific guidance.

1.8.7 Future Expansion. Incorporate considerations for future expansion into all designs. Consider both external and internal expansion of vital functions such as ancillary and utility services. Building siting, vehicular access, structural systems, departmental adjacencies, functional layouts within departments, and utility type and source all play major roles in developing an economically expandable design. Provision for future vertical expansion is authorized when approved by DMFO.

1.8.8 Construction Qualities. Facilities shall be designed and constructed to provide a well-built and enduring product at the lowest practicable life cycle cost. Specific criteria for individual spaces are set forth in Appendix A. Materials used in design and construction of

overseas projects shall be in character with materials, techniques, and methodologies used for similar structures in that country, unless in the opinion of DMFO, the Design Agent and the using Military Department, U.S. standards should prevail.

1.8.9 Environmental Quality. Congressional and administrative guidance for general policies regarding environmental quality is provided in MIL-HDBK-1190 (reference 1f).

1.8.10 Fallout Protection. Provide Fallout protection according to the policy guidance given in DoD Directive 3020.35 (reference 1g) and MIL-HDBK-1190, (reference 1f), and as directed by the DMFO, using Military Department and Design Agents.

1.9 Improvement to Existing Facilities. The criteria contained herein are not to be used as the sole justification for addition/ alterations or improvements to existing facility. Categorize and estimate all costs associated with projects containing altered areas including the cost of temporary structures, if required, according to the following definitions:

1.9.1 Levels Of Facility Alteration.

1.9.1.1 Level 1 - Light alteration includes minor partition layout changes, new finish treatment, minor casework and equipment changes, minor modifications to Heating, Ventilation and Air Conditioning (HVAC) distribution systems, and minor electrical branch circuit changes. The estimated cost of this alteration should not exceed 30 percent of replacement cost for the same type of facility.

1.9.1.2 Level 2 - Medium alteration includes Level 1 changes, minor-to- major partition layout changes with associated modifications to the HVAC distribution systems and electrical power and light requirements, minor structural modifications, new plumbing fixtures, allowances for roof repair, and changes in mechanical system insulation when asbestos is present. The estimated cost of this alteration should not exceed 50 percent of replacement cost for the same type of facility.

1.9.1.3 Level 3 - Heavy alteration includes Level 1 and 2 changes, gutting of the building to structural frame without demolishing floors, exterior walls and roof assembly, modifications to structural frame, main electrical distribution system, air handling units and auxiliary equipment, plumbing system, and energy plant. The estimated cost of this alteration should not exceed 75 percent of replacement cost for the same type of facility.

1.9.2.4 Interim Facilities. The cost of interim facilities (temporary construction), if required, shall be included in the estimated cost for each of the above levels of alteration.

1.9.3 Seismic Upgrades.

1.9.3.1 Policy. The Department of Defense policy is to provide a framework to make the most effective use of medical Military Construction (MILCON) funds and to accommodate the concerns and legal requirements associated with the seismic risks faced by military hospitals. The Earthquake Hazards Reduction Act (P.L. 95-124), (reference 1k) and the National Earthquake Hazards Reduction Program, while indicating the need to ensure that critical facilities such as hospitals are serviceable

following an earthquake, also recognize that the measures necessary to implement seismic requirements are extremely expensive.

1.9.3.2 Corrective Actions. When existing facilities having seismic deficiencies are being programmed, the seismic problem will be considered along with all other factors used in developing the requirement for a construction project. When programming existing facilities that are located in areas of seismic vulnerability, a seismic evaluation of the facility will be done early in the project development process so that rehabilitation funds, if needed, could be programmed prior to project authorization. The corrective measures planned must address all factors including earthquake safety, be consistent with system- wide priorities, and be undertaken in a reasonable manner.

1.9.4 Types of Medical Facility Upgrade Surveys. Facility deficiency tabulation and upgrade surveys will be based on the following guidance. DMFO will provide the design agent a completed Figure 1-3 to establish the scope of facility upgrade survey projects.

1.9.4.1 Basic Life Safety Survey. Facility is surveyed for compliance with: NFPA 101 (reference 1h), Chapter 13, "Existing Health Care Occupancies"; and part of NFPA 99 (reference 1i), Chapter 3, "Electrical Systems". This type survey only addresses the basic life safety and fire safety issues covered in NFPA 101, Chapter 13 and NFPA 99, Chapter 3 including: means of egress; protection; detection, alarm, and communication systems; building services; and essential electrical systems. The scope of this type survey is limited by using the exception allowed in NFPA 101, paragraph 7-1.2, so that the survey will not evaluate general compliance with other references NFPA Standards. However, the scope is extended to include the Life Safety Branch of the essential electrical system in accordance with NFPA 99, Chapter 3, because the condition of the life safety branch is vital to basic life safety in health care facilities. The end product of this survey is a limited "Deficiency Tabulation Report" that: identifies and prioritizes the deficiencies; proposes corrective solutions; and provides cost estimate for corrections.

1.9.4.2 Life Safety and Utility Systems Survey. In addition to the requirements of the "Basic Life Safety Survey" this type survey also includes evaluation of the capacity and condition of building utility and support systems in relation to MIL-HDBK-1191 and using military department criteria. The end result of this survey is a "Deficiency Tabulation Report" that: identifies and prioritizes the deficiencies; proposes corrective solutions; and provides cost estimate for corrections. This type survey could include: electrical systems including compliance with NFPA 70, "National Electrical Code" (reference 1j); communication and signal systems; heating, ventilating, and air conditioning systems; plumbing and medical gas systems; and transportation systems.

1.9.4.3 Facility Modernization Survey. In addition to the requirements for the "Life Safety and Utility Systems Survey" this survey provides a complete evaluation of the functional and facility deficiencies in relation to MIL-HDBK-1191 and using military department criteria. The end result of this survey is a proposed program and cost estimate to correct the functional, architectural, and engineering deficiencies to dramatically extend the useful life of a facility. This type survey could include: functionality, medical equipment, building systems, architectural finishes, mechanical, plumbing, electrical, communication, fire and life safety, and transportation systems.

1.9.4.4 Special Studies. Any of the surveys described above could include special studies where required for a specific facility. The more common types of special studies include:

a. Economic Analysis - New vs. add/alt construction vs. lease, etc.
b. Seismic/structural.
c. Hazardous/Toxic Substances - Asbestos, PCB's, Lead in paint or in potable water, mercury contamination, etc.
d. Maintenance and Repair Deficiencies.
e. Uniform Federal Accessibility Standard and Americans With Disabilities Act Accessibility Guidelines.

1.10 Types of Construction. Construction levels and building types are outlined in MIL-HDBK-1190, Chapter 1 (reference 1f). For facilities, the following apply:

1.10.1 Permanent Construction. Facilities built in the United States, its territories, or possessions are to be of permanent construction with a life expectancy of 25 years or more.

1.10.2 Semi-Permanent Construction. Facilities built outside of the United States, its territories, or possessions are to be semi-permanent construction with a life expectancy of 5 to 25 years unless the normal building practices of the host country, Status of Forces Agreements (SOFA), or other agreements stipulate permanent-type construction.

1.10.3 Contingency Facilities. Typical free-standing medical contingency facilities are to be semi-permanent construction with a life expectancy of 15 years, durable, and consistent with locally available building technology.

1.10.4 Temporary Construction. This type of construction may be authorized as an emergency measure or as an interim solution as approved and coordinated through formal request from the using Military Departments to DMFO. Follow individual Military Department rules and regulations for construction of these facilities.

REFERENCES

1a. Title 10, United States Code (USC).

1b. DoD Directive 6015.16, "Department of Defense Policies for Planning Fixed Military Health Facilities," April 15, 1986.

1c. Executive Order 12371, "Intergovernmental Review of Federal Programs", July 16, 1982.

1d. DoD Directive 4165.61, "Intergovernmental Coordination of DoD Federal Development Programs and Activities", August 9, 1983.

1e. DoD Directive 5136.11., "Defense Medical Program Activity," October 26, 1992.

1f. MIL-HDBK-1190, "Facility Planning and Design Guide".

1g. DoD Directive 3020.35, "Fallout Shelter Analysis".

1h. NFPA 101, "Life Safety Code."

1i. NFPA 99, "Health Care Facilities Handbook."

1j. NFPA 70, "National Electric Code."

1k. P.L. 95-124, "Earthquake Hazards Reduction Act"

FIGURE 1-1

SITE SURVEY

PROJECT NAME:_____ DATE: _____

PROJECT LOCATION: _____

1. ARE ROADS TO SITE ADEQUATE? Y or N

2. IS SITE IN FLOODPLAIN? Y or N

3. WHAT IS PROJECT TYPE? NEW or ADDITION/ALTERATION

4. IS THERE ANY ASBESTOS? Y or N

5. ARE THERE ANY OTHER CONTAMINATION OR SAFETY HAZARDS? Y or N

6. ARE THERE ANY HISTORICAL STRUCTURES ON OR ADJACENT TO SITE? Y or N

7. SEISMIC ZONE OF SITE? 0 1 2 3 4

8. IS THERE ANY EXPANSIVE SOIL AT THIS SITE? Y or N

9. WHAT IS THE GENERAL BEARING STRATA DEPTH IN THIS AREA? _____

10. ARE SPECIAL FOUNDATIONS REQUIRED? NONE PIERS MAT PILES
    OTHER:_____

11. WHAT IS WATER TABLE LEVEL AT THIS SITE? _____

12. IS NOISE A PROBLEM? Y or N IF Y, WHAT IS NC-LEVEL? _____

13. ARE THERE ANY EXISTING STRUCTURES TO BE DEMOLISHED? Y or N

14. DO ANY DISPLACED FUNCTIONS NEED TO BE REPLACED? N/A, Y or N
    IF YES, WHAT ARE THEY? _____

15. DO ANY EASEMENTS CROSS THE PROPERTY? Y or N
    IF YES, WHAT ARE THEY? _____

16. WHAT IS BASIC SIZE AND SHAPE OF SITE? _____

17. WHAT IS SLOPE OF SITE? LEVEL 3-8% 9-15% 16-25% >25%

18. IS THERE ANY SIGNIFICANT VEGETATION? Y or N

19. WHAT IS THE PREVAILING WIND DIRECTION? _____

FIGURE 1-1 (CONTINUED)

20. WHAT IS AVERAGE ANNUAL RAINFALL? _____ INCHES

21. WHAT IS AVERAGE ANNUAL SNOWFALL? _____ INCHES

22. WHAT ARE THE CLIMATIC CONDITIONS? WIN DB____ SUM DB____ WB____

23. DOES WATER SUPPLY NEED TO BE TREATED? Y or N

24. WHAT IS THE AVAILABILITY OF UTILITIES TO THE SITE?

SYSTEM	DISTANCE TO CONNECTION POINT	CAPACITY AVAILABLE TO SITE	
WATER	_____ FEET	_____GPM	_____PSI
FIRE WATER	_____ FEET	_____GPM	_____PSI
CLEAN STEAM	_____ FEET	_____#/HR	_____PSI
UNTREATED STEAM	_____ FEET	_____#/HR	_____PSI
HI-TEMP HOT WATER	_____ FEET	_____GPM	_____TEMP
CHILLED WATER	_____ FEET	_____GPM	_____TEMP
SANITARY SEWER	_____ FEET	_____GPM	
STORM SEWER	_____ FEET	_____GPM	
GAS	_____ FEET	_____GPM	_____CFM
ELECTRICAL-Primary	_____ FEET	_____KVA	_____KILOVOLT
ELECTRICAL-Alternate	_____ FEET	_____KVA	_____KILOVOLT
CABLE TV	_____ FEET		
FIBER OPTIC LINE	_____ FEET		
COMMUNICATIONS	_____ FEET	_____SWITCH CAPACITY	
PATH. WASTE	_____ FEET	_____#/DAY	

25. WHAT IS THE FREQUENCY OF LIGHTNING?

26. ADDITIONAL REMARKS: (Add additional pages if necessary): _____

CERTIFICATION OFFICIAL: NAME: _____

TITLE:_____

ORGANIZATION:_____

SIGNATURE:_____

FIGURE 1-2

LOGISTICAL RESPONSIBILITY FOR BUILDING SYSTEMS

Special Instructions. The items listed in this section shall be included in construction cost estimates as appropriate.

ITEM	DIVISIONS					
	Logistical Responsibility[1]					
ITEM	A	B	C	D	E	F
Building and Grounds						
To include:						
Hospital buildings (including administration)	X					
Medical Clinic buildings	X					
Dental Clinic buildings	X					
Clinical and Medical Research Laboratory buildings	X					
Animal holding buildings	X					
Maintenance shop buildings	X					
Garages and automotive shelters	X					
Power plant buildings (steam and/or electrical)	X					
Sewage disposal plant structures	X					
Medical helicopter/air evac landing pads	X					
Chapel	X					
Recreational building (including Red Cross, gymnasiums and swimming pools)	X					
Recreational fields (including tennis courts, baseball diamonds, etc.)	X					
Guard and sentry boxes, gate houses	X					
Incinerator buildings	X					
Electrical Service						
To include:						
Wiring (including material)	X					
Conduits	X					
Switches, panels boxes, service outlets	X					
Transformers (stepdown and distribution)	X					
Lighting, fixtures (including initial lamping)	X					
Generating equipment (including emergency)	X					
Explosion-proof fixtures	X					
Power conditioning/surge protectors	X					
Heating, Air Conditioning, and Ventilation						
To include:						
Air conditioning (including packaged units)	X					
Boiler plants and water heaters	X					
Heat and steam distribution systems	X					
Central vacuum cleaning system	X					

[1] See Para 16.2.1 for definition.

ITEM	Logistical Responsibility A	B	C	D	E	F	G
<u>Plumbing</u>							
To include:							
Piping valves, fittings, and outlets	X						
Toilet, bath, and lavatory fixtures (including shower stalls, mirrors, towel racks, toilet paper dispensers, paper towel dispensers, soap dispensers, and bed pan washers	X						
Sewer systems and plants	X						
Gas, air pressure and suction, and medical gas systems	X						
Automatic sprinkler systems	X						
Fire protection system (water)	X						
<u>Refrigeration</u>							
To include:							
Refrigeration (walk-in)	X						
Deep freeze (walk-in)	X						
Built-in morgue refrigerators	X						
<u>Communications</u>:							
LAN - Local Area Network:							
Conduit, Boxes, Wiring, Patch panels, outlets	X						
Equipment			X				
Telephone System, Complete:							
Interior Conduits, Boxes, Outlets, Wiring	X						
Instruments, Outside cable and support work	X						
Interior Telephone Switching Equipment						X	
Supporting Expansion Work at Main Exchange						X	
Intercom systems, Complete:							
Conduits, Boxes, Wiring, and Equipment	X						
Public Address System, Complete:							
Conduits, Boxes, Wiring, and Equipment	X						
Television System:							
Entertainment:							
Conduits, Boxes, Wiring, Antennas	X						
Head Ends and Distribution Equipment	X						
Mounting Brackets and Low Voltage Supplies	X						
Television Receivers			X				
Training:							
Conduits, Boxes, Wiring, Distribution Eq.	X						
Cameras, Monitors, Control Equipment			X				
Security:							
Conduits, Boxes, Blank Outlets	X						

Cameras, Monitors, Wiring----------	X
Control Equipment----------	X

ITEM	Logistical Responsibility A	B	C	D	E	F	G
<u>Communications - (Continued)</u>							
Patient Physiological Monitoring:							
Conduits, Boxes, Blank Outlets	X						
Equipment			X				
Staff Radio Paging Systems, Complete:							
Conduits, Boxes, Wiring, Equipment	X						
Other Radio Systems, ie, EMS, etc.:							
Conduits, Boxes, Site Support Work	X						
Antennas, Equipment, and Wiring			X				
Card Access System, Complete:							
Conduits, Boxes, Wiring, Equipment	X						
Nurses' Call Systems, Complete:							
Conduits, Boxes, Wiring, Equipment	X						
Central Dictating System:							
Conduits, Boxes, Wiring, Outlets	X						
Dictation Equipment			X				
Intrusion detection System:							
Conduits, Boxes, Blank Outlets	X						
Wiring, Sensors and Control Equipment			X				
Other Audio-visual Systems							
Conduits, Boxes, Blank Outlets	X						
Wiring and Audio-visual Equipment			X				
Utility Control Systems, Complete:	X						
Fire Detection and Alarm System, Complete	X						
Clock Systems:-							
Central Clock System, Complete	X						
Battery Clocks			X				
<u>Transportation System</u>	X						
<u>Signage (Internal/External)</u>	X						

FIGURE 1-3

CHECKLIST FOR MEDICAL FACILITY UPGRADE SURVEYS

(Select one "Type of Survey" and any "Special Studies" required)

A. TYPES OF SURVEY.

YES NO 1. BASIC LIFE SAFETY SURVEY. Survey will address compliance with the following standards:

a. NFPA 101, Chapter 13, "Existing Health Care Occupancies". Use exception allowed in NFPA 101, para. 7-1.2, so that the survey will not evaluate general compliance with referenced NFPA standards.

b. NFPA 99, Chapter 3, "Electrical Systems" as it relates to Essential Electrical System - Life Safety Branch only.

YES NO 2. LIFE SAFETY AND UTILITY SYSTEMS SURVEY. Survey will address compliance with the following standards:

a. NFPA 101, Chapter 13, "Existing Health Care Occupancies" including general compliance with referenced standards per NFPA 101, paragraph 7-1.2.

b. The building utility systems will be surveyed in relation to: MIL-HDBK-1191, "DoD Medical and Dental Treatment Facilities Design and Construction Criteria"; and Military Department Criteria. The following systems will be addressed:

YES NO Electrical systems.
YES NO Communication and signal systems.
YES NO HVAC.
YES NO Plumbing.
YES NO Medical gas systems.
YES NO Transportation and material handling systems.
YES NO Other. Provide list.

_____
_____
_____

YES NO 3. FACILITY MODERNIZATION SURVEY. Survey will address compliance with the following standards:

a. NFPA 101, Chapter 13, "Existing Health Care Occupancies" including general compliance with referenced standards per NFPA 101, paragraph 7-1.2.

CHECKLIST FOR MEDICAL FACILITY UPGRADE SURVEYS

(Select one "Type of Survey" and any "Special Studies" required)

b. The building will be surveyed in relation to: MIL-HDBK-1191, and Military Department Criteria. The following systems will be addressed:

YES NO Site and Parking issues.
YES NO Utility services.
YES NO Structure.
YES NO Exterior Finishes, roofing, glazing, etc.
YES NO Medical/Functional Requirements.
YES NO Architectural finishes.
YES NO Equipment and Furnishings
YES NO Waste Management System.
YES NO Transportation and material handling systems.
YES NO Electrical systems.
YES NO Communication and signal systems.
YES NO Energy Usage/System Efficiency Survey.
YES NO HVAC.
YES NO Plumbing.
YES NO Medical gas systems.
YES NO Other. Provide list.
_____
_____
_____

B. SPECIAL STUDIES.

YES NO Economic Analysis. (Attach scope of analysis).
YES NO Seismic/structural evaluation.
YES NO Hazardous/Toxic substance survey.
____ Asbestos survey
____ PCB survey
____ Lead survey (in paint or in potable water)
____ Mercury contamination
____ Underground Fuel Tank Survey.
____ Other. Provide list, _____.
YES NO Maintenance and Repair Deficiency survey.
YES NO Uniform Federal Accessibility Standard and Americans with Disabilities Act Guidelines Compliance.
YES NO Other. Provide list._____.

SECTION 2: DESIGN PROCEDURES, SUBMITTALS, AND DOCUMENTATION

2.1 General. This section defines the minimum OASD-HA (DMFO) requirements for design procedures, submittals, and documentation for a typical project. Additional project specific requirements may be established by the Design Agent(s) and the using Military Department(s) to meet their specific requirements. Submittal requirement variations for DMFO submissions (S2 and S4) must have DMFO approval.

2.2 Design Goals.

2.2.1 Scope and Criteria. The goal during 0 to 35% design is to produce concept development documentation which meets project requirements and complies with criteria while establishing final project scope and an appropriate Programmed Amount (PA). Final scope and PA will be based on the approved 35% submittal and cost estimate.

2.2.2 Design to Cost. The goal during 35 to 100% design phase is to produce a set of construction documents within the PA established at 35% design approval. If design requirements or refinements cause the estimated project cost to exceed the established PA, the Design Agent with participation of the using Military Department, will present cost adjustment or reduction alternatives to DMFO before completing the design documents.

2.2.3 Design Schedules.

2.2.3.1 Major Construction. For specified location projects, the DMFO goal is to be at 35 percent design by 1 August of the year prior to planned budget submission. The Design Agent must request written approval from DMFO for late submission. The goal during final design is to complete design in time for a construction contract award during the program year of the project.

2.2.3.2 Unspecified Minor Construction. For Unspecified Minor Construction (DODI 4270.24, reference 2a), the DMFO goal is to have designs complete and projects ready for advertisement within 12 months of the date of the DMFO Design Authorization Memorandum.

2.3 Design Sequence and Responsibilities.

2.3.1 2807 Action. DMFO issues the Section 2807, Title 10 USC (reference 2b) Congressional notification after the preliminary project scope has been determined and as required to meet design and programming milestones. (See Figure 2-1).

2.3.2 Design Funds. DMFO suballocates design funds to the Design Agent to achieve the authorized level of design in accordance with Figure 2-1.

2.3.3 Design Authorization. The DMFO issues the design authorizations to the Design Agent with an information copy to the using Military Department, as appropriate, to meet design and programming milestones in Figure 2-1. The Design Agent manages design in accordance with established policies and procedures unless otherwise directed by the DMFO. Separate design authorization memoranda are normally issued for A-E Selection, Concept Design, and Final Design. The Design Agents shall not pursue level of design beyond that authorized by DMFO.

Figure 2-1

DoD MEDICAL MILCON TIMETABLE
FOR PLANNING, BUDGETING, DESIGN, AND PROJECT EXECUTION
OF A TYPICAL FY XX PROGRAM

THIS IS A MINIMUM TIMETABLE WHICH DOES NOT PRECLUDE EARLIER DESIGN START FOR OCONUS, LARGE, OR COMPLEX PROJECTS

February FYXX MINUS 4 YEARS	Begin FYXX Planning Year
July FYXX MINUS 4 YEARS	Award FYXX EA Contract(s) OASD(HA)
January FYXX MINUS 3 YEARS	FYXX EA completed Preliminary Scope Available 2807 Action OASD(HA)
February FYXX MINUS 3 YEARS	Release Design Authorization (DMFO) A-E Acquisition begins with CBD (Design Agent)
May FYXX MINUS 3 YEARS	Audit Requested for FYXX projects Programmed Scope requirements completed (DMFO) A-E Prenegotiation on FYXX projects
August FYXX MINUS 3 YEARS	Negotiated A-E contract audit completed (Design Agent)
October FYXX MINUS 3 YEARS	Issue 35% Design Authorization (DMFO) A-E Begin Design (Design Agent)
July FYXX MINUS 2 YEARS	Best concept design cost estimate to DMFO (Design Agent)
August FYXX MINUS 2 YEARS	FYXX 35 percent design submittal to DMFO (Design Agent) FYXX budget submitted to OASD(C) by OASD(HA)
September FYXX MINUS 2 YEARS	35 percent design certified (DMFO). Final concept design scope and PA approval.
October FYXX MINUS 2 YEARS	Issue Final Design Authorization (DMFO)
January FYXX MINUS 1 YEAR	FYXX MILCON Program to Congress(DoD)
July FYXX MINUS 1 YEAR	Final Design complete (A-E)
January FYXX	FYXX funds available OASD(HA) Begin Award FYXX MILCON projects (Design Agent)

2.3.3.1 Some larger, more complex, or OCONUS projects may require a greater level of effort and more time to achieve the 35 percent milestone in Figure 2-1. When this occurs, the Design Agent, with the concurrence of the using military department, may request variations to the milestones in Figure 2-1 from DMFO.

2.3.4 Architect-Engineer (A-E) Selection Authorization. This is authorization to synopsize, slate, select an A-E and to negotiate, but not to award a contract, or proceed with design. Following authorization by DMFO, the Design Agent selects an A-E following their established procedures. The using Military Department may participate in A-E selection in accordance with established Memorandum of Understanding (MOU's). DMFO may also participate when so specified in the design authorization.

2.3.5 Concepts (0 to 35%) Design Authorization. This is authorization to award an A-E contract and to proceed to 35 percent level of design. This authorization will normally be issued when a project has an approved Program For Design (PFD), the project is in the appropriate Program FY to start design action, and design funds are available. Normal presentation requirements to the DMFO are the S2 for scope approval and the S4 for cost approval. The Concept Design phase is complete when DMFO approves the S-4 submittal, scope and cost estimate.

2.3.6 35 Percent Review and Certification. Following review of the 35 percent submittal, DMFO certifies to OASD(C) (Comptroller) 35 percent design completion and project cost estimates by 15 September of the year prior to planned budget submission. The DMFO will also notify the Design Agent and the using Military Department if the Concept Design is approved, with or without comments, or disapproved, with comments.

2.3.7 Final Design Authorization. This is authorization to proceed from 35% to final design. DMFO normally provides this authorization after the 35% design is certified complete by the Design Agent and approved by the DMFO. DMFO will revise DD Form 1391 as required.

2.3.8 Design Coordination. Designs will be developed and managed with close coordination between the Design Agent, using Military Department representatives, and DMFO. DMFO will be advised of issues relating to scope, cost, criteria, policy and procedure, and/or schedule.

2.3.9 Design Changes. Design Agent and/or the using Military Department will submit proposed concept design scope refinements and final design scope changes to DMFO for approval. After S-2 approval by DMFO, all scope increases above the DMFO authorized net area will be submitted to DMFO for approval with the S-4 presentation. After the 35% approval by DMFO, all scope increases in gross square feet and scope changes which add new functions will be submitted to DMFO for approval with justification prior to incorporation into the design. The Design Agent may decide whether or not design will be suspended pending DMFO action. Design Agents may not fund design changes by deferring or otherwise delaying other DMFO funded project designs without prior approval from DMFO. Design changes which jeopardize the Design Agent's ability to meet the required design schedule will be avoided, unless necessary to meet criteria or mission requirements. All design change orders shall be processed in accordance with DODI 6015.16 (reference 2c).

2.3.10 Stopped or Deferred Designs. Decisions to stop or defer designs will be made by DMFO.

2.4 Reporting Requirements. The Design Agents will maintain accurate records on design fees, schedules, construction cost, and other project data and report this information as required below.

2.4.1 Notification of Concept Design Start. The Design Agent will notify DMFO and using military department of the A-E's name, and the design schedule within seven days after the A-E has been issued a Notice-To-Proceed (NTP) to 35 percent design.

2.4.2 Notification of Final Design Start. The Design Agent will notify DMFO of the schedule for the Final Design within 30 calendar days after the A-E has been issued a NTP to design completion.

2.4.3 Quarterly Execution Reports. The Design Agent shall submit the following reports to DMFO and using Military Department Agencies no later than three days prior to each Quarterly Execution meeting. Automated reports currently in use by the Design and Construction Agents which contain the requested information are acceptable substitutes for the report formats listed below:

2.4.3.1 Design Funds Status Report. Provide in format of Figure 2-2 for all projects authorized for design by DMFO.

2.4.3.2 Project Status Report. Provide in format of Figure 2-3 for each project authorized for design by DMFO.

2.4.3.3 MILCON Funds Status Report. Provide a report in Figure 2-4 format for all appropriated projects. (See para 20.9).

2.5 Design Submittals and Documentation.

2.5.1 Economic, Engineering, and Environmental Studies. The design is to be supported by engineering, economic, and environmental evaluations of those features which contribute most to the construction cost, energy efficiency, and environmental impact. The design is to provide the optimum combination for an efficient and effective facility at the most economical cost with the least adverse environmental impact. Such studies shall consider life-cycle-cost of the facility not just the initial construction cost. The specific studies required are identified with the other submittal requirements. Economic Analyses (EA) of new versus addition/alteration will be accomplished for projects with program amount of $2.0 million and over prior to any design authorization.

2.5.2 Value Engineering Study (VE). Conduct a value engineering (VE) study prior to the 35 percent Design Submittal in accordance with DoD Directive 4245.8 (reference 2d). VE studies consist of investigations of certain high-cost areas in a design to determine if an alternate way exists to achieve an improved design at a lower life-cycle-cost. The main objectives of VE studies are reduced life-cycle-cost and improved quality of design. The application of Value Engineering shall not result in lowering criteria or quality standards as established by the guidance in this document or reduction in the scope of the project.

2.5.3 Design Documentation. The Design Agent, in coordination with the using military department, is responsible for the design documentation on each project. The schematic and 35 percent design documentation as described below will be submitted to DMFO for approval. Appendix B provides general submittal and documentation requirements that can be tailored to specific projects. Design Agents and using military

departments may use their submittal and documentation requirements rather than Appendix B.

2.5.4 Schematic Design Submittal (S-2). This submittal includes development of the room-by-room floor plans, elevations, and initial analysis of the building systems. The primary purpose of this submittal and review is to identify and resolve all major space program deficiencies at an early stage in design and "fix" the footprint of the building. The Design Agent and using Military Department representatives will present the reviewed S-2 to DMFO. On large projects or when scope or cost significantly exceed the authorized levels, the Design Agent may elect to include the A-E in this presentation. Requests for scope revisions with justification should be submitted at this time. Scope changes will not be entertained after approval of S-2 unless fully justified. DMFO will provide approval/disapproval, with review comments, within 14 days of the submittal . The following are the minimum DMFO requirements for S-2:

2.5.4.1 Executive Summary of the various Block Plan alternatives from S-1, and rationale for the selected scheme. The primary block plan drawings from S-1 shall be included as double-page, fold-out, reduced drawings.

2.5.4.2 Summary of the narrative describing various proposed architectural and engineering aspects of the projects.

2.5.4.3 Site plans showing building location, future expansion, and existing and proposed structures, topography, utilities, roads and parking.

2.5.4.4 Floor plans for each floor showing all programmed spaces, corridors, structural grid system (including columns), electrical and mechanical equipment rooms, and stairs to meet the functional requirements. All spaces must be labeled with the room name, the room code from the DMFO Program For Design (PFD), and the programmed and designed net areas. For addition/alteration projects, preliminary demolition drawings, with photographs to depict conditions are required.

2.5.4.5 Gross area tabulation of floor area, along with a small scale, single-line, dimensioned key plan, to reflect the total space required in Figure 2-5 format.

2.5.4.6 Net area tabulations, including net to gross calculations, in Figure 2-6 format.

2.5.4.7 Current working estimate in DD Form 1391, block 9 format.

2.5.4.8 The narrative portion of the S-2 submittal, and cost estimate shall be packaged in standard U.S. 3-ring binders with labeled subject dividers, sequential page numbers, and table of contents.

2.5.5 35 Percent Design Submittal (S-4). This is the technical 35 percent Final Concept submittal. The design agent will certify to DMFO that design is 35 percent complete. A summary of the reviewed S-4 will be submitted to DMFO by the Design Agent with using Military Department coordination and participation. On large projects or when scope or cost significantly exceed the authorized levels, the Design Agent may elect to include the A-E in this presentation. Final scope and PA (cost) shall be determined with this submission. All issues regarding costs, Value Engineering Study (VE), constructability, phasing, and any other special studies must be resolved, though the results of all studies may not be

incorporated prior to presenting this submission to DMFO for approval. The minimum requirements of this submission are as follows:

2.5.5.1 Executive Summary of the of the narrative describing various proposed architectural and engineering aspects of the projects, results of VE study, and phasing plans.

2.5.5.2 Site plans showing building location, future expansion, and existing and proposed structures, topography, utilities, roads and parking.

2.5.5.3 Floor plans for each floor showing all programmed spaces, corridors, structural grid system (including columns), electrical and mechanical equipment rooms, and stairs to meet the functional requirements. All spaces must be labeled with the room name, the room code from the DMFO Program For Design (PFD), and the programmed and designed net areas. For addition/alteration projects, preliminary demolition drawings, with photographs to depict conditions are required.

2.5.5.4 All proposed exterior elevations and major building sections appropriate to the level of Concept Design.

2.5.5.5 Summary Cost Estimate and Design Agent validation statement.

2.5.5.6 An updated DD Form 1391 reflecting the reviewed cost estimate, any changes to the project description, and justification.

2.5.5.7 Gross area tabulation of floor area, along with small scale, single-line, dimensioned drawings, to reflect the total space required in Figure 2-5 format.

2.5.5.8 Updated net area tabulations, including net to gross calculations, in the format of Figure 2-6.

2.6 Rendering. If a rendering is prepared for a project, then a photographic copy of the rendering shall be provided to DMFO. The rendering should be prepared after the 35 percent submittal is approved by DMFO and should reflect the 35 percent review comments. The DMFO copy of the rendering should be titled, matted, glazed with nonglare glass or plexiglass and framed in brushed aluminum.

2.7 Constructability Study. Perform a Constructability Study for all significant projects (over $20,000,000). This study is especially important for those projects involving additions and alterations. Constructability is defined as the ease with which a designated project can be administered, bid, built, enforced, and understood. Constructability must be strongly emphasized throughout the entire planning and design process. As a minimum, the preliminary study should be performed based upon the 35 Percent Design and updated at the Final Design.

2.8 Final Design (35 percent to 100 percent). The final design phase may be initiated only after approval of Concept Design by the DMFO. If, in the preparation of final design, it is necessary to deviate substantially from the approved Concept Design, such as the rearrangement of a major medical department or a change in the interrelationship of functional elements, design may be suspended and the pertinent facts and justifications concerning the deviations will be submitted for review and approval by DMFO.

2.8.1 Comprehensive Interior Design (CID). The final design phase, at option of using Military Department, may include a Comprehensive Interior Design (CID) effort for furniture and accessory selection, layout and identification, and documentation for procurement. Subsequent selections of furnishings and medical equipment are to be coordinated with the CID.

2.8.2 Final Submittal . When the design is complete, the Design Agent will submit a copy of the final documents (i.e. drawings, specification, cost estimate, instructions to bidders, etc.) to DMFO. Along with this package, the Design Agent shall provide a memorandum to DMFO certifying that the design has been completed and that all technical requirements and cost criteria approved at the 35 Percent Design stage have been incorporated into the Final Design.

REFERENCES

2a. DoD Instruction 4270.24, "Unspecified Minor Construction, Emergency Construction, and Restoration or Replacement of Damaged or Destroyed Facilities."

2b. Section 2807, Title 10 USC, "Architectural and Engineering Services and Construction Design."

2c. DOD Directive 6015.16, "Department of Defense Policies for Planning Fixed Military Health Facilities."

2d. DoD Directive 4245.8, "Value Engineering."

FIGURE 2-2
DESIGN FUNDS STATUS REPORT

			CONCEPT PHASE			FINAL PHASE		
PROJECT	AUTH DES %	ACT DES %	EST 0-35% COST	OBGL DMFO FUNDS	0-35% FUNDS LEFT	EST 35-100% COST	OBGL DMFO AMT	35-100% FUNDS LEFT

FIGURE 2-3
PROJECT STATUS REPORT

PROJECT: FY: ____ NUMBER: _____ USING SERVICE:_____ LOCATION: _____

TITLE: _____

FUNDS: Programmed Amount (PA):

DESIGN	CONSTRUCTION	CONTINGENCY
DDA:	AWARD CWE:	STARTING TOTAL:
CWE:	CURRENT CWE:	CHANGES TO DATE:
		PENDING CHANGES:
		REMAINING BALANCES:

STATUS: DMFO AUTH: _____ LEVEL OF DESIGN (%): _____ CONSTRUCTION COMPLETE (%): SCH._____ ACT._____

EVENT	SCHEDULE DATE	ACTUAL DATE	REMARKS
2807 NOTIFICATION			
A-E SELECT AUTHORITY			
A/E SELECTION COMPLETE			
DEFTAB SUBMIT TO DMFO			
DEFTAB APPROVED BY DMFO			
35% DESIGN AUTHORITY			
AWARD A/E CONTRACT			
A-E SUBMITS S-1			
A-E SUBMITS S-2			
S-2 SUBMITTED TO DMFO			
DMFO S-2 REVIEW COMPLETE			
A-E SUBMITS S-3			
A-E SUBMITS S-4			
35% SUBMITTED TO DMFO			
35% APPROVED BY DMFO			
100% DESIGN AUTHORITY			
A-E SUBMITS 65%			
A-E SUBMITS 100%			
A-E SUBMITS FINALS			
REQUEST ADVERTISE AUTH.			
ADVERTISE AUTHORITY			
BID OPENING			
AWARD AUTHORITY			
CONST. CONTRACT AWARD			
BENEFICIAL OCCUPANCY			

ISSUES:

FIGURE 2-4
MILCON FUNDS STATUS REPORT

PROJECT TITLE/LOCATION	PA	SUBALLOCATED FUNDS	AWARD CWE	AWARD SAVINGS

FIGURE 2-5
Instructions for Preparing Gross Area Tabulation.

This is the square meter (foot) quantity number used on the project DD Form 1391. The gross area documentation consists of calculation and tabulation of the building gross floor area illustrated with small scale, single-line dimensioned drawings as demonstrated in the attached figure. The following procedures will be used to calculate the gross building area.

a. The gross area includes the total area of all floors with a floor-to-ceiling height of 2134 mm (7 ft) or greater, including basements, mezzanines, penthouses, mechanical and electrical spaces, enclosed loading docks, and ambulance garages. Gross area is measured from the exterior surfaces of all enclosing walls except where the exterior wall surface overhangs the exterior window surface by one foot or more. In this case, the gross area is measured from a point one-half the distance between the exterior plane of the window glazing and the outermost plane of the wall.

b. The following spaces are counted as one-half of the actual gross area:

(1) Exterior balconies and porches.
(2) Covered but not enclosed walks, passageways, ramps, ambulance shelters, and entry canopies.
(3) Exterior open stairs (covered or uncovered).

c. The following shaft type elements are counted in the gross area of one floor only: atria, unenclosed floor openings, stairs, escalators, elevators and lifts, mechanical and electrical shafts, and other shafts connecting two or more floors.

d. The following areas are not counted in the gross area: spaces with less than seven foot floor-to-ceiling height; exterior insulation applied to an existing building; exterior, uncovered, unenclosed terraces, ramps, stoops, and pads; open courtyards; utility tunnels; equipment yards; and crawl spaces. Crawl spaces with a clear height of seven feet or greater are not counted in the gross area provided the clear height of seven feet and greater is the result of the natural site terrain or foundation construction.

e. The gross area for site and supporting facilities, such as the central utility plant, pump house, and utility buildings, which are not included in the Program For Design is tabulated separately from the main building gross area tabulation. The gross area of all site and supporting facilities which are identified in the Program for Design is accounted for in the main building gross area tabulation.

f. A separate tabulation is required for the mechanical area. This tabulation will include the net area of all mechanical, electrical, and telecommunication rooms and utility shafts. Walls, partitions and structural elements associated with these spaces are included in the general gross area not the mechanical area. Vertical circulation spaces, such as elevators, escalators, lifts, stairs, and trash chutes, are counted in the general gross area not the mechanical area. Mechanical, plumbing, electrical, and telecommunication shafts are counted in the mechanical area.

Example of Gross Area Tabulation

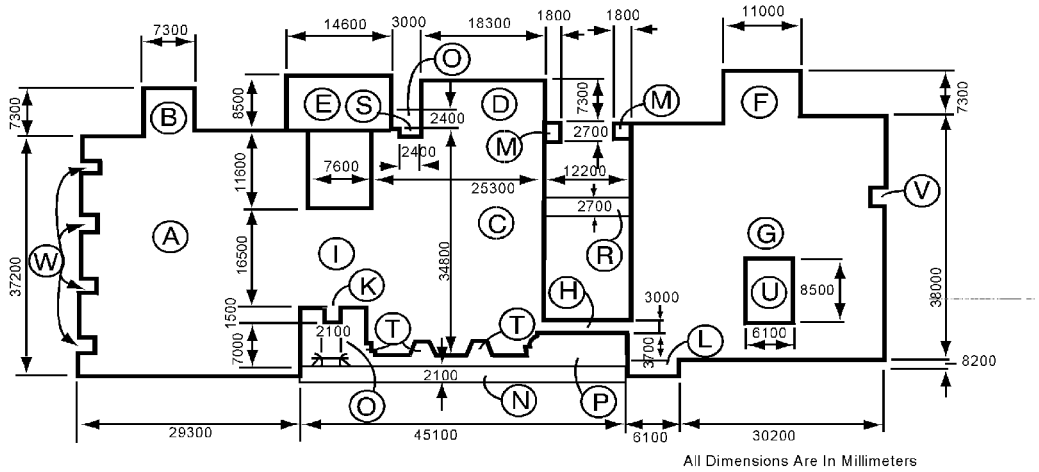

GROSS AREA TAKE-OFF

Plan Area Reference/Type		Plan Dimensions			Scope	GSM
A	bldg. space	29300	x 37200	x	1.0	1089.96
B	"	7300	x 7300	x	1.0	53.29
C	"	25300	x 34800	x	1.0	880.44
D	"	7300	x 18300	x	1.0	133.59
E	"	8500	x 14600	x	1.0	124.10
F	"	7300	x 11000	x	1.0	80.30
G	"	36300	x 38000	x	1.0	1379.40
H	"	3000	x 12200	x	1.0	36.60
I	"	7600	x 16500	x	1.0	125.40
K	"	1500	x 2100	x	1.0	3.15
L	"	700	x 6100	x	1.0	4.27
M	entry canopy	1800	x 2700x2	x	.5	4.86
N	covered walk	2100	x 45100	x	.5	47.35
O	"	2100	x 7000	x	.5	7.35
P	"	2100	x 3700	x	.5	3.88
Q	covered porch	2700	x 3000	x	.5	4.05
R	covered walk	2700	x 12200	x	.5	16.47
S	covered porch deduct	1200	x 2400	x	-.5	-1.44
T	alcove deduct	1700	x 1800x3	x	-1.0	-9.18
U	courtyard deduct	6100	x 8500	x	-1.0	-51.85
V	alcove deduct	1200	x 2400	x	-1.0	-2.88
W	"	1200	x 1800x4	x	-1.0	-8.64
First Floor Total Gross Area						3920.47

FIGURE 2-5

FIGURE 2-6

NET AREA TABULATION

The net floor area of a space is measured from the interior surface of the walls that enclose the space. Exterior walls, interior partitions, columns, structural members, and internal circulation space for other than individual occupancy(ies) are excluded from the net floor area.

Provide a tabulation of net areas, by room, in thirteen columns as follows:

a) Room Code Number From Program For Design (PFD),
b) Functional title of room,
c) Number of rooms,
d) Net area of room from Program For Design,
e) Total net space programmed for rooms [Product of cols.(c) x (d)],
f) If Add/Alt - allocated to unaltered existing space,
g) If Add/Alt - allocated to altered existing space,
h) If Add/Alt - allocated to new space,
i) Net individual room areas as designed,
j) Difference between program and design [columns (i) minus (d)],
k) Percent variation between program and design [cols (j)/(d)x100%],
l) Notes. Provide justification if the deviation listed in k) is more than 10 percent. Rooms of 15.24 m^2 (50 ft^2) or less are exempt from the 10 percent justification process. The justification is to indicate why the deviation was made, not just who authorized it. As a minimum, the spaces considered irreducible are Operating Rooms, Examination Rooms, Treatment Rooms, Provider's Offices, Emergency Rooms, Dental Treatment Rooms, Labor Rooms, Delivery Rooms, Diagnostic and Therapeutic Radiology Rooms, and Patient Bedrooms/Toilets. Depending on function and mission, there may be other rooms identified by the using Military Department which will be identified as irreducible, and,
m) Provide a total summary of each column.

After the above is accomplished, prepare a Net to Gross ratio in the same format as provided in the Program For Design (PFD).

FIGURE 2-6 (continued)

NET TO GROSS SQUARE METER (GSM)[1] CALCULATIONS

FACILITY W/O HARDENING
NEW/REPLACEMENT PROJECT

ALLOWANCES/CATEGORIES

	MEDICAL/ DENTAL CLINICS	AMBULATORY HEALTH CARE FACILITIES	STATION/ COMMUNITY HOSPITALS	REGIONAL MEDICAL CENTERS
TOTAL NSM[2]	NSM	NSM	NSM	NSM
MECHANICAL	11.0% of NSM	13.0% of NSM	14.0% of NSM	16.0% of NSM
CIRCULATION	41.0% of NSM	41.5% of NSM	42.0% of NSM	46.0% of NSM
WALLS & PARTITIONS	14.0% of NSM	15.0% of NSM	15.5% of NSM	15.5% of NSM
HALF AREAS	1.5% of NSM	1.5% of NSM	1.5% of NSM	1.5% of NSM
FLEXIBILITY	1.0% of NSM	1.0% of NSM	1.0% of NSM	1.0% of NSM
TOTAL GSM	168.5% of NSM	172.0% of NSM	174.0% of NSM	180.0% of NSM

NOTES:

1. GSM = Gross Square Meter
2. NSM = Net Square Meter
3. For hardened facilities, increase walls & partitions allowance by 1.0%; and half areas allowance by 2.0%.
4. For addition/alteration projects, up to 15% of the gross total alterable space may be added to the flexibility allowance to offset physical constraints in the existing facility. Gross alterable space is defined as the existing net space, interior partitions, departmental circulation, and mechanical spaces within the departmental/functions included in the Program for Design, plus general circulation immediately adjacent to the affected departments/functions. This increased allowance, which for programming and planning purposes will be considered to be new or addition scope, must be validated during design.

SECTION 3: SITE DEVELOPMENT

3.1 General. This section provides guidance on siting of facilities. Each new facility or addition will be sited in conformance with an approved installation master plan developed by the using Military Department and coordinated with the using Military Department's Surgeon General advocate, i.e., the U.S. Army Health Facility Planning Agency, the U.S. Air Force Health Facilities Office, and/or the U.S. Navy Bureau of Medicine and Surgery.

3.1.1 Community Planning. Siting of facilities shall consider the planning goals and objectives of the surrounding community in order that a harmonious future relationship may exist between the facility and the community. Such planning is to be coordinated in compliance with Executive Order 12372, "Intergovernmental Review of Federal Programs" (reference 3a) as implemented by DoD Directive 4165.61 (reference 3b).

3.2 Site Design. In siting facilities, emphasis should be placed on operation, function, energy efficiency, safety, aesthetics and preservation of natural site characteristics. Spacing of buildings should allow for natural light, air circulation and fire safety. Parking, pedestrian access, and vehicular traffic also require careful consideration.

3.2.1 Topography and Natural Resources. A conscious and active concern for the value of topography and natural resources should be considered in the siting of facilities in accordance with DoD Directive 5500.5 (reference 3c). Natural site features such as ground forms, water, rocks, ledges, trees, and others are to be preserved and utilized in the design to the greatest extent feasible.

3.2.2 Orientation of Buildings. Views from buildings or from key location on the site should be used to take advantage of desirable vistas of the surroundings. Such views are especially important for the patient in the bedrooms of nursing towers. Views from roads, walkways, and other site vantage points, coupled with effective signage and properly aligned walks, provide an important frame of reference for orientation and direction of visitors, patients, and other personnel.

3.2.3 Appearance. Meters, poles, transformers, vaults, pressure reducing station piping and valving, and other utility items are to be located so that they do not detract from the building's appearance. Design should also reduce the negative visual impact of utility items and communication lines in accordance with the Joint Service Manual TM 5-803-5, NAVFAC P-960, AFM 88-43 (reference 3d).

3.2.4 Restrictions. Land use restrictions dealing with runway clearances, helipad planning, aircraft noise, and use of airspace are to be applied to the site location with MIL-HDBK-1190 (reference 3e).

3.2.5 Hazards and Nuisances. Hazard and nuisance effects, both on and off the site, such as excessive noise, odors, smoke, dust, etc., should be considered during site design. Corrective action to diminish any adverse effect of such conditions, including proper orientation, grading, provision of planting screens, fencing, etc., should be planned in advance.

3.3 Construction in Floodplains or on Wetlands. The construction of facilities in floodplains and wetlands is not recommended but is permitted provided the provisions of MIL-HDBK-1190 (reference 3e),

Executive Order 12372 (reference 3a), DoD Directive 4165.61 (reference 3b), Executive Order 11988 (reference 3f), Executive Order 11990 (reference 3g), 43 FR 6030 (reference 3h), Title 44, CRF 59-79 (reference 3i), Executive Order 11514, Executive Order 11991 (reference 3j), Public Law 91-190 (reference 3k), DoD Directive 6050.1 (reference 3l), and Chesapeake Bay Protection Act (reference 3m) are all met.

3.4 Planning Procedures for the National Capital Region (NCR). Planning for all facilities in the NCR shall comply with MIL-HDBK-1190 (reference 3e) and OMB circular A-11 (reference 3n). Master plans for facilities in the NCR shall be sent to the National Capital Planning Commission (NCPC) or The Commission of Fine Arts (CFA), or both, as required by the policies issued by the Commissions. The National Capital Region is defined as the District of Columbia; Prince Georges and Montgomery Counties in Maryland; Arlington, Fairfax, Loudoun, and Prince William Counties in Virginia; and all cities and towns within the outer boundaries of the foregoing counties.

3.4.1 Projects normally are not advertised for bids prior to resolution of any serious objections by either Commission. Requests for exceptions are to be submitted to DMFO together with a statement on the special circumstances involved.

3.4.2 The Military Departments and Defense Agencies are to establish a day-to-day staff working relationship with the NCPC and the CFA to ensure expeditious handling of the reviews.

3.4.3 The provisions of OMB Circular A-11 (reference 3n) require the annual submission of five-year construction budget proposals to NCPC by the Military Department and Defense Agencies.

3.5 Energy Concerns. Orient buildings on the site to decrease energy consumption within the constraints of the functional requirements, the topography, and the site configuration while at the same time enhancing natural daylighting. Consider effect of local sun angles and wind conditions when orienting building on the site. The use of renewable energy resources and the design and siting impacts of recycling policies should also be included in the siting considerations. See Section 7.

3.5.1 Winds. In harsh climates and areas of consistently high or changing winds, building entry points must be designed to compensate for these adverse conditions, including snow. Consider prevailing and seasonal wind conditions where locating energy plants, incinerators, trash and trash collection points, and exhaust vents in relation to air intakes to minimize contamination of the site and building.

3.6 Accessibility for the Disabled. All facilities shall be accessible to the disabled in accordance with guidance provided in Section 12.

3.7 Security Fencing. Limit the use of fencing to enclose and separate areas within a medical complex to those conditions requiring security or the protection of life, separation of a construction site from operational facilities, isolation of a hazardous area, or as stipulated by the individual using Military Departments. (See Section 14).

3.8 Landscape Planting. Provide plant materials (grass, trees, shrubs) and irrigation system(s) as an integral part of the design as appropriate for each type of facility. Use low maintenance plants which are indigenous to the area. Existing mature trees and vegetation should

be retained whenever practical. Develop the landscape design to optimize wind protection for the building and especially entry points where feasible. The costs of such planting(s) should be included in the funding of the facility. These subjects are addressed in detail in the Joint Service Manual TM5-803-5, NAVFAC P-960, and AFM 88-43 (reference 3d).

3.8.1 Sidewalks. Sidewalks are to be designed to provide convenient and safe pedestrian access and necessary circulation. The width of walks is to be based on pedestrian traffic volume, accessibility requirements, and code requirements. The grades of walks will normally follow the natural pitch of the ground except at locations where physically disabled access is required.

3.9 Soil Conditions. Soil and foundation conditions shall be investigated to assure suitability for economical excavation, site preparation, building foundations, utility lines, grading, and planting. Bearing capacity tests are to be made to assure stable and economical foundations for buildings and other structures. The Design Agents are responsible for supplying or contracting for appropriate information early in the design process.

3.10 Siting of Utilities. Provision of utilities essential to efficient operation and of adequate size to serve future facilities requirements shall be considered in the early planning stages to avoid conflicts in the design and layout of the various utility lines and the early recognition of the need for additional production and/or supply capacity. All facility projects should specifically address the adequacy of existing utilities support and include any additional needs. Planning of utility lines should minimize utility easements, capital investments, and maintenance and repair costs. Heat distribution and chilled water lines should be located in concrete shallow trench systems. They should be separated to minimize heat transfer.

3.10.1 Underground Lines. Locate underground utilities to minimize the cost and effort of performing maintenance. Normally, utility lines of all types should not be located under buildings, parking lots, paved terraces, sidewalks, and other paved areas. All underground utility lines, mains, and conduits are to be located at the minimum depth required in accordance with local code, frost line and water table requirements, and, when possible, in common corridors to allow for ready access and maintenance. Utilities should be located to allow for future expansion of buildings.

3.10.2 Storm Drainage. The storm drainage system, including gutters, drains, inlets and culverts, is to be designed to carry the anticipated runoff, including runoff from melting snow. Inlets should be provided where necessary to intercept surface flow. The building up of undeveloped areas may have a noticeable effect on installation drainage facilities; major alterations or extensions to storm sewers and drainage channels may be required because of the location and design of new facilities.

3.10.3 Water Service. Provide a water service loop with proper valving to maximize reliability. Critical facilities, as designated by the using Military Department, shall be served by two water lines from separate sources where feasible.

3.10.4 Sanitary Sewer. New building elevations shall be coordinated with the existing sanitary sewer elevation to avoid the need for ejection pumps where feasible.

3.11 Vehicular and Pedestrian Circulation.

3.11.1 Street System. Design of the street system within each project area is to be coordinated with the overall traffic circulation plans for the installation as well as the adjacent road system. Provide convenient and safe vehicular access and circulation for essential services, such as deliveries, trash and garbage collection, fire protection, and maintenance and repair. Through traffic should be kept to a minimum.

3.11.2 Separate Access. Provide separate roads, if feasible, from the site entrance to emergency services, to patient parking, and to support service areas. An additional road may be required from the helipad to emergency services.

3.11.3 Ambulance Traffic. Where possible, ambulances are to be provided with a separate, dedicated route to the emergency entrance from the nearest primary arterial roadway.

3.12 Parking Facilities. Ninety degree offstreet parking provided is preferred for both organizational and non-organizational vehicles. Parking areas should be coordinated with the location of underground utility services. In the interest of the economy and efficiency of land, joint use parking may be considered where feasible. Where relatively large lots are unavoidable, the natural terrain features and allocation of natural tree islands should be combined effectively to relieve the unfavorable view. When mature trees or vegetation exist on a site, every reasonable effort should be used to integrate them into parking areas. Criteria and allowances for parking spaces for non-organizational vehicles are to be in accordance with Table 3-1 (reference 3o).

3.12.1 Parking Structures. Parking structures or garages will be considered when the site is too small to accommodate required parking, when the value of the land is excessive, when the site is located in a harsh climate, or when the required amount of parking spaces creates and oversized area with extreme walking distances. DMFO will approve parking structures on a case-by-case basis.

3.12.2 Ambulance Shelters. Ambulance shelters in the form of a garage or carport are authorized as part of a facility as follows:

3.12.2.1 Ambulance Garage. A garage may be provided at installations where the heating design temperature on the 97.5 percent dry bulb basis is less than -12 ºC (11 ºF).

3.12.2.2 Ambulance Carport. A carport may be provided at installations where the air conditioning design temperature on the one percent dry bulb exceeds 31 ºC (87 ºF).

3.12.2.3 Design Temperatures. All building design temperatures shall be obtained from the Tri-Service Manual, Engineering Weather Data, AFM 88-8, chapter 6; TM 5-785; or NAVFAC P-89 (Reference 3p).

TABLE 3-1
AUTHORIZED PARKING SPACES FOR
MEDICAL AND DENTAL TREATMENT FACILITIES

HOSPITALS AND OUTPATIENT FACILITIES (.59)(X1)+(.21)(X2)+(X3)+(X4)+(X5)

X1 = All personnel working in the Medical Treatment Facility on a full time basis, minus the Dental staff (see X4), plus an allowance for visitors and part-time staff. Include FTE's, contract maintenance, Red Cross volunteers, base exchange, clergy, interns, technical school trainees, VA, other Military Department liaison staff, Reserve, Guard, PME and visitors (i.e., Commander, CHAMPUS, RMO Security, Fire Department Consultants, Salespersons, etc.) and shift change overlap. (Use 10 percent if statistics otherwise unavailable for additional visitors, shift overlap, and part-time staff).

X2 = Average daily outpatient workload for "peak month" using 21 workdays per month and 250 workdays per year as a basis for calculation. Workload to be used in calculation is all outpatient visits to clinics plus outpatient O.T, P.T., immunizations, physicals, inhalation therapy, EEG's, ECG's plus a 10 percent factor for pre-admission testing and paperwork, pharmacy visits (including refills), environmental health, records retrieval, partnership program visits, education programs (birthing, smoking, nutrition), "drop-in" check-ups, school physicals, appointments, DEERS checks, meeting with family members in conjunction with a facility "visit", etc.

X3 = One space for each patient bed. (Do not include in free standing, Outpatient Medical Treatment Facilities or Dental Facilities calculations which are not co-located with an inpatient facility (CMTF).

X4 = Dental Clinic (both free-standing and as a part of another facility (CMTF)). Three spaces per dental treatment room (DTR).

X5 = One space for each organizational vehicle.

Notes:

1. This formula should be used as a guide. Additional parking spaces need to be justified.

2. Carpooling, "Reserved" spaces for Command, General Officers, Rewards, and Disabled are included in the above factors.

3. Spaces for Disabled as required in Section 12. These spaces are included in and broken out from the above total and designated per Section 12 for both in-patient and outpatient facilities. Spaces for Disabled are to be allocated per Section 12 standards proportionally for both inpatient and outpatient requirements as applicable.

4. Calculations may be adjusted for public transportation (if reliable and available within reasonable walking distance and for Quarters/Housing (if within reasonable walking distance).

5. Parking lot segregation for staff, patients, and visitors will be addressed by respective Military Departments during design.

REFERENCES

3a. Executive Order 12372, "Intergovernmental Review of Federal Programs," July 14, 1982, 47 Federal Register 30959.

3b. DoD Directive 4165.61, "Intergovernmental Coordination of DoD Federal Development Programs and Activities," August 9, 1983.

3c. DoD Directive 5500.5, "Natural Resources--Conservation and Management," May 24, 1965.

3d. Joint Service Manual, TM 5-803-5, NAVFAC P-960, AFM 88-43, "Installation Design," March 1, 1981.

3e. MIL-HDBK-1190, "Facility Planning and Design Guide," 1 September 1987.

3f. Executive Order 11988, "Floodplains," May 24, 1977.

3g. Executive Order 11990, "Protection of Wetlands," May 24, 1977.

3h. 43FR6030, "Floodplain Management Guidelines," February 10, 1978.

3i. Title 44, CFR 59-79, "National Flood Insurance Program."

3j. Executive Order 11514, "Protection and Enhancement of Environmental Quality," March 5, 1970 (as amended by Executive Order 11991, May 24, 1977).

3k. Public Law 91-190, "National Environmental Policy Act of 1969," January 1, 1970.

3l. DoD Directive 6050.1, "Environmental Effects in the United States of DoD Action," July 30, 1979.

3m. Chesapeake Bay Protection Act

3n. OMB Circular A-11, "Preparation and Submission of Budget Estimates," May 27, 1979.

3o. MTMC Report 74-28, "Traffic Generations at Military Medical Facilities," Military Traffic Management Command Transportation Engineering Agency, September 1974.

3p. "Engineering Weather Data," Tri-Service Manual AFM 88-8, Chapter 6; TM 5-785; or NAVFAC P-89.

SECTION 4: ARCHITECTURAL

4.1 General. This section provides architectural design guidance. All facilities should employ an economical, completely functional architectural design. Designs are to be closely governed by standard healthcare, DoD, and Military Department specific functional requirements and the criteria specified herein.

4.2 External Design. Designs shall be compatible with the context of the site and existing adjacent buildings. Colors, textures, and the forms of existing buildings or other site features must be considered. Adhere to applicable installation design guidance.

4.2.1 Building Exteriors. Exteriors (elevations) shall conform to or be compatible with the styles of previously constructed permanent facilities of the region, station, base, or post, governing Historic Preservation Societies and established design guidance. To ensure compatibility, observe and document during the site visit the physical features of the site and the character and style of any surrounding building(s). Develop elevations based on interior departmental functional relationships and requirements, and where possible, by taking advantage of existing or developed site assets.

4.2.2 Building Materials. Exterior enclosure shall meet engineering standards with respect to the environment, energy use, materials, and methods of construction. In selecting building materials, careful consideration should be given to technical criteria and the requirement for high durability and minimal maintenance.

4.2.3 Roof Considerations.

4.2.3.1 Roofing system(s) are to be compatible with structural framing system, readily repairable, and designed to provide a complete, waterproof roof. The system is to be durable, require minimal maintenance, and provide the fire ratings and classifications required by MIL-HDBK 1008 (reference 4a).

4.2.3.2 Design roof slope(s) no less than 21 mm/m (1/4 inch per foot).

4.2.4 Solar Shading. Where air conditioning is not required, adjustable blinds may be used to eliminate direct sunlight glare. In climates where air conditioning is required, solar shading should be accomplished by using solar shading screens or baffles, recessing the exterior windows, light-reducing glass, heat-absorbing tinted glass, reflective glass, adjustable blinds, or combinations of these materials so as to provide the most desirable and economical solution. Provide a life-cycle cost effective approach to shading of exterior window areas that is compatible with the comfort required in the working areas, and the aesthetics of the building.

4.3 Internal Design. Factors that affect the quality of a space such as changes of daylight, the movement of air, changes of temperature, sights and sounds, of human activity, spatial variety, material selection and colors, and graceful proportion must be considered in terms of their therapeutic effects.

4.3.1 Layouts and Function. Building and departmental floor plan layouts should be simple and functional. Avoid narrow or irregular floor shapes. Locate permanent plan elements, such as mechanical shafts, stairways, and

utility rooms, to minimize their impact on functional use areas or future expansion of critical areas.

4.3.2 Program for Design. Use the DMFO-approved Program-For-Design (PFD) to allocate space assigned to a facility. Modifications must be approved by DMFO.

4.3.3 Functional Planning and Future Expansion. Relocation of departments having least first-cost is a valuable mechanism for accommodating change. Expansion of expensive existing departments can often be coupled with relocation of lower cost functions. Placing departments on outside walls with adjacent site space available for expansion also adds future flexibility. Open plans, where feasible, allow easy departmental change. Avoid floor plans that encircle a department with permanent corridors, stairs, mechanical rooms, or other building elements difficult to relocate. Reference Section 3, paragraph 3.10.

4.3.3.1 Pursue the grouping of functional elements in accordance with the following objectives. Where difficulties arise in the mutual accommodation of all of the following objectives, the objective stated in subparagraph a) below shall be given priority.

a) Where appropriate combine elements on the basis of functional adjacency requirements to facilitate better functional flow and reduced operating and staff costs.

b) Combine departments and functions with similar fire code requirements where feasible. For example, the assembly of all outpatient clinical elements which do not serve nonambulatory patients can be constructed to a lower cost as a "business occupancy" rather than the higher cost of a "health care occupancy."

c) Combine elements with similar electrical, mechanical, and structural requirements to facilitate savings in construction costs.

4.3.3.2 Consistent with proper functional adjacency planning, soft-functional areas (areas having minimal plumbing), special finishes, special mechanical features, and special power demands) should be placed between hard-functional areas (areas having appreciable plumbing, special finishes, special mechanical features, and special power demands) to permit future growth of the hard-functional areas by relocation of the less costly soft-functional areas.

4.3.3.3 Assure column-free functional areas where possible. Provide vertical column compatibility in multi-story facilities. Also see Section 6 for seismic considerations.

4.3.3.4 Design utility areas for electrical, mechanical, plumbing, and other support systems in such a manner as to permit modifications in support of medical functional changes with the least life-cycle-cost and least disruption to the overall operations. Locate utility areas for cost effective connections to site utilities and efficient distribution to functional areas. Provide adequate space for required safety clearances and for maintenance and repair. See Section 10.

4.3.4 Atriums. Properly designed atriums improve aesthetic conditions, provide natural light to interior patient rooms and establish an environment providing psychological benefits to patients, staff, and visitors. The incorporation of an atrium into the design of a multi-story

facility has the potential for reducing initial capital investment, construction costs, and associated energy costs.

4.4 Circulation.

4.4.1 Separation of Traffic. In a multi-story medical facility, elevators are a principal axis of personnel, patient, and materiel movement. To reduce the mixing of supplies, visitors, staff, and patients, access to and location of different types of elevators should be considered. The objectives of separation are to decrease cross contamination, minimize disturbance of patients, and organize traffic patterns. See Section 17, Transportation.

4.4.2 Circulation Patterns.

4.4.2.1 Provide adequate circulation space at points of traffic congestion. Provide architectural features that emphasize overall circulation patterns and major entrances to departments.

4.4.2.2 Make circulation more efficient by avoiding: confusing hallway systems and extension of through corridors from department to department; horseshoe shape in major corridor systems that require excessive walking distances; and dead end departmental corridors.

4.4.2.3 Minimize the use of single loaded corridors.

4.4.2.4 Locate vertical transportation element(s) to be immediately visible and accessible from the major entrances.

4.4.2.5 Main circulation corridors in health care occupancies should be at least 2400 mm (8 feet) wide exclusive of Lobbies and elevator vestibules unless otherwise directed. Minimum corridor widths must comply with NFPA 101 (reference 4b) requirements. Generally, minimum corridor widths shall be 1700 mm (5 feet 6 inches) and 2400 mm (8 feet) depending on loading and code requirements.

4.5 Floor-to-Floor Heights. Determination of finished-floor to finished-floor heights is a multi-disciplinary task. Special attention must be given to mechanical requirements and clearances. Adequate space shall be provided above finished ceilings for the coordination and placement of such building systems as mechanical, electrical and communications distribution systems, unique structural considerations and utility piping systems. Elements requiring special ceiling heights should be grouped on the least number of floors consistent with proper functional design. See Appendix A and Section 19.

4.5.1 Underfloor or Crawl Spaces. Limit crawl spaces or underfloor areas to less than 2130mm (7 feet) in height, see Section 2, figure 2-7.

4.6 Exterior Wall Design.

4.6.1 Materials and Assemblies. Select materials that are durable, require low maintenance and are compatible with applicable criteria.

4.6.2 Evaluate the design characteristics of walls as they relate to construction and control joint locations, considering impact on sterile areas, construction sequence, and building movement due to expansion and contraction.

4.6.3 Climate Factors. Climate data establishes performance requirements for thermal design of exterior walls. Use overall composite heat transfer or "U" factors in conjunction with local climatological data. Composite "U" factors must conform to criteria in Section 7, Energy Conscious Design and Section 8, HVAC.

4.6.4 Thermal Resistance. Obtain the thermal characteristics of single materials or wall assemblies from the American Society of Heating, Refrigeration and Air-Conditioning Engineers (ASHRAE) Handbook of Fundamentals (reference 4c) or from manufacturer's certified technical information. Identify thermal resistance (R) values for each element in the building shell. Prepare "U" factor calculations following recommended procedures as documented in the ASHRAE Handbook of Fundamentals (reference 4c). Use thermal transmission values prescribed in Section 7, Table 7-1.

4.7 Fenestration and Windows.

4.7.1 General. Design fenestration in accordance with National Fire Protection Association (NFPA) codes, HVAC requirements, and aesthetic appearance. MIL-HDBK-1190 (Reference 4d) contains provisions for natural light and ventilation and prescribes minimum glass areas to achieve those provisions in certain facilities but establishes maximums only for locations designed for less than -18 ºC (0 ºF) winter design temperature). Design must provide for window cleaning and maintenance.

4.7.2 Required Locations. Exterior windows must be provided in normal nursing care, Intensive Care, and Cardiac Care bedrooms, Prosthodontic Dental Treatment Rooms (nontinted), and Prosthodontics-Ceramics Laboratories (nontinted). Natural lighting may be provided in Dermatology Clinics, if required by the using Military Department.

4.7.3 Patient Bedroom Windows. Provide windows in patient sleeping rooms in accordance with NFPA-101 (reference 4b). Hardened or protected facilities may require a waiver to this requirement.

4.7.4 Glazing for Impact Safety. Comply with the requirements of ANSI Z97.1 (reference 4e), NFPA 80 (reference 4f) and NFPA 101 (reference 4b). Sill heights less than 760 mm (30 in) above the finished floor must have an intermediate horizontal mullion, or suitable alternative, included in the fenestration at that height.

4.8 Interior Construction.

4.8.1 Component Evaluations. Select interior components and their related construction details based on initial cost, life expectancy, housekeeping and maintenance costs, and aseptic characteristics, as applicable. Normally used materials, including their correlation and standard abbreviations are indicated in Appendix A.

4.8.2 Aseptic Environments. Selection of interior construction and finishes must consider the need for aseptic environments. Use smooth, nonporous, seamless materials, recessed cabinets with radiused inside corners to minimize contamination and reduce housekeeping requirements. Smooth, seamless wall and floor coverings facilitate cleaning. As a minimum, the following areas shall be designed for ease of housekeeping with elimination of materials or surfaces which could harbor contamination, and to minimize maintenance requirements.

a) Oral Surgery Rooms, Dental Treatment Rooms.

b) Special Procedure Rooms - Cardiac Catheterization, Angiography, Endoscopy, etc.

c) Operating and Delivery rooms.

d) Emergency and Trauma Rooms.

e) Decontamination rooms in Surgery, Delivery, and Central Processing and Distribution (CP&D).

f) Sterile Storage (Surgery, Delivery, CP&D).

g) Substerile and Recovery (Surgery and Delivery).

h) All Patient Treatment Rooms.

4.9 Floors.

4.9.1 Design floors to accommodate different types of wheeled conveyances and to be devoid of abrupt changes in elevation. Maintain constant floor elevation throughout for safety and ease of movement of wheeled equipment. Avoid raised thresholds, steps and ramps. Recess all expansion joint cover plates flush with the finished floor. Provide floor depressions to accommodate cart washers, floor loading sterilizers, radiographic electrical floor duct, walk-in prefabricated units, computer rooms, high density shelving, and other embedded equipment.

4.9.2 Floor Finishes.

4.9.2.1 Floor finishes shall be as indicated in Appendix A.

4.9.2.2 Limit use of carpeting to those areas specified in Appendix A.

4.10 Wall and Partition Systems. Limit partition systems to masonry or steel stud with gypsum wall board systems. Construct partition systems with noncombustible materials and design them to conform to applicable portions of the National Fire Codes. Select systems which permit modification with the minimum cost and difficulty within acoustical and fire criteria except in areas subject to severe impact. See Appendix A.

4.10.1 Barriers. Design protective barrier partitions to protect occupants or equipment in rooms, spaces and compartments from fire, smoke, radiation exposure, electrical interference, MRI shielding, etc. or for physical security purposes. Reinforced masonry or concrete partitions are desirable around areas where the physical security of valuables or drugs is required. (See Section 14.)

4.10.2 Protection. Use bumper guards on walls in areas subject to frequent abrasion and impact such as corridors, utility rooms, central processing and distribution (CP&D), gurney storage, and others. Mechanically mount bumper guards to appropriate wall blocking where steel stud partitions are used and extend outward from the wall to afford the needed protection. Provide corner guards at outside corners of walls, corridors, and in areas and rooms subject to damage by mobile equipment. Design corner guards to extend from the floor to the finished ceiling. Masonry partitions also require corner guards. Do not use bullnosed masonry corner units.

4.10.3 Reinforcement. Wall partitions require additional reinforcing for positive attachment of surface-mounted items such as casework, wall bumpers, toilet accessories, and other equipment.

4.11 Ceilings. Select a ceiling system based on initial cost, surface visual appeal, resistance to moisture, fire resistance rating, lighting, HVAC outlets, security, maintenance, and acoustic characteristics--see Appendix A.

4.11.1 Support. Use of suspended ceiling surfaces for the direct support of intravenous infusion tracks or cubicle curtain tracks is not acceptable. Ceiling-mounted accessories shall be secured through the ceiling to secondary support members. Use universal suspension systems in all radiographic rooms--see Section 16 and Appendix C (Universal X-Ray Room).

4.11.2 Utility Access. Provide maximum accessibility in corridor ceilings to the mechanical and electrical distribution systems. Do not use concealed-spline ceiling systems requiring special tools to lower tile assemblies. Color-code the access panels into ceiling plenums with tabs to identify the type of utility present.

4.11.3 Moisture Protection. When acoustic treatment is required in the presence of high levels of moisture, use plastic-faced acoustic tiles.

4.11.4 Ceiling Heights. Maximum ceiling heights shall be as indicated in Appendix A.

4.12 Interior Finishes. Interior finishes shall be as indicated in Appendix A.

4.13 Vestibules and Doors.

4.13.1 Exterior Vestibules. Vestibules may be provided at exterior entrances. Vestibules shall be of sufficient depth to allow the outside doors to close before the inside doors are opened.

4.13.2 Revolving Doors. Revolving doors may be provided when justified and all code requirements are met. When revolving doors are provided, the NFPA 101 (reference 4b) and accessibility requirements to have normal swinging doors for egress are still required.

4.13.3 Automatic Doors. Electrically-controlled, hydraulically-operated automatic doors should be provided for Emergency Trauma entrances of Medical Treatment Facilities and selected Medical Treatment Facility entrances based on facility size and mission. When functionally appropriate, automatic doors should be considered for interior use on facilities.

4.14. Color Selections.

4.14.1 Color selections shall comply with applicable design guides, and installation criteria.

4.14.2 Coordinate color selection with the quality and quantity of light provided in each space. Color schemes proposed to change existing interiors must not exceed the capability of the existing lighting system to illuminate the colors selected to required brightness levels.

4.14.3 Select all nonproprietary paint colors from a nationally recognized paint manufacturer. Coordinate the colors with the basic architectural finish schedule.

4.14.4 Select colors with regard to their effect on the function of the space. Special consideration must be given to worktops in laboratory areas and maintenance shops where staining from various solutions is a problem.

4.14.5 Select colors and patterns with regard to their impact on the health and welfare of the patient and staff. Color selections should not be complex and colors should be selected with the coordination of all finishes and accessories.

4.15 Signage. Signage includes all visual messages extending from the site boundary to an individual room number. Signage serves three functions: direction, identification, and information.

4.15.1 Exterior Signs. All signs located on the project site shall be included in the Military Construction (MILCON) project.

4.15.1.1 Keep the number of directional signs and the information presented on each sign to a minimum to prevent confusion. Begin directional signs for commonly used major services at campus boundaries and guide a person through decision points to the parking area nearest the entrance needed. Building entrance signs must be visible from that point. Group the information with left-pointing arrows at the top, up-pointing arrows next, and right-pointing arrows at bottom. Always place the Emergency sign at the top of a directional signage group.

4.15.1.2 Provide entrance identification signs for each major entrance to a facility. The sign shall describe the purpose of the entrance, that is, Main Entrance, Clinic Entrance, Dental Clinic, or other specific activity intended to be reached by the public primarily through that entrance. See Section 10 for lighted exterior signs. The Emergency entrance must be marked by an internally illuminated sign in accordance with local area requirements and Department of Transportation standards (reference 4g).

4.15.2 Interior Signage.

4.15.2.1 Directories. Overall directories should be placed in each major lobby area. These list all major services with their room number or area designations. Smaller, less comprehensive directories should be used in less important lobbies such as elevator lobbies on each floor.

4.15.2.2 Directional Signs. Once a person has used the directory and decided the general direction to go, directional signs must guide individuals through decision points and to their destination. As with exterior signs, left-pointing arrows should be placed at the top, up-pointing arrows next, and right-pointing arrows at the bottom. All characters and directional arrows should be easily changeable to provide for future department relocations. When pictographs are used, the pictograph shall be shown left of the verbiage.

4.15.2.3 Identification Signs. Design signs to identify activities for individual rooms. This type may show a pictograph and room number on the header panel with the verbiage on the insert panel. Design patient room identification signs to have the room number on the header panel and

insert panels used for information signage such as No Smoking, Oxygen in Use, Isolation, and No Visitors.

4.15.2.4 Information Signage. These signs provide messages that aid in the daily transaction of business and provide regulation for health and safety. Use these signs to fulfill requirements of OSHA, accessibility and Military Department safety standards. Keep the messages on information signs simple. Use of pictographs to aid in understanding messages is encouraged where feasible.

4.15.3 Room Numbering. Develop a clear, simple and comprehensive numbering scheme with each room having a unique number. Provide a simple, distinct, and different number for groups of rooms within a department such as Examination Rooms, Dental Treatment Rooms, Operating and Delivery Rooms, X-ray Exposure Rooms, and Patient Bedrooms. Alpha characters should be avoided in room number groupings. Make the room numbers used for building maintenance purposes different from those for patient and staff use. Use the room numbering system developed for each room's identification on the project drawings to label each room for the maintenance staff. A small, inconspicuous laminated plastic sign with the room number on it attached to the upper door frame will usually suffice. Do not place this room number on the room identification sign.

4.16 Acoustics. Consider sound source and transmission an integral part of the design and construction.

4.16.1 Appendix A contains parameters of the acoustical environment for each typical space. The acoustical parameters shown on Appendix A include ambient noise level, speech privacy requirements, and special sound transmission requirements.

4.16.2 The two most important acoustical characteristics for each space are the ambient noise level and the sound isolation requirements. The ambient noise level is the level of general background noise existing within a space. Sound isolation defines the degree to which the surrounding construction systems attenuate noise coming from outside the space. The ambient noise level in a space and the sound isolation of the enclosure together define the degree of speech privacy obtained in that space. If either one of these acoustical characteristics is downgraded, the other one must be increased to maintain the same level of privacy.

REFERENCES

4a. MIL-HDBK-1008, "Fire Protection for Facilities Engineering Design and Construction." (latest edition)

4b. NFPA 101, "Life Safety Code," National Fire Protection Association.

4c. American Society of heating, Refrigeration and Air Conditioning Engineers (ASHRAE), "Handbook of Fundamentals", 1993.

4d. MIL-HDBK-1190, "Facility Planning and Design Guide."

4e. ANSI Z97.1, "Glazing Materials Used in Buildings, Safety Performance Specifications and Methods of Test," American National Standards Institute.

4f. NFPA 80, "Standard for Fire Doors and Fire Windows" National Fire Protection Association (NFPA).

4g. Department of Transportation Signage Standards.

SECTION 5: STRUCTURAL

5.1 General. This section provides guidance for the selection of structural system(s) and materials. The system(s) and materials selected for a project shall be: Suitable and cost effective for permanent construction in the locale of the project; capable of carrying the required loads; compatible with fire protection requirements; and compatible with architectural concerns, site utilities, and functional concepts.

5.2 Design Criteria. The structural design requirements, including the load assumptions not otherwise covered herein, shall conform to the using Military Department criteria (references 5a and 5b).

5.2.1 Floor Live Loads. Reference 5a, 5b and Appendix A shall be used for minimum floor live loads for known proposed occupancies. If the proposed occupancy is not known, use design floor live loads that will permit considerable flexibility in accommodating future use of this space.

5.2.2 Wind and Snow Loads. Wind and snow load design methods shall be in accordance with references 5a and 5b.

5.2.2.1 Wind Loads. Design projects for basic wind speeds and their resultant pressures based on "Exposure C" conditions (open terrain with scattered obstructions having heights generally less than 30 feet). Exceptions shall be where it can be clearly established that lesser loads associated with "Exposure B" conditions (towns, city outskirts, wooded areas and rolling terrain) are and will remain applicable, or where greater loads associated with a coastal waterfront site are applicable. Promontory, mountain, hill, and some valley exposures shall be examined for unusual channeling or lifting effects. Where these occur, the design load shall be adjusted accordingly for the unusual exposures listed. Facilities located in areas subject to typhoons and hurricanes shall be designed in accordance with reference 5c and other using Military Department criteria.

5.2.2.2 Snow Loads. Ground snow loads shall be based on the snow load zone maps unless a site specific study or local records indicate a higher value should be used.

5.2.3 Seismic Design Criteria. Seismic design shall conform to the requirements set forth in Section 6 of this manual.

5.3 Protective Construction Criteria. General information is available in reference 5d.

5.4 Soil Investigations. Soil investigations shall be conducted early in design as directed by the Design Agent to enhance recommendations for foundation design. Special considerations for foundations in arctic and subarctic construction areas are contained in reference 5e and other using Military Department criteria. Frost penetration depth shall conform to reference 5a, 5b, and using Military Department criteria.

5.5. Special Design Considerations.

5.5.1 Assure column free functional areas where possible. Provide vertical column compatibility in multi-story facilities. Also see Section 6 for seismic considerations.

5.5.2 Longspan structural construction usually increases flexibility but must be studied in relation to cost effectiveness, the life of the structure, and the probability of functional change.

5.5.3 Metal Building Systems, as defined in reference 5f shall not be used in facilities.

5.6 Additions and Alterations to Existing Facilities. When new functions are to be assigned to the existing structure, a structural investigation of the affected existing building segment(s) including a seismic hazard study according to the requirements given in Section 6 shall be executed to verify that the structure has the capacity to safely support the proposed new occupancy loads. Provision shall be made for a structural stiffening of facilities when new floor loadings are required.

REFERENCES

5a. Joint Army-Air Force Manual, TM 5-809-1, AFM 88-3 Chapter 1, "Load Assumptions for Buildings," May 1992.

5b. Navy Manual, MIL-HDBK 1002/2, "Structural Engineering Loads," September 1988.

5c. Joint Army-Air Force Manual, TM 5-809-11, AFM 88-3 Chapter 14, "Design Criteria for Facilities in Areas Subject to Typhoons and Hurricanes," June 21, 1983.

5d. "Design Criteria for Hardening Medical Treatment Facilities Against Chemical, Biological and Collateral Damage Threats," Omaha District and DMFO.

5e. Army TM 5-852-4, "Arctic and Sub-Arctic Construction: Building Foundation."

5f. Structural Design Criteria for Buildings, TM 5-809-2.

SECTION 6: SEISMIC DESIGN

6.1 General. This section provides seismic design guidelines.

6.1.1 Prevent Collapse. All facilities will be designed to prevent building collapse under seismic forces anticipated for that location and to preclude collapse of equipment or utility systems that would also endanger life. Under this criterion, the facility would have to be evacuated, and post-earthquake operations provided from other sources.

6.1.2 Essential Facilities. Any facility or portion thereof designated by the Department of Defense as "essential" will be designed to ensure serviceability so that post-earthquake operations can be provided from the facility. This includes ensuring that utilities, plant systems, and emergency vehicle access are designed to enable restoration of facility operations without undue delay.

6.2 Design Requirements.

6.2.3 Damage Risk Classification Categories. The damage risk classification (or occupancy) categories stated herein correspond exactly with the classifications in the Joint Services Seismic Design Manuals (reference 6a). These are:

a) Essential Facilities,

b) Hazardous Facilities,

c) Special Occupancy Structures,

d) Standard Occupancy Structures.

These provide the link between the required operational levels and an executable design procedure.

6.2.1 Seismic Design Criteria for New Facilities. The seismic design of new facilities shall conform to the guidance herein and one of the Joint Services Seismic Design Manuals TM 5-809-10, NAVFAC P-355, AFM 88-3 Chapter 13, (reference 6b) or TM 5-809-10-1, NAVFAC P-355.1, AFM 88-3, Chapter 13, Section A (reference 6a).

6.2.2 Seismic Upgrades Criteria for Existing Facilities. The seismic design for upgrade of existing facilities shall conform to the guidance herein or the Joint Services Manual TM 5-809-10-2, NAVFAC P-355.2, AFM 88-3, Chapter 13, Section B (reference 6c).

6.3 Operational Level Criteria. Seismic design requirements for a particular facility depend upon the operation level required following an earthquake. This operational category will be determined by the using Military Department. The following levels of seismic resistance for various facilities are specified with respect to operational mission, disaster preparedness, and medical post-earthquake needs:

6.3.1 Hospitals.

6.3.1.1 Basic Life Safety. This level generally applies to rehabilitation of existing facilities. The most important requirement is to reduce the likelihood of injury or death to personnel by providing a structure which resists collapse. This is the minimum requirement for seismic upgrade of alteration projects for existing hospitals. Structural

systems for existing hospitals will be considered acceptable if they are in substantial conformance with the requirements in the Joint Service Manuals (reference 6a, 6b, or 6c). Substantial conformance is defined as the structure having lateral resistance equal to 80 percent of that required for a new building with supports for mechanical, electrical, architectural, and other non-structural elements spaced at a distance no greater than 125 percent of the spacing required by the Joint Services Manuals for a new building. When an existing structural system does not meet these requirements, it will be strengthened as required. The readily available 10% probability of exceedence in 50-years response spectrum should be used in the analysis and the resulting design load parameters multiplied by the same 80% factor used in the static analysis approach. Anchorage and bracketing of mechanical, electrical, architectural, and other non-structural supports must also be strengthened if they fail to meet this requirement. With this class of structure, the facility requires evacuation, and post-earthquake operations depend upon outside assistance. No specific time is specified for reoccupancy and utilization for this class of structure.

6.3.1.2 Partial. This level provides a higher operational capability then Basic Life Safety and generally applies to rehabilitation of existing facilities in seismic zone 1 and seismic zone 2. If an existing structural system is deficient, seismic strengthening will be required to meet the Essential category seismic zone requirements. To meet this operational level, a portion of existing building must be usable for continued medical care following an earthquake of expected zone severity. However, the facility may be rendered inoperative by structural damage due to an earthquake of greater than expected zone severity. The following areas must fully meet the Essential category design requirements of the seismic zone for structural and non-structural elements: Surgery, Labor/Delivery, Nursery, Intensive Care, Nursing Units, Emergency, Central Material Supply, Radiology, Clinical Laboratory, Supply Storage, Nuclear Medicine, the Emergency Operations Center, Hemodialysis, Respiratory Therapy, Patient Administration (inpatient activities only), Morgue, Building Maintenance and Engineering, and Food Service. Provisions for post-earthquake emergency utility services and emergency vehicle access will be made. In the areas specified, fixed equipment, vertical transportation, and utilities will be anchored, braced, and/or tied down to fully resist design seismic forces, and if damaged or disrupted, will be restorable within several days. Outside the designated areas of existing buildings provide tie-downs, anchorage, and bracing for mechanical, electrical, architectural, and other non-structural supports in accordance with the Essential category seismic design requirements. Outside assistance will supplement on-site care of inpatients and disaster victims while restored portions of the facility are used, and temporary expansion of emergency facilities implemented.

6.3.1.3 Selected/Full:

a) This level provides a higher operational capability than "Partial". It applies to new additions with key health care components (selected) and complete new essential facilities (full) in all seismic zones. Seismic design will be based on the maximum probable seismic ground motion with 10 percent probability of exceeding in a 50-year period that which is predicted to occur at the site.

b) Facilities in this operational category of seismic resistance will be so designed as to be prepared for post-earthquake operations and capable of restoration of minor damage within several hours following the maximum probable seismic ground motion. The facility may be

rendered inoperative by damage due to an earthquake of greater than expected severity. All utilities and equipment must be prepared for isolation and/or restoration with minimum work if damage occurs. Provisions for post-earthquake emergency utility services and emergency vehicle access will be made.

6.3.1.4 Complete: This is the maximum level of seismic resistance for essential facilities. This category generally applies to new construction located in seismic zones 3 and 4 that have been identified as requiring continuous operation both during and after an earthquake. Seismic design will be based on a maximum probable earthquake occurring at the site, with a 10 percent probability of being exceeded in a 100-year period. Design the entire facility for complete continuity of operation, for care of inpatients, and for receiving earthquake casualties. Utilities, plant systems, and emergency vehicle access must provide for complete restoration of the facility to a near-normal interior environment within several hours. All site utilities must be restorable within a four-day period.

6.3.2 Outpatient Clinics and Dental Clinics.

6.3.2.1 For existing freestanding Outpatient Clinics and Dental Clinics, base the maximum requirements for seismic upgrade upon the Basic Life Safety category for hospitals.

6.3.2.2 For new freestanding Outpatient Clinics and Dental Clinics, base the seismic design on the Basic Life Safety requirements in the Joint Services Manuals. When it is determined that the facility is critically needed for receiving and treating earthquake casualties, an Essential design category may be directed.

6.3.2.3 For combined type facilities, i.e., when Outpatient Clinics and Dental Clinics are within the hospital structure, use the hospital seismic design requirements.

6.4 Design Development of New Facilities.

6.4.1 Seismic structural design and siting considerations may conflict with functional considerations in building design. For instance, shear walls or diagonal cross-bracing may limit horizontal flexibility, and diaphragms may limit vertical circulation. Faults or soil instability may preclude siting that would be otherwise desirable. Building configuration plays an important role in the performance of the structure when subjected to seismic ground motion. To obtain optimal seismic resistance and performance, consider a symmetrical configuration of the structure system with properly placed lateral resisting structured elements. Further, the non-structural elements must be seismic resistant in order to maintain a post-earthquake operational capability.

6.4.2 Structures shall not normally be sited over active geological faults, in areas of instability subject to landslides, where soil liquefication is likely to occur, or in areas subject to tsunami damage (weather/wind/storm damage).

6.4.3 Consider the seismic design requirements with functional requirements in developing facility master plans. Functional relationships essential to life saving medical missions must not be comprised for nominal structural cost savings.

6.5 Provisions for Fire Protection System. The criteria for seismic bracing and lateral restraint of non-structural components for essential buildings given in reference 6b shall be followed in addition to those items listed in these paragraphs.

6.5.1 Brace sprinkler system piping in accordance with details provided in NFPA 13 (reference 6d).

6.5.2 Provide mounting brackets for portable fire extinguishers designed to preclude inadvertent release of the extinguisher due to vertical or horizontal earthquake motions. Provide recessed or semi-recessed cabinets for portable fire extinguishers.

6.5.3 Brace wet and dry standpipes.

6.5.4 Protect fire pumps and domestic water pumps to avoid damage by falling debris.

6.6 Provisions for Exit. Provide the following for essential facilities.

6.6.1 Design stairways to resist required lateral loads and ensure tolerance to maximum predicted structural deformations.

6.6.2 Design Exit door frames so that they will not deform and jam the doors.

6.6.3 Plan exit ways to avoid blockage with debris from ceilings, brittle wall finishes, and glass following a seismic disturbance.

6.7 Provisions for Hazardous Materials. Provide the following features for essential facilities.

6.7.1 Provide special storage equipment or accessories convenient for normal daily use and function after earthquakes. Examples of such equipment are lower profile shelves with face bars which restrain material on shelves and secure shelves to the wall or floor; specially designed racks for restraining reserve oxygen and nitrous oxide tanks; and special bins for storing anesthesia gas containers.

6.7.2 Brace gas piping and provide shut-off valves. Secure lead storage safes and bricks used for radioactive materials storage. Anchor bulk liquid oxygen storage tanks. Brace fuel lines. Provide malleable fittings and valves with swing joints where necessary.

6.8 Provisions for Alternate Source Power System. Provide the following features for essential facilities.

6.8.1 The essential electrical system shall follow the requirements outlined in Section 10.

6.8.2 When vibration isolation is necessary, provide restraining clips at vibration isolators to prevent the failure of the isolation mountings under earthquake vibration conditions.

6.8.3 Where practicable, use generators with integral radiator cooling systems. Where auxiliary cooling systems are necessary, install cooling towers or remote radiators at grade level. Brace cooling towers or radiators and provide special bracing for piping.

6.8.4 Underground Fuel Storage Tanks. The use of underground storage tanks should be kept to a minimum. Install expansion flex loops in fuel lines which are on the soil side of a foundation. Anchor all fuel day tanks, using malleable fittings and valves, with flexible connections to the generator.

6.8.5 Anchor and brace battery racks.

6.8.6 Anchor or otherwise restrain switchgear, substations, automatic transfer switches, bus ducts, distribution panels, and motor control centers.

6.8.7 Design all crossings of seismic or expansion joints by power lines appropriately. Provide for the flexibility of cable and conduit at potential points of differential movement. Provide separate grounds for conduit runs crossing seismic joints.

6.8.8 Fuel Storage. Provide a 4-day fuel supply as described in Section 10.

6.9 Provisions for Communication Systems. For essential facilities, plan the internal and external communication systems for the facility to ensure that necessary post-earthquake emergency communications will be available.

6.10 Provisions for Transport Systems. For essential facilities, design elevators and shafts to meet the prescribed lateral force requirements. It shall be necessary to install additional rail support brackets, counterweight retaining brackets, rail safety shoes, and emergency stop gear; and to brace spreader beams and elevator control cabinets.

6.11 Provisions for Mechanical Systems. Provide the following features for essential facilities.

6.11.1 Provide special detailing for bracing and flexible connection of essential ventilation systems and mechanical piping that serves operating rooms, emergency, laboratory, and radiology.

6.11.2 Design the air conditioning system to enable cooling of selected operating rooms and intensive care units by using the main chilled water system on a selected-period basis without cooling other portions of the facility.

6.11.3 Provide limiting restraints for all vibration-isolated air handling equipment.

6.11.4 Provide for normal water service with two independent connections to the water system. In addition, provide a water storage facility as a source of supply. Size the water storage facility to adequately meet fire and water demands during a 3-day minimum, post-earthquake emergency period. Design on-site water lines to minimize disruption from earthquakes and to facilitate post-earthquake repair. Design the water distribution system to conserve the water supply and permit control of its use.

6.11.5 Give special attention to the routing and bracing of pipe, vent, and sewer lines serving essential fixtures. Provide damage control valves and flexible connections where piping crosses seismic joints.

Specify malleable valves and fittings rather than cast iron. Piping shall not be damaged by movement of the structural system or other equipment.

6.11.6 Restrain all free-standing equipment, such as water tanks, chillers, boilers, pumps, and controls.

6.11.7 Provide an emergency 3-day minimum, sanitary sewage holding facility for temporary retention of all sanitary sewage discharge from the hospital during the post-earthquake emergency period.

6.11.8 Make provision to assure that the steam supply and the steam lines to the medical facility remain functional.

6.11.9 Provide standby reserve oxygen cylinders for post-earthquake emergency use with capacity for 3 days, minimum.

6.11.10 Equip the site gas supply line with a safety shut-off valve.

6.11.11 Provide 7 days fuel storage for the facility heat source, minimum.

6.12 Provisions for Medical Systems. Provide the following features for essential facilities.

6.12.1 Fixed Equipment.

6.12.1.1 Anchor the autoclaves.

6.12.1.2 Provide bracing as required for ceiling track design for X-ray units. Anchor all X-ray control consoles and automatic film developers.

6.12.2 Free Standing Equipment. Secure to a partition, equipment or shelving not required to be moved from location to location. Equipment with doors should have a positive latching devices.

6.12.2.1 Secure the blood bank, drug storage, critical refrigerators, freestanding incubators, and centrifuges.

6.12.2.2 Secure sequential multiple blood analyzers, and other fragile laboratory equipment shall be secured. Anchor related shelving with lips and face bars provided as necessary.

6.12.3 Storage for Supplies. Supply cabinets shall have either plastic or tempered glass in sliding doors, and the doors should slide closed automatically. Open shelving shall have a shelf rim which precludes supplies being shaken from their storage position.

6.12.4 Medical Gas Bottles. Provide for metal boxes attached to the floor and equipped with double chains for medical gas bottles. Equip wheeled carts carrying oxygen or other medical gases with wheel locks and chains for fastening to walls.

6.13 Provisions for Architectural Systems. Provide the following features for essential facilities.

6.13.1 Lighting Fixtures. Provide independent hangers at diagonal corners of lighting fixtures installed in suspended ceilings. Pendant fixtures shall be of earthquake-resistant design.

6.13.2 Ceilings. Provide lateral bracing and runners tied with wires rather than hold-down clips for lay-in type acoustic ceilings. Do not attach the ceiling to the surrounding walls.

6.13.3 Computer Floor. Brace computer floors to resist seismic motion.

6.13.4 Partitions. Provide appropriate backing plates, blocking, studs, and bracing for partitions which support cabinetry, storage racks, shelves, bins, and lockers. In a relatively flexible building, partition damage due to interaction with the frame shall be limited by anchoring each partition to a single structural member and allowing movement at the other edges.

6.13.5 Overhangs. Do not use unbraced overhangs, parapets, and balconies.

REFERENCES

6a. Joint Services Guidelines Manual, TM 5-809-10-1, NAVFAC P-355.1, AFM 88-3, Chapter 13, Section A, "Seismic Design Guidelines for Essential Buildings," 27 February 1986.

6b. Joint Services Manual, TM 5-809-10, NAVFAC P-355, AFM 88-3 Chapter 13, "Seismic Design for Buildings," October 1992.

6c. Joint Services Guidelines Manual, TM 5-809-10-2, NAVFAC P-355.2, AFM 88-3 Chapter 13, Section B, "Seismic Design for Upgrading Existing Buildings", 1987.

6d. NFPA 13, "Sprinkler Systems, Installing Of".

BLANK PAGE

SECTION 7: ENERGY AND WATER CONSCIOUS DESIGN

7.1 General. This section provides guidance on energy conscious design. The goal of energy conscious design guidance is to minimize energy and water consumption through the integration of energy conservation measures and renewable energy sources into both the architectural and engineered systems design. The ultimate goal is to minimize consumption while satisfying the mission requirements and the funding limitations. These guidelines are in accordance with the following directives: Title 10 CFR, Subpart A, Part 435, "Energy Conservation Voluntary Performance Standards for New Commercial and Multi-Family High Rise Residential Buildings, Mandatory for Federal Buildings (reference 7a), the Federal Energy Management Improvement Act of 1988 (reference 7b), The Energy Policy Act of 1992 (reference 7c), and Executive Order 12902 (reference 7d).

7.2 Policy.

7.2.1 Medical Function. The integration of energy and water conservation measures and renewable energy sources shall not reduce the service to or interfere with the functional requirements of the facility. Conservation shall be achieved in conjunction with, not at the expense of, the medical, architectural, and engineering requirements of the facility.

7.2.2 Proven Technologies. The technologies associated with the energy conservation measures and renewable energy sources shall be proven in that they are readily available and can be procured competitively.

7.2.3 Utility Incentive Programs. Military Departments are authorized to participate in utility incentive programs (references 7c, 7d, and 7e). These programs are typically associated with load management techniques which includes maximizing efficiency and controlling the demand. The designer shall ascertain the applicable programs offered by the given utilities and incorporate those which are cost effective.

7.2.4 Energy and Water Conservation Program. The Office of the Deputy Under Secretary of Defense for Environmental Security (DUSD(ES)) is responsible for administering the Federal Energy Management Program (FEMP) and the Energy Conservation Investment Program (ECIP). These programs are designed to improve the energy efficiency of new or existing DOD facilities within MILCON project guidelines. The DUSD(ES) will give the highest funding priority to projects and programs that provide the greatest cost-effective energy or water use reduction and savings-to-investment ratios. Military Departments should develop valid ECIP or FEMP projects in accordance with reference 7j with an accompanying DD Form 1391 justifying the proposed project and submit to OASD(HA) DMFO for inclusion into their submission to DUSD(ES).

7.2.5 Economic Study. The design shall consider all potential energy conserving features, equipment, systems or strategies as may be applicable to the particular project. Those which are cost effective shall be incorporated. Systems or features involving significant investment (first) cost, and all major equipment selections, shall be analyzed according to the guidance stated in this section.

7.2.6 Metering. Utilities providing energy, such as, electricity, gas, steam, heating hot water, and chilled water, shall be metered. The meter shall have the capability of interfacing with a Utility Monitoring and Control System.

7.3 Design Guidelines.

7.3.1 Passive Solar Energy. The use of passive solar energy conservation techniques shall be considered. Earth sheltering and berming, building orientation and shading shall be used to reduce heating and cooling loads if practical.

7.3.2 Design Conditions. The facility design conditions are referenced in Appendix A. These room requirements shall be used as input data for all analyses. For those requirements not specifically addressed in this Handbook, consult ASHRAE publications or equivalent sources.

7.3.3 Equipment Operating Efficiencies. The minimum operating efficiencies for energy consuming equipment shall be in accordance with the 10 CFR 435 (reference 7a) and the design criteria and guide specifications for the given Military Department. The design shall use the highest equipment efficiencies determined to be competitively available and cost effective.

7.3.4 Thermal Transmission Values. The thermal transmission values utilized in the design shall be in accordance with the criteria in Table 7-1. These values are to be used as guidance when establishing the building's construction during early concept design. The insulation value of the construction can be increased or decreased, whichever is most cost effective for the given climatic conditions and building operation. Cost effectiveness shall be determined during the concept design phase based on an life cycle cost analysis (LCCA).

7.3.5 Energy Source Selection. The energy source for the heating and cooling systems, service water heating, and process loads for new hospitals and other facilities as designated by the design agent shall be selected in accordance with the requirements set forth in the Defense Energy Program Policy Memorandum titled "Defense Facilities Energy Selection" (DEPPM 88-1) (reference 7f). The energy source shall be selected prior to initiating the building systems and energy conservation measures analyses. It shall be the least life cycle costly alternative which can be reliably supplied. The use of nonconventional or alternative energy sources is strongly encouraged if proven reliable and cost effective. Energy or fuel supply contracts with third party financing are also strongly encouraged and shall be considered prior to authorizing a new heating or power plant. Refer to DEPPM 88-2 (reference 7g) titled "Private-Sector Financed Defense Energy Contracts" for privately financed Defense energy contract guidelines.

7.3.5.1 Total Energy System. Total energy systems shall be considered for major facilities as directed by the design agent.

7.3.5.2 Renewable Energy Systems. Systems such as solar, wind, and geothermal energy shall be considered for each project.

7.3.6 Utility Costs. The utility cost data shall be ascertained from the Installation's contracting office or other approved source as directed by the Design Agent.

7.3.7 Utility Monitoring and Control System (UMCS). A UMCS shall be considered for hospitals and other large facilities as directed by the design agent. All facilities shall be designed to be prepared for connection to a campus or basewide UMCS unless directed otherwise by the Design Agent.

7.4 Design Goals. The facility shall be designed so that the "Design Energy Usage" does not exceed the "Design Energy Target".

7.4.1 Design Energy Target. The design energy target (DET) is the maximum allowable energy consumption in Watts per gross square meter (BTU's per gross square foot) of the facility per year excluding energy associated with medical functional operation (process loads). The DET's are established for given climatic conditions and type of facility with a specified operating schedule (Table 7-2). The climatic conditions are given by regions and are also shown in Table 7-2.

7.4.2 Design Energy Usage. The design energy usage (DEU) is an estimate of the energy consumed by the facility. This estimate is calculated early in the concept design phase and adjusted as necessary in accordance with the design development. The facility's DEU shall not exceed the DET. The DEU shall include all room conditioning loads - heating, cooling, humidification, lighting, and ventilation. No process loads such as energy consumed by laboratory, central material, food service, or ancillary support operations shall be included in the DEU. The energy consumed by the primary equipment in the energy plant shall be included in the DEU. The primary equipment distribution system losses are included in the DEU if the plant is dedicated to the given facility. The energy supplied by a central plant serving more than the given facility shall not be included in the DEU. Its conversion losses and distribution system losses shall not be included in the DEU. Credit shall be taken for any energy content not consumed or wasted, such as condensate and heating hot water return. Use the conversion factors shown in Table 7-3 when calculating the DEU. The area used to determine the DEU shall be the gross area measured from the outside of the exterior walls. When more than one category is incorporated into a given facility, the interior portion of the area boundary shall be measured from the center line of the partitions.

7.4.3 Total Design Energy Usage. The total design energy usage (TDEU) is an estimate of the energy consumed to condition and operate the facility. It shall be calculated in conjunction with the DEU to include all process loads based on the planned operating schedule. The TDEU provides the User with an estimate of the total energy to be consumed from which a cost for the operating budget can be determined. This estimate can also be used in comparison to the actual energy consumed during operation.

7.5 Design Analysis. Selection of energy consuming systems and design features shall be based on a LCCA. The analysis shall be in accordance with the procedures specified in the National Institute of Standards and Testing (NIST) life cycle cost handbook, reference 7h, supplemented with military department criteria. The systems, or components, with the least life cycle cost shall be selected.

7.5.1 Computer Analysis. The computer analysis consists of two parts - the energy consumption analysis and the life cycle cost analysis. All new facilities, additions, and major alterations larger than 280 gross square meters (3000 gross square feet) shall be computer analyzed. Alteration or upgrade project analysis requirements shall be established for each project as directed by the Design Agent. Projects less than 280 gross square meters (3000 gross square feet) may be analyzed using one of the accepted computer programs, including those which are simulated hourly programs, or one of the simplified methods described in Chapter 28, "Energy Estimating Methods" of the ASHRAE Handbook of Fundamentals (reference 7i).

7.5.2 Energy Analysis. The energy analysis shall determine the facility's annual energy consumption based on the proposed design. A building load analysis program that uses ASHRAE approved methods shall preferably be used. Refer to military department criteria for additional requirements.

7.5.3 Life Cycle Cost Analysis. The life cycle cost analysis (LCCA) shall determine whether or not a design measure or system is cost effective, or which of several system or component types serving the same purpose is most cost effective. The economic analysis algorithm is established in the NIST handbook (reference 7h). Key parameters such as the discount rate and fuel escalation rates are established by the Department of Energy (DOE) and revised periodically. Use a 10 percent discount factor for present worth discounting, the actual current or expected unit energy cost instead of the Defense Fuel Supply Center (DFSC) contract rate. Unlike the energy analysis, LCCA's shall be based on actual operating hours. Both government and commercial acceptable programs are available. Most energy analysis programs also have an LCCA program included. However, not all of the LCCA programs offered with acceptable energy analysis programs are in accordance with the NIST handbook and the DOE rates and factors. Consult with the Design Agent to identify acceptable programs.

TABLE 7-1

MAXIMUM THERMAL TRANSMISSION VALUES FOR
DoD MEDICAL AND DENTAL TREATMENT FACILITIES

WATT/m^2-^{o}C (BTU/hr-ft^2-^{o}F)

HEATING (1) DEGREE DAYS ^{o}C (^{o}F)	GROSS WALL(2) U_O	OPAQUE WALLS(3) U_W	CEILING/ ROOF(4) U_R	FLOOR SPACE(5) U_{F5}	FLOOR GRADE(6) U_{FG}
Less than 560 (less than 1000)	2.15 (0.38)	0.853 (0.15)	0.284 (0.05)	0.568 (0.10)	1.647 (0.29)
561-1110 (1000-2000)	2.15 (0.38)	0.853 (0.15)	0.284 (0.05)	0.454 (0.08)	1.363 (0.24)
1111-1670 (2001-3000)	2.048 (0.36)	0.568 (0.10)	0.227 (0.04)	0.397 (0.07)	1.192 (0.21)
1671-2220 (3001-4000)	2.048 (0.36)	0.568 (0.10)	0.170 (0.03)	0.397 (0.07)	1.022 (0.18)
2221-3330 (4001-6000)	1.760 (0.31)	0.454 (0.08)	0.170 (0.03)	0.284 (0.05)	0.794 (0.14)
3331-4440 (6001-8000)	1.590 (0.28)	0.397 (0.07)	0.170 (0.03)	0.284 (0.05)	0.683 (0.12)
over 4441 (Over 8000)	1.590 (0.28)	0.397 (0.07)	0.170 (0.03)	0.284 (0.05)	0.568 (0.10)

TABLE 7-1 NOTES

(1) Degree-Day value from the joint service Manual TM 5-785, NAVFAC P-89 and AFM 88-29 Engineering Weather Data shall be used.

TABLE 7-1 NOTES CONTINUED:

(2) Gross wall (U_o) values include all doors and windows, window frames, metal ties through walls, structural steel members that protrude through all insulation to the exterior, or adjacent to the exterior, and continuous concrete or masonry walls or floors that extend from inside heated spaces through the building envelope to the exterior, e.g., fire walls that extend above the roof and concrete floor slabs that extend beyond the exterior walls to form a balcony or terrace. Maximum U_o value will put a limitation on the allowable percentage of glass to gross wall area in a building. It should be noted that in hospital, medical, and dental facilities which are positively pressurized, the 10 percent limitation on glass to gross wall area for walls facing a prevailing winter wind may not be appropriate. Insulating glass on the building will allow a higher percentage of glass in comparison to single pane glass. The U-value of each wall component shall be factored by the percent of the total area it covers.

(3) Wall (U_w) value is the thermal transmittance of all elements of the opaque wall area. U_w values shall be used for upgrade of existing facilities where the alteration of the wall cavity and resizing of window glazing to meet gross wall values (U_o) are not cost effective. There may be situations where upgrading all the perimeter walls in low, medium, and high internal loaded spaces to the specified transmission value may not be life-cycle-cost effective. The designer will recommend appropriate alternatives when such situations occur, providing supporting life-cycle-cost data based on appropriate hour-by-hour computer simulations. This requirement to assess the above-mentioned situation may necessitate a variation from the values set forth in this table.

(4) Ceiling/roof (U_R) values are for ceiling/roof areas where adequate space exists for insulation to be applied above ceiling and/or below roof structure. Built-up roof assemblies and ceiling assemblies in which the finish interior surface is essentially the underside of the roof deck will have a maximum U_r value of 0.284 (0.05) for any Heating Degree Day area.

(5) Floor, space (U_{FS}) values are for floors of heated space over unheated areas such as garages, crawl space, and basements without a positive heat supply to maintain a minimum of 10 ^oC (50 ^oF).

(6) Floor, grade (U_{FG}) values are for slab-on-grade insulation around the perimeter of the foundation.

TABLE 7-2

DESIGN ENERGY TARGETS (DET) FOR DoD MEDICAL AND DENTAL (1) TREATMENT FACILITIES - MJ/m²/yr (1000 BTU/ft²/yr))

BUILDING CATEGORY CODE	REGION 1	REGION 2	REGION 3	REGION 4	REGION 5	REGION 6	REGION 7
(2) CDD (3):	< 1110	< 1110	< 1110	< 1110	< 1110	> 1110	> 1110
:	<(2000)	<(2000)	<(2000)	<(2000)	<(2000)	>(2000)	>(2000)
:							
HDD (3):	> 3885	3055-	2220-	1110-	0-	0-	2000-
:		3885	3055	2220	1110	1110	1110
:	>(7000)	(5500-	(4000-	(2000-	(0-	(0-	(2000-
:		7000)	5500)	4000)	2000)	2000)	4000)
510 Hospital Buildings (4)	1530 (135)	1530 (135)	1190 (105)	1140 (100)	1140 (100)	11909 (105)	1250 (110)
530 Laboratories (5)	510 (45)	510 (45)	400 (35)	400 (35)	400 (35)	400 (35)	400 (35)
540 Dental Clinics (5)	740 (65)	740 (65)	620 (55)	570 (50)	450 (40)	510 (45)	680 (60)
550 Dispensaries (5)	740 (65)	740 (65)	570 (50)	510 (45)	400 (35)	450 (40)	620 (55)

TABLE 7-2 NOTES:

(1) Energy consumed within 1.5 m (5 ft) line, based on Dept. of Energy building categories and weather zones. The DET for a building within which more than one category is found shall be the sum of the area-factored DET's for the given categories. A minimum 10% of the total area shall be dedicated to the given category to be factored into the DET.

(2) Degree-Day value from the joint service Manual TM 5-785, NAVFAC P-89 and AFM 88-29 Engineering Weather Data shall be used.

(3) Cooling Degree Days - CDD; Heating Degree Days - HDD

(4) 24 hours/day, 7 days/week.

(5) 10 hours/day, 5 days/week.

TABLE 7-3

ENERGY CONVERSION FACTORS (1)

FUEL TYPE	CONVERSION FACTORS
ANTHRACITE COAL	33 MJ/kg (28.4 MILLION BTU/SHORT TON)
BITUMINOUS COAL	28.6 MJ/kg (24.6 MILLION BTU/SHORT TON)
#2 DISTILLATE FUEL OIL	38.7 MJ/L (138,700 BTU/GALLON)
RESIDUAL FUEL OIL	41.7 MJ/L (149,700 BTU/GALLON)
KEROSENE	37.6 MJ/L (135,000 BTU/GALLON)
LP GAS	26.6 MJ/L (95,500 BTU/GALLLON)
NATURAL GAS	38.4 kJ/L (1,031 BTU/ft^3)
STEAM	2.3 MJ/kg (1000 BTU/LB)
ELECTRICITY (2)	3.6 MJ/kWh (3,413 BTU/kWh)
HEATING HOT WATER, CHILLED WATER	HEAT CONTENT OF FLUID ENTERING THE FACILITY

TABLE 7-3 NOTES:

(1) If a given energy source consistently differs from these conversion factors by greater than 10%, then use the actual unit BTU content value instead of the conversion factor shown.

(2) Electricity is not typically used for space heating. In the exceptional case where it is cost effective and greater than 10% of the annual space heating is derived directly from electric resistive heating, the energy consumed shall be multiplied by 2.2 to account for conversion losses.

REFERENCES

7a. 10 CFR, Part 435, "Energy Conservation Voluntary Performance Standards for New Buildings; Mandatory for Federal Buildings", Subpart A - Voluntary Performance Standards for New Commercial and Multi-Family High Rise Buildings; Mandatory for Federal Buildings", Revised January 1, 1992.

7b. "Federal Energy Management Improvement Act", Public Law 100-615, November 5, 1988.

7c. "Energy Policy Act", Public Law 102-486, October 24, 1992.

7d. Executive Order 12902, "Energy Efficiency and Water Conservation at Federal Facilities", March 8, 1994.

7e. Defense Energy Program Policy Memorandum, "Participation in Public Utility Sponsored Energy Conservation and Demand Side Management (EC/DSM) Programs", DEPPM 94-1.

7f. Defense Energy Program Policy Memorandum, "Defense Facilities Energy Selection", DEPPM 88-1, October 14, 1988.

7g. Defense Energy Program Policy Memorandum, "Private-Sector Financed Defense Energy Contracts", DEPPM 88-2, September 30, 1988.

7h. National Institute of Standards and Technology (NIST) HDBK 135 (Rev), "Life Cycle Cost Manuals for Federal Energy Management Programs".

7i. American Society of Heating, Refrigerating and Air Conditioning Engineers (ASHRAE), "Handbook of Fundamentals", 1993.

7j. Memorandum OASD(L/MRM), Subject: Energy Conservation Investment Program Guidance, March 17, 1993

SECTION 8: HEATING, VENTILATION AND AIR CONDITIONING (HVAC)

8.1 General. This section provides HVAC design guidance for medical program facilities. Support of medical function and maintenance of occupant health and safety are the priority considerations in HVAC design. In addition, appropriate consideration shall be given to simplicity of design and system maintainability, future modification or expansion, and the operating and capital costs associated with the HVAC systems.

8.1.1 Criteria Documents: This guidance may be supplemented by the individual military departmental publications, including Architect-Engineer Instructions (AEIs), Technical Manuals (TMs), Engineering Technical Letters (ETLs) and other criteria. Minimum HVAC design criteria shall be in accordance with the latest editions of the American Society of Heating, Refrigerating, and Air Conditioning Engineers (ASHRAE) publications (reference 8a), the American Council of Government Hygienists (ACGIH) Publication "Manual of Recommended Practices for Industrial Ventilation" (reference 8b), and the National Fire Protection Association (NFPA) Standards (references 8c, 8d, 8e, 8f, 8g, and 8h). Other industry and government publications shall be utilized for HVAC design as referenced. In the event of criteria conflict, the provisions of MIL-HDBK-1191 shall rule.

8.1.2 Design Conditions.

8.1.2.1 Weather Data. Weather data shall be obtained from the most recent edition of the Joint Services Manual TM 5-785, NAVFAC P-89, AFM 88-29, "Engineering Weather Data" (reference 8i).

8.1.2.2 Interior Design Conditions. Interior design conditions shall be in accordance with Appendix A.

8.1.2.3 Space Ventilation. Minimum total and outside air change rates and relative pressure requirements shall be as indicated at Appendix A. Higher air change rates may be required to meet air conditioning requirements, as supported by engineering calculations. Refer to paragraphs 8.12 for additional information and requirements.

8.1.2.4 Air Conditioning Design Dry and Wet Bulb. The HVAC cooling design for all facilities shall be based on the 2.5 percent dry bulb (DB) temperature and the corresponding 2.5 percent mean coincident wet bulb (MCWB) temperature, and heating design upon the 97.5% DB, as provided in reference 8i, with the exception of Critical Care and Sensitive spaces where special environmental requirements demand more precise humidity or temperature control, or both, at all times. Critical Care and Sensitive Spaces shall be designed as described below.

8.1.2.5 Critical Care Spaces. Critical Care Spaces are identified in Section 10. HVAC cooling design for critical hospital areas shall be based on the 1 percent dry bulb temperature with corresponding 1 percent MCWB temperature. The heating design shall be based upon the 99% winter dry bulb temperature.

8.1.2.6 Sensitive Spaces. Sensitive areas include Automated Data Processing (Computer) rooms, Radiology and MRI computer rooms, and Telephone Switch Room. Other rooms housing sensitive electronic or other equipment or processes may be designated as Sensitive Areas on an individual project basis. Design ambient temperatures shall generally be

the 1% DB/1% MCWB (summer), and 99% DB (winter). However, each application

should consider using 2.5% DB/2.5% MCWB (summer), and 97.5% DB (winter) design conditions for less critical equipment/process air conditioning requirements.

8.1.2.7 Smoke Control Operation. When a supply air system is required to operate on 100% outside air during smoke mode operation, the system shall be designed with sufficient heating capacity to maintain a minimum of 45 degrees at the air handling unit discharge under the 99% winter design conditions.

8.1.3 Refrigerants. Refrigeration equipment shall utilize refrigerant having an Ozone Depletion Potential (ODP) of not greater than 0.05. Refrigeration room design shall include the safety features, such as sensing devices, purge ventilation system, etc., as required for the particular refrigerant in accordance with ASHRAE Standards 15 and 34 (references 8j and 8k).

8.1.4 Life-Cycle-Cost/Energy Analysis. HVAC equipment selection shall include life-cycle cost analysis of the available equipment or system alternatives, in accordance with guidance given in Section 7.

8.2 Eligibility for Air Conditioning.

8.2.1 Total Air Conditioning. Total air conditioning is permitted in all new facilities where the cooling requirements exceed 100 cooling degree days (CDD), as determined from reference 8a, except as noted in paragraph 8.2.3. In areas with less than 100 CDD per year, the following spaces may be cooled:

a) Critical Care Spaces as defined in Section 10.

b) Sensitive Spaces as defined above.

c) Dental Treatment Spaces.

d) Spaces or areas for which load analysis demonstrates that design conditions, as provided at Appendix A, cannot be met for significant periods of time during normal duty hours, including clinical, patient bedroom, administrative, dining, and other normally occupied areas.

8.2.2 Food Service Area. Air conditioning of the kitchen areas shall be designed to avoid the waste of energy. The design shall consider utilizing dining room transfer air or tempered make-up air for vented equipment exhaust, spot cooling, exhaust system heat recovery, and other energy saving strategies to minimize energy costs while providing a comfortable environment for kitchen staff.

8.2.3 Not Authorized Air Conditioning. The following areas shall not be air conditioned regardless of weather conditions. Heating and/or ventilation may be provided as required.

a) Motor Vehicle Storage Areas

b) Boiler Plants

c) Maintenance Rooms (Mechanical/Electrical)

d) Toilets/Showers and Locker Rooms. Where public or staff Toilet/Shower or Locker Rooms are located on the facility perimeter, air

conditioning may be permitted in order to meet interior design conditions referenced at Appendix A. Locker rooms which do not include a shower room or toilet may be recirculated at the discretion of the design agent.

8.2.4 Medical Warehouses. HVAC design shall be based upon the environmental requirements of the stored materials. Materials with critical temperature or humidity requirements should be stored in separately partitioned areas from materials having less critical requirements, to avoid the needless expenditure of air conditioning energy. Spaces within medical warehouses which will be normally occupied, including Administrative or Break rooms, shall be air conditioned as required to provide the design conditions listed in Appendix A. Consideration shall also be given to air conditioning for any warehouse spaces housing computer or other environmentally sensitive equipment.

8.3 Mechanical Equipment Space.

8.3.1 Mechanical rooms for major air handling equipment, heat exchangers, prime movers, medical gas supplies, vacuum/air compressors, and other major mechanical equipment shall be located within the facilities with access to the outside of the building. If demonstrably cost effective and acceptable from an operating and maintenance (O&M) standpoint, penthouse equipment rooms may be considered. Mechanical room location and layout shall consider:

a) Sufficiency of space to enable access for operation, maintenance, and replacement of equipment.

b) Minimization of distribution runs.

c) Potential future expansion of mechanical system capacity.

d) Potential Future expansion of the facility.

8.3.2 Chilled water and steam/hot water generators may be located in a separate energy plant. Utility lines connecting the energy plant to the facility shall be installed in a tunnel or other enclosure providing maintenance access and protection from the elements.

8.4 HVAC System Design For Functional Areas. For HVAC design, a facility can be considered to contain six general areas including Critical, Sensitive, Outpatient Clinic, Administrative, Support areas, and Patient Bedroom areas. The primary considerations of the HVAC design are to provide the environmental conditions required to meet the functional requirements. Multizone, dual-duct, terminal reheat, and combinations of such air distribution systems may be considered for application in appropriate areas. Utilization of variable air volume (VAV) systems may be approved by the individual military department. If utilized, VAV systems will be of the minimum air quantity type. All-water, unitary, and fan-powered VAV systems will generally not be acceptable in medical facilities, due to their limitations in meeting ventilation requirements, increased contamination source potential (cooling coil drain pans), or increased maintenance requirements.

8.4.1 Critical Care Spaces. These spaces will normally be served by single duct terminal reheat or double duct systems. Simultaneous temperature and humidity control requirements for these spaces preclude the use of other types of systems.

8.4.1.1 Operating & Delivery Room (OR and DR) Air Systems. The room air supply system for Operating Rooms, Delivery Rooms, Cardiac Catheterization (hospital) Rooms, and Cystoscopy (hospital) Rooms shall be a ceiling supply type, located over the operating table or treatment area, using non-aspirating "low velocity" (0.2 - 0.41 m/s)(40-90 fpm) diffusers that isolate the air over the operating or treatment area. Room exhaust/return provisions shall consist of a minimum of two exhaust or return registers, located at diagonally opposing corners of the room, mounted with bottoms of registers between 150 mm (6 in) and 230 mm (9 in) above finished floor.

8.4.1.2 Continuity of Service. The design for the HVAC systems serving Critical Care spaces shall include the following:

a) The Air Handling Units (AHUs) serving Operating or Delivery Room suites shall generally be independent units serving only the respective Surgical or Obstetrical Department or portions thereof, to enhance the reliability of these systems and minimize demand on the emergency power system. If the OR(s) or DR(s) utilize 100% room exhaust, and if otherwise justified from a cost or functional standpoint, the air handling unit serving these spaces may also provide service to other Patient Care or support areas outside the respective Surgical or Obstetrical Department. Air handling units serving Surgical and Obstetric Departments shall be separate systems. A maximum of four ORs or four DRs shall be served by any single AHU. Where a facility has only four ORs, or less, these should be served by at least two separate air handling systems, and similarly for DRs.

b) HVAC equipment, including controls, which serve Critical Spaces shall be connected to the essential electrical power system.

c) Designs shall include features to minimize HVAC service interruptions to Critical Care spaces, without the provision of redundant air handling units or distribution systems. Provisions shall be such that service interruption to any Critical Care space, as a result of failure of an air handling unit component or its supporting electrical or controls systems, shall be minimized. Such features may include the provision of multiple, isolatable, heating and cooling coils, spare stockage of replacement motors, drive belts, and bearings in the immediate vicinity of the equipment room, dual fans and motor drives each sized for one half the required flow rate, "manifolded" ductwork, or other measures providing for continuity or expeditious restoration of service.

8.4.2 Sensitive Areas. These are spaces or areas in which equipment or processes require special environmental control, normally including continuous (24 hours per day, year-round) air conditioning and individual room temperature and/or humidity control. Economic or operational considerations normally dictate provision of independent air conditioning systems for Sensitive Areas, to enable continuation of air conditioning when main building systems are shut down for repairs, or are operating in night setback or economizer mode. Minimum outside air ventilation shall be provided in normally occupied areas. For those sensitive spaces critical to continued hospital function and which require continuous cooling to remain in operation, appropriate backup or redundant features shall be provided to assure continuity of air conditioning in the event of primary air conditioning equipment failure.

8.4.3 Administrative Areas. Administrative areas may be served by single duct reheat, multi-zone, or dual-duct systems, with perimeter

radiation when required or advantageous. Variable Air Volume (VAV) systems may be authorized by the individual Military Departments.

8.4.4 Outpatient Clinics. Outpatient clinics may be served by single duct reheat, dual-duct, or multi-zone systems. VAV systems may be authorized by the individual Military Departments. Multi-zone systems may only be employed if the following conditions are considered: 1) ease of mechanical room duct egress, 2) no large disparity in zone size or load profile, 3) little likelihood of space repartitioning or rearrangement, and 4) proximity of space served to the mechanical room.

8.4.5 Support Service Areas. Support service areas may be served by single duct reheat, dual-duct, or multi-zone systems. VAV systems may be approved for this application by the individual Military Department. Certain single zone areas, such as portions of Food Service, may be provided with central air single zone systems, giving full consideration to heat recovery.

8.4.6 Patient Bedrooms. Normal Patient bedrooms may be served by dual duct, multi-zone, or single duct reheat systems. Variable air volume (VAV) systems may be approved by the individual Military Departments. All systems utilized shall maintain minimum ventilation quantities under all conditions of operation. Perimeter radiation systems (radiant panels) may be considered in conjunction with these air systems. Fin-tube heating systems shall not be used in patient bedrooms.

8.4.6.1 Patient Isolation Bedrooms. Isolation bedrooms shall be served by duct systems which maintain a constant differential between supply and exhaust air flow rates as required to maintain the required relative pressurization of the space to the adjacent spaces and corridor. With the exception of Immune Suppressed Patient (ISP) Isolation Bedrooms, and of Tuberculosis Patient (TB) Isolation Bedrooms, HVAC controls shall be designed to permit the manual selection, at a switch mounted within or adjacent to the space, of either a positive or negative pressurization of the Isolation Bedroom. Pressurization control equipment serving ISP and TB Isolation Bedrooms shall be connected to the emergency electrical power system.

8.5 General Design Considerations.

8.5.1 Contaminant Removal. HVAC systems shall be designed to remove or reduce to acceptable levels volatile chemical and airborne microbiological contaminants within the facility. Systems shall be designed to remove excessive moisture in facility spaces and to control moisture and dust accumulation in air handling units, distribution elements, and chases, to avoid conditions permitting the growth of pathogenic, allergenic, or otherwise objectionable microorganisms.

8.5.2 Interdepartmental Air System Restriction. In general, individual facility departments should be served by dedicated air handling systems in order to increase system flexibility, energy conservation, and reduce demands upon the emergency power system.

8.5.3 Air Filtration. Individual space air filtration shall be provided as indicated at Appendix A. 25% or 30% efficiency "roughing" filters shall be provided upstream of all coils, velocity sensing devices, or other devices requiring protection from dust accumulation.

8.5.4 Balancing Ports and Features. Necessary controls, instrumentation, and balancing ports and devices shall be provided to establish and maintain the required space temperature, relative humidity, and air changes rate, and to facilitate balancing procedures for all systems.

8.5.5 Protection of Patients From Construction Contaminants. For additions or alterations to existing hospitals, measures shall be provided to minimize contamination of existing hospital areas, during the construction period, and the associated HVAC systems serving them. Measures to reduce the potential of contamination and nosocomial infections include but are not limited to negative isolation of construction areas, construction of effective dust barriers (including double barrier air locks at entrances and exits) separating construction from occupied areas, protection of air distribution systems serving occupied areas, and disinfection of any reused ductwork.

8.5.6 Equipment Heat Generation. In many spaces within facilities, the primary component of air conditioning loads will be equipment heat generation. It is therefore necessary for accurate load determination that the HVAC designer coordinate on a project-by-project basis with the equipment designer, and with the individual Using Agency, to identify all individual equipment items and the corresponding load contributions.

8.6 HVAC System Controls

8.6.1 Energy Conservation. To the extent compatible with medical functional requirements and life-cycle cost effective, energy-conserving controls and features shall be utilized in the HVAC design. Such strategies include but are not limited to economizer cycle, alternate energy sources, night setback or set-up (for non-24 hour operations), exhaust air energy recovery, compressor heat recovery, and ventilation delay. Refer to Section 7 for more detailed treatment of energy conscious design requirements.

8.6.2 Temperature Control. Individual room temperature controls shall be provided for all Critical spaces, Sensitive spaces, Patient Bedrooms, and Laboratories, to closely maintain the room conditions provided at Appendix A. Zoned temperature control shall generally be utilized for other spaces within the facility.

8.6.3 Control Precision. Temperature controllers shall maintain space temperature within +/- 1.1 ºC (2 ºF) of design setpoint, as provided for the individual spaces at Appendix A. The summer and winter design setpoints normally differ. For some spaces, a temperature range is given as the summer, or winter, interior design condition in lieu of a specific temperature setpoint. The HVAC system for such spaces shall be designed with the capability, under design conditions, to maintain any selected temperature within that range.

8.6.4 Humidity Control. Humidity controls shall be provided as necessary to meet the requirements given for individual spaces at Appendix A. Humidity controls for Critical and Sensitive areas shall be provided on a room basis. Humidity controls for all other spaces may be provided on a zone or system basis as determined to be sufficient to maintain the required conditions. Note that for spaces for which precise relative humidity requirements are not stated, humidity controls may be required to maintain an envelope of 30% to 60% RH during normally occupied hours.

8.6.5 Building Management Systems (BMS) (also termed Energy Monitoring and Control Systems, EMCS; and Utility Monitoring Systems, UMS). Digital systems which permit the central monitoring of HVAC systems and environmental conditions shall be provided for hospitals and other selected inpatient facilities. No off-site (ie., basewide) control system shall be permitted to exercise control over any hospital HVAC system equipment providing service to Critical Care Spaces. Hospital BMS shall be designed to reduce operating and maintenance (O&M) and energy costs through improved monitoring, control, system interface, and reporting capability. Selection of monitoring and control points and operating strategies should be in accordance with individual military departmental guidance.

8.7 Source of Steam for Humidification and Sterilization.

8.7.1 Humidification Steam Source. Steam generated by heating system boilers, or any other steam containing harmful concentrations of amines or other treatment chemicals, shall not be used for space humidification. Separate steam generators for humidification shall be provided. The design shall include provisions to minimize the effects of system corrosion resulting from the heating of undeoxygenated water.

8.7.2 Sterilizer Steam Source. Steam generated by boilers located in an on-site (hospital-dedicated) boiler plant may be utilized for sterilization steam subject to approval by the individual military department. As hospital authorities cannot normally exercise a reasonable degree of supervision or control over treatment chemicals utilized in base-wide or district systems, steam from these sources may not be utilized for direct sterilization.

8.8 Air Handling and Distribution.

8.8.1 Duct Design. Duct systems shall be designed in accordance with references 8a, 8b, 8e, and 8l. Access panels shall be provided as necessary for access to fire dampers, smoke dampers, and control equipment, and to facilitate periodic cleaning or disinfection of ductwork.

8.8.2 System Shutdown Capability. To the extent practical and cost effective, non-critical area HVAC systems shall be designed to permit shutdown (night setback/setup, air recirculation) of individual areas or departments not in operation on a 24-hour basis.

8.8.3 Outdoor Air Intakes. Outdoor air intakes shall be located as far as practical, but not less than 9000 mm (30 ft), from exhaust outlets of ventilation systems, cooling towers, combustion equipment stacks, medical/surgical vacuum systems exhaust, plumbing vent stacks, emergency generator exhaust, or from areas which may collect vehicular exhaust and other noxious fumes. Locate the bottom of air intakes serving central systems as high as practical but not less than 2400 mm (8 ft) above ground level, or if installed above the roof, at least 900 mm (3 ft) above roof level.

8.8.4 Ductwork Material. Ductwork installed downstream of high efficiency final filters (90% or greater, see Appendix A) shall be of stainless steel, or aluminum, including all accessories such as dampers, fasteners, and turning vanes. This provision does not apply to high efficiency filters located at air handling units (intermediate filters). Exhaust ducts for glass washers, dishwashers, and cart washers shall have

soldered or welded joints and shall be pitched to drain. Ductwork for laboratory equipment is covered elsewhere in this section.

8.8.5 Duct and Air Fixture Design. Duct velocities shall be designed according to accepted industry guidelines with appropriate consideration given to noise generation and attenuation. In addition, air distribution fixtures (diffusers, grills, etc.,) shall be sized to provide air inlet/outlet velocities consistent with room NC level requirements. Spin-in or other 90 degree duct drop connections to diffusers shall be equipped with equalizing grids as necessary to assure uniform air distribution at the diffuser inlets.

8.8.6 Return Air Plenums. Corridors shall not be used as return air plenums in any portions of facilities. Exceptions allowing transfer air for toilets and janitor's closets, as provided in NFPA 90A and 101, (references 8d and 8h) may be allowed. Utilization of above-ceiling areas as return air plenums shall not be permitted in inpatient or critical-care areas of facilities. All supply air, with the exception of air transferred between spaces for the purpose of pressurization, shall be provided in sheet metal ductwork. Utilization of above-ceiling areas for return or exhaust air in portions of facilities not classified as healthcare occupancy shall be subject to individual military departmental criteria.

8.9 Maintenance Provisions.

8.9.1 General Personnel Access. Safe and practical means of personnel access must be provided to, and within, all areas of the facility where equipment is located, to adequately provide for operation, maintenance, and replacement (O&M) of the equipment. Access to equipment rooms from outside the facility should be provided where feasible. Within equipment rooms, a minimum of four feet of clearance is generally required at all service points to mechanical equipment to allow adequate personnel access and working space. The design of O&M personnel accessways should not provide less than 1700 mm (67 in) of overhead clearance (except on intermittent basis), or require personnel to climb over equipment or crawl on hands and knees.

8.9.2 Equipment Clearances. Minimum clearances between electrical and mechanical equipment shall be as required by NFPA 70, (reference 8m). Assure that practical means are provided for the removal/replacement of the largest and/or heaviest equipment item(s) located in the facility. Provide adequate pull space for all coils, heat exchangers, chillers, boiler tubes, and filters. Sufficient space shall be provided in above-ceiling areas to facilitate equipment O&M. For building designs utilizing interstitial floor distribution zones, further guidance is provided at Section 19.

8.9.3 Suspended/Mounted Mechanical Equipment. Where suspended and mounted equipment is installed, provide a minimum of 1700 mm (67 in) of clearance for headroom as required. In refrigeration equipment rooms, provide overhead clearances required by ASHRAE 15, (reference 8j). For any work station or location requiring maintenance access, which is not readily accessible from a 1800 mm (6 ft) high portable ladder, provide a fixed ladder and/or catwalk.

8.9.4 Air Distribution System Components. Outdoor air intake plenums, air handling unit casings, and distribution ductwork shall be designed to permit access for periodic cleaning or disinfection.

8.9.5 HVAC System Balancing Provisions. Adequate access shall be provided to facilitate operation, adjustment, and testing at all HVAC balancing and measuring points and equipment, including automatic and

manual damper operators, air terminal units, pilot tube ports, valves, and sensing devices.

8.10 Noise and Vibration Minimization.

8.10.1 Major Mechanical Equipment. All prime moving equipment shall be isolated to prevent transmission of resonant sound and vibrations to the structure.

8.10.2 Ductborne Noise Generation & Attenuation. Noise Criteria (NC) for individual rooms and spaces in the facility are provided at Appendix A of this document. The HVAC design shall minimize ductborne noise generation and transmission to maintain the required NC levels. The design shall in addition contain provisions to reduce or eliminate "crosstalk", or the audible transmission of verbal conversations from one room to the next, in examination rooms, physician's offices, and toilet rooms, to maintain patient privacy.

8.10.3 Duct lining. The utilization of duct lining materials is generally discouraged in facilities. These materials may harbor dust and moisture, providing an ideal environment for the propagation of pathogenic or noxious microorganisms. In addition, inevitable duct modifications or careless installation procedures lead to breaks in the duct lining sealer. No duct lining materials which are porous to the airstream may be utilized in any air distribution system serving inpatient treatment or bedroom areas (including all Critical spaces). Factory fabricated sound attenuators with liners which preclude the penetration of the acoustical packing material by the airstream may be utilized upstream of high efficiency final filters. Sound attenuators and internal equipment insulation for other inpatient areas shall be of the "hospital type", designated by the manufacturer for hospital critical space applications, with insulation lining passing the mold-growth test limitations of UL 181 and ASTM C 665, (reference 8n and 8o).

8.11 Interdisciplinary Coordination.

8.11.1 Smoke/Fire Dampers. HVAC zones should be designed to coincide with smoke zones whenever practicable. Ductwork penetrations of fire/smoke rated walls should be minimized, to in turn minimize the required number of smoke/fire dampers and complexity of controls. Coordinate with the architectural design to assure that necessary access for inspection or service of these dampers is provided.

8.11.2 Fire Protection. Air supply and exhaust systems shall be of the mechanical ventilation type and shall meet the requirements of NFPA 90A and 96, (references 8d and 8e). Duct Lining materials shall meet the smoke generation and flame spread limitations as required by MIL-HDBK-1008, (reference 8p).

8.11.3 Emergency Electrical Service. The HVAC system equipment serving Critical areas shall be connected to the essential electrical power system, to assure service continuation in the event of normal power disruption, in accordance with the requirements of NFPA 99 (reference 8c). Cooling, as well as heating, shall be maintained to Critical areas in the event of normal power outage.

8.11.4 Seismic Design Requirements. Refer to Section 6 for seismic provisions for the HVAC system equipment and components. Designers shall be responsible to assure that seismic bracing of HVAC piping is coordinated by design with thermal expansion compensation features, to allow for the necessary pipe movement with temperature changes.

8.11.5 Fuel Storage Requirements. Refer to individual Military Department Criteria.

8.12 Ventilation Design.

8.12.1 Ventilation Air Changes. Minimum air change rates for each space, for both outside air and total air, are provided at Appendix A. Ventilation rates contained in ASHRAE Standard 62-89 (reference 8q) shall be applied for spaces or applications not addressed by Appendix A. The minimum outside air change rate provided in Appendix A for Critical Care Spaces shall be maintained at all times, except as addressed elsewhere in this Section for Operating and Delivery Rooms during periods of non-use. Reduced outside air ventilation in noncritical areas may be considered during non occupied times. In addition, a Corrected Outside Air Ratio, calculated in accordance with ASHRAE 62-89 section 6.1.3.1, may be applied for non-critical spaces. The outside air ratio for non-critical high-occupancy spaces, including classrooms, waiting rooms, auditoriums, and conference rooms, may be adjusted in accordance with the provisions of ASHRAE 62-89 Section 6.1.3.4. when the maximum occupancy peaks for a duration of less than three hours.

8.12.2 General Exhaust Provisions. Exhaust systems shall be provided for Central Sterile Supply (Ethylene Oxide), animal holding areas, autopsy/morgue spaces, laboratory fume hoods, radioisotope hoods, bacteriological cabinet, kitchens, laundry, toilets, isolation rooms, equipment rooms, and other areas as noted in Appendix A or as designated on an individual project basis. No duct system conveying potentially hazardous exhaust (ETO, lab hoods, etc.) shall be connected with a general or toilet exhaust system. All exhaust discharge outlets shall be located above the building roof line and located to prevent short-circuiting to air intakes or other building openings. Exhaust fans shall be located at the end of the exhaust duct run (exhaust ducts to be under negative pressure).

8.12.3 Space Pressurization. The required pressurization of individual spaces, relative to adjacent spaces or corridors, is indicated at Appendix A. Where a negative or positive pressurization are required for a given space, that pressurization shall be maintained by the HVAC system under all conditions of operation, including periods of reduced ventilation or night setback.

8.12.4 Laboratory Ventilation. Exit corridors shall not be utilized to directly supply or exhaust air from the laboratory, although "transfer" of air to/from corridors may be utilized to establish required room pressurization. Negative pressurization of laboratories in relation to surrounding occupancies shall be maintained under all conditions of HVAC system and fume hood operation.

8.12.4.1 Exhaust Systems. Laboratory equipment utilized for personnel protection from hazardous chemical, microbiological, or radioactive airborne particles or gases shall be provided with independent exhaust systems in accordance with NFPA 99, (reference 8c). Exhausts from general chemical laboratory fume hoods located within a laboratory unit may be combined into central exhaust systems in accordance with guidance in

references 8c and 8g. Exhausts from hoods handling perchloric acid or other strong oxidizing agents, materials or agents requiring HEPA

filtration, or exhausts which, when combined, chemically interact or change the explosion/ignition limits, may not be combined. Additional guidance for hood and exhaust design is contained at references 8a, 8b, 8c, 8g, 8j, and 8q. Exhaust duct discharge height shall be above the building recirculation cavity boundary, or approximately 50% of building height above the roof: variances may be required or permitted based upon wind tunnel testing or analysis in accordance with guidance in the ASHRAE Handbook of Fundamentals, latest edition. In all cases exhaust discharge shall have sufficient stack height, velocity, and distance from building openings, outside air intakes, or recirculating air currents, to preclude reentry into the building. Air velocity in exhaust ductwork shall be sufficient to transport the contaminant vapors, fumes, dusts, or other particulate matter for which the fume hood(s) is designed.

8.12.4.2 Laboratory Fume Hoods, General. Fume hoods shall be located in areas of minimal air turbulence, away from doors, windows, and traffic, to minimize disruption of required sash airflow. HVAC system/fume hood controls shall be designed such that operation or shutdown of any fume hood in a given space will not disrupt the required room air balance or the required sash airflow at other hoods operating in the space. General purpose laboratory fume hoods that control personnel exposure to chemicals and physical contaminants shall have a minimum sash face velocity of 0.508 m/s (100 fpm). Fume hoods shall be provided with audible and visual alarms to indicate inadequate sash airflow conditions.

8.12.4.3 Radioactive Material/Radioisotope Hoods. Duct systems serving hoods for radioactive material shall be constructed of acid resistant type stainless steel for their entire length. Ductwork shall be flanged with neoprene gasketed joints to facilitate dismantlement for decontamination. Fume hood exhaust shall remain in constant operation, and shall be filtered with carbon and/or HEPA filters as required to meet Nuclear Regulatory Commission (NRC) requirements. The location of filters in the system shall be chosen to best facilitate their safe removal, disposal, and replacement by maintenance personnel. All filters shall be automatically monitored to provide indication that changeout is required. All hoods shall comply with requirements of the Nuclear Regulatory Commission.

8.12.4.4 Canopy Hoods for Prosthetic Dental Laboratories. Canopy hoods for Prosthetic Dental Laboratories, and exhaust ductwork extending for a distance 3000 mm (10 ft) downstream from the hood connection, shall be fabricated of material which is corrosion resistant to the caustic fumes emanating from boil-out tanks and casting activities conducted in the laboratory.

8.12.4.5 Biological Safety Cabinets (BSCs). Class, Type, and location of BSCs shall be as directed by the using agency. Class II BSCs are provided with HEPA filtration of recirculated air and/or building exhaust, and are provided in such areas as Microbiology and Mycology. The required open door/sash face velocity for Class I and Class II Type A BSCs shall be 0.381 m/s (75 fpm), and for Class II Types B1, B2, and B3, shall be 0.508 m/s (100 fpm). For further information of biological safety hood Class, Type, application, and exhaust requirements, refer to references 8a, 8r, 8s, and 8t.

8.12.4.6 Perchloric Acid Hoods. Hoods for handling of perchloric acid and other strong oxidizing agents, and the associated exhaust ductwork,

shall be constructed of stainless steel. Internal water spray systems shall be provided for hood and all ductwork to facilitate the periodic washdown. Joints shall be welded and ground smooth, and all ductwork pitched back toward the hood to facilitate drainage. More detailed guidance is provided by the ACGIH publication.

8.12.4.7 Containment Laboratories BL-3 and BL-4). These laboratories deal primarily with indigenous or exotic agents which may cause serious or potentially lethal disease as a result of exposure by inhalation. The HVAC design for these laboratories shall assure the continuous negative pressurization and exhaust of the space. The exhaust air from these spaces shall not be recirculated to any other area of the building, but shall be transported through dedicated exhaust ductwork to be directly discharged to the outside of the building. Design of BL-3 and BL-4 laboratory exhausts shall comply with latest editions of OSHA and other Federal regulations.

8.12.5 Exhaust Canopies. Exhaust canopies shall be provided for equipment or appliances generating high heat or moisture (steam) loads, such as glassware washers, boilout tanks, drying ovens, sterilizers, and stills. In some cases, specially designed canopy hoods may be necessary to control personnel exposure to hazardous chemical vapors. Canopy hood design shall comply with the ACGIH data for "Canopy Hood" (reference 8b).

8.12.6 Laminar Flow Clean Benches. These horizontal flow hoods shall be used in pharmacy for preparing intravenous fluids and similar laboratory processes. Clean benches recirculate room air and do not require exterior air supply or exhaust systems.

8.12.7 Bench-Back Slot Hoods. Slot hoods are typically built into the wall behind laboratory benches to exhaust vapors, gases, and odors that are released with little energy or velocity. Typical applications are laboratories, brace shops, and other spaces in which volatile chemicals are routinely used. Design of these hoods shall be in accordance with ACGIH guidelines, with a slot velocity of 10.2 m/s (2,000 ft/min).

8.12.8 Portable Bench-Top Hoods. Portable hoods with glass viewing panels and interior lighting may be used to control chemical contaminants of minor toxicity and odors. They shall be attached to built-in exhaust outlets with flexible ducts. Each built-in exhaust system outlet shall provide a minimum of 0.0755 m^3/s (160 cfm) or a face velocity of 0.38 m/s (75 ft/min) at the hood, whichever provides the maximum mass flow of air. The exhaust duct opening shall be provided with a blast gate and sealing plug to stop air flow when the unit is not in service.

8.12.9 Waste Anesthesia Gas Exhaust (WAGE). In each space utilized routinely for the administration of inhalation anesthesia or analgesic agents, a Waste Anesthesia Gas Exhaust (WAGE) disposal system for removal of waste anesthetizing gases shall be provided. Coordinate required system vacuum pressure and terminal fittings with using Military Department Anesthesiology and Oral Surgery Departments on an individual project basis.

8.12.10 Medical Equipment. See Section 16 for special ventilation requirements of medical equipment.

8.12.11 Ethylene Oxide. Sterilizers, aerators, and manifold rooms shall be directly exhausted to the outside by a dedicated exhaust system. ETO storage and supply systems and ventilation design shall be in accordance with 29 CFR Ch. 17 and the latest industry guidance. Ventilation provisions currently include such features as exhaust inlets

above and below sterilizer door, waste water discharge, and floor drain. Ventilation of bottle storage rooms is also required. An audible and visual alarm shall be provided to warn of loss of airflow in the exhaust system. Increasingly, local and state regulations prohibit or limit the discharge of ETO to the environment. These shall be considered applicable to DOD medical facilities, and in such cases the design shall utilize ETO "scrubbers" or other approved technologies to prevent or reduce ETO emissions as required.

8.12.12 Kitchen Hoods. Exhaust hoods in the kitchen area are to be the type utilizing 80 percent unconditioned air and having an exhaust rate of not less than 0.0022 m^3/s per square meter (50 cfm per square foot) of face area. Face area is defined for this purpose as the open area from the exposed perimeter of the hood to the average perimeter of the cooking service. If economically justified, hood makeup air should consist of up to 80% outside air tempered, through heat recovery equipment, by the exhaust. Equip all hoods over the cooking service equipment with fire extinguishment systems, automatic washdown and grease extractors, and heat-actuated fan controls. Cleanout openings, and required fire protective enclosures and separations, shall be provided in horizontal exhaust duct systems serving these hoods grease hood exhaust ducts in accordance with NFPA 96.

REFERENCES

8a. American Society of Heating, Refrigerating and Air-Conditioning Engineers, Inc. (ASHRAE) HANDBOOK Series. Volumes (Subjects) in the ASHRAE HANDBOOK Series (scheduled revisions every 4 years) are:

8a (1) Fundamentals
8a (2) Systems
8a (3) Equipment
8a (4) Applications
8a (5) Refrigeration

8b. ACGIH, "Manual of Recommended Practices for Industrial Ventilation."

8c. NFPA 99, "Standard for Health Care Facilities."

8d. NFPA 90A, "Standard for the Installation of Air Conditioning and Ventilation System."

8e. NFPA 96, "Cooking Equipment, Vapor Removal."

8f. NFPA 801, "Facilities for Handling Radioactive Materials."

8g. NFPA 45, "Labs Using Chemicals".

8h. NFPA 101, "The Life Safety Code".

8i. Joint Services Manual TM 5-785, NAVFAC P-89, AFM 88-29, "Engineering Weather Data" .

8j. ASHRAE 15, "Safety Code for Mechanical Refrigeration".

8k. ASHRAE 34, "Number Designation and Safety Classification of Refrigerants".

8l. SMACNA, "HVAC Duct System Design".

8m. NFPA 70, "National Electrical Code".

8n. UL 181, "Standard For Safety, Factory-Made Air Ducts".

8o. ASTM C 665, "Mineral-Fiber Blanket Thermal Insulation".

8p. Not used.

8q. ASHRAE 62-89, "Ventilation For Acceptable Indoor Air Quality," American Society of Heating, Refrigerating and Air-Conditioning Engineers, Inc.

8r. OSHA - Part 1910, "Occupational Safety and Health Standards."

8s. CDC-NIH, "Biosafety in Microbiological and Biomedical Laboratories."

8t. Standard 49, "Class II (Laminar Flow) Biohazard Cabinetry", National Sanitation Foundation.

SECTION 9: PLUMBING AND MEDICAL GASES

9.1 General. This section provides design guidance for plumbing and medical gas systems. This section is separated into two parts: plumbing systems and medical gas systems. For plumbing-related issues associated with fire protection systems, see Section 13.

9.2 Plumbing Systems. Plumbing systems include domestic cold and hot water; sanitary, storm, and industrial (acid) waste drainage; water treatment (such as softening, deionization, reverse osmosis); and landscape irrigation. Water systems associated with the HVAC systems, i.e. the water or hydronic cooling and heating systems are discussed in Sections 7 and 8.

9.2.1 Plumbing System Performance. Plumbing systems shall be designed to be safe, reliable and maintainable. The life cycle cost effectiveness of material selection and installation techniques will be considered. This includes incorporation of design features such as valving for isolation and balancing of all risers and branch feeds to specific areas, prevention of unintended backflow and cross connection, duplex components where warranted, location and positioning of components, and the establishment of minimum space requirements.

9.2.1.1 Design Guidance. Detailed design guidance may be provided by the Military Departments. Plumbing, water supply, backflow prevention, and drainage system design should comply with the National Standard Plumbing Code (NSPC) (reference 9a) and other national or local codes.

9.2.1.2 Seismic Requirements. Seismic design criteria is provided in Section 6. The plumbing-related criteria shown in the provisions for mechanical systems in Section 6 shall be incorporated into the design if it is classified as an essential facility.

9.2.1.3 Corrosion Protection. All piping which will be installed in an environment that supports galvanic reaction shall be protected from corrosion in accordance with Military Department criteria. Typically this includes underground or submerged piping systems. The National Association of Corrosion Engineers' Book of Standards and their applicable Recommended Practices (reference b) shall be consulted for design guidelines.

9.2.2 Potable Water Supply System, Continuity of Service. Provide a minimum of two water services for hospitals with each service fed from separate mains and designed for full demand (serving potable, process, and fire protection system) and entering the building at different locations. The purpose is to provide an uninterrupted supply of water in case of a water main break. If two separate mains are not available, on-site storage shall be considered. Where practical, loop the mains around the facility and provide sectionalizing valves. The water supply to plumbing systems serving drinking, bathing, and food, medical, and pharmaceutical processing fixtures shall be potable.

9.2.3 Water Treatment. A water analysis will be prepared to determine the type of water treatment and to size water purification systems. Water treatment shall be provided where necessary to furnish a piece of equipment or fixture with water quality essential for its operation or function. The selection of an appropriate water treatment method is critical. A balance between corrosion and scaling control is the ultimate goal. Too much corrosion control may well induce scaling and vice versa.

9.2.3.1 Corrosion-Resistant Material. The design shall include the use of corrosion-resistant materials where not cost prohibitive, protective coatings, and oxygen removal components prior to incorporating chemical treatments. When these techniques are inadequate to eliminate corrosion and scaling concerns, then water treatment shall be applied.

9.2.3.2 Scaling Control. General guidance for scaling control is to soften to between 50 mg/L (3 gr/gal) and 85 mg/L (5 gr/gal) when the water supply to the facility has a hardness of 170 mg/L (10 gr/gal) or more. Maintain the hardness level of the water supply to Dental Clinics between 50 mg/L (3 gr/gal) to 85 mg/L (5 gr/gal). Specialized equipment may require lower hardness levels and water characteristics shall be analyzed to determine the optimum treatment.

9.2.4 Water Purification Systems. Water purification is the process by which contaminants or impurities, which affect undesirably the performance of specific equipment or the outcome of medical and laboratory tests, are removed from the water. Water purification systems include reverse osmosis, deionization, softening, ultrafiltration, and UV sterilization. The using Military Department in conjunction with the Design Agent shall determine the water quality required to support their medical function.

9.2.4.1 Water Type. Type III grade water, as specified in ASTM D 1193 (reference 9c), shall be provided for all heat exchangers used for steam humidifiers, electrically powered sterilizers, medicine preparation processes in pharmacies, water for reagent makeup in laboratories, distillation units, Renal Dialysis, Glassware Washing, and Central Supply. Reagent water, with its corresponding electrical resistivity in mega-ohms, where required, shall be provided per ASTM D 1193. Laboratories in large Medical Centers may require ASTM D 1193 Type I water that will be supplied by a local subsystem. A combination system may be considered for large facilities with reverse osmosis being considered for pretreatment and deionization for final treatment. Additional systems and use areas for a specific project will be determined by the using Military Department.

9.2.4.2 Design Guidance. Critical central system components shall be duplex. Specialty components such as plastic faucets and coated pumps shall be considered for incorporation into the design.

9.2.5 Potable Hot Water Systems. Hot water is essential to a facility since there is a constant need for sanitary cleaning. Extreme care is needed in the design of the hot water system. Excessive system water temperature or pressure can lead to serious injuries among patients and staff.

9.2.5.1 Design Guidance. The following general design guidance shall be incorporated as applicable:

(a) Tempering. A tempering valve for controlling hot water temperatures will be required where different design temperatures are supplied from a single heater for a given facility, where the storage capacity of a tank is increased by heating water in excess of the design temperature, or where a tankless type water heater is used.

(b) Safety Devices. Safety devices such as pressure balancing valves for showers shall be considered.

9.2.5.2 Design Temperatures. Minimum protection time before scalding decreases rapidly as the temperature increases. What is an appropriate safety factor for healthy adults to avoid injury may not be safe for some patients, particularly children and the aged. Controls such as tempering valves and safety solenoids to limit the temperatures to avoid inadvertent scalding shall be incorporated into the design. The temperature at which the hot water will be generated shall be determined by the design process considering a number of factors such as usage rates, storage requirements, distribution system layout, and multiple design temperature requirements. The hot water temperatures at the point of use shall not exceed the following:

(a) Supply and Utility Areas. Central Sterile Supply, soiled utility rooms equipped with bedpan washers, Cart Wash areas, and special pathological wash areas shall be provided with 60 degrees C (140 degrees F) hot water.

(b) Kitchen Areas.

(1) Dietary Area. 41 degrees C (105 degrees F).

(2) Dishwashing (automatic equipment) and Pot Washing. 82 degrees C (180 degrees F). Booster heaters shall be provided to obtain this temperature.

(c) Toilets, Public. Public and Staff Toilets in separate and distinct administration buildings. 41 degrees C (105 degrees F).

(d) Toilets, Patient. Patient Toilets, Showers, and Bathing Facilities. 41 degrees C (105 degrees F).

(e) All Others. 41 degrees C (105 degrees F).

9.2.5.3 Temperature Maintenance.

(a) Heat Loss. Most facilities are of sufficient size that the hot water supply system's heat loss and subsequent temperature decrease is beyond acceptable limits. Therefore, a means of controlling the heat loss must be provided in order to maintain the required hot water temperature.

(b) Recirculation. Typically, a recirculation system is incorporated into the design. There are several system types as well as variations and combinations. The selected type shall be justified, including the type of circulation - pumped versus gravity. Provisions for isolating and balancing the systems shall be incorporated into the design.

(c) Recirculation Alternative. Heat tape applied to the supply system to maintain the water temperature is an alternative to a recirculation system. However, the cost effectiveness of this alternative must be analyzed and the ability to maintain it and its associated cost shall be verified.

9.2.6 Plumbing Fixtures. Plumbing fixtures should conform generally to Federal Specification WW-P-541 (reference 9d) or American National Standards Institute (ANSI) standards series A112 and Z124 (reference 9e). For uniformity, all fixtures shall be identified by the Joint Schedule Number (JSN) provided in MIL-STD-1691 (reference 9f). Quantities of fixtures shall be in accordance with the DMFO Program For Design. Refer

to Military Department criteria and guide specifications for water conservation requirements.

9.2.6.1 Drinking Water Coolers. Locate public drinking water coolers convenient to each public waiting room and as directed by the using Military Department. The standard rating and performance shall conform with ARI Standard 1010 (reference 9p).

9.2.6.2 Handicapped Fixtures. Provide handicapped fixtures in accordance with the requirements of section 12.

9.2.7 Sanitary Drainage System. The sanitary waste system shall be connected to an existing sewer system. Where an existing installation sewer does not have adequate capacity or is not available, other means such as connection to a nearby public sewer or private treatment and disposal shall be incorporated into the design. When the sanitary waste system is connected to a local public system, code requirements in excess of the NSPC (reference 9a) imposed by the local regulatory agencies shall be considered.

9.2.7.1 General Design Guidance. The sanitary waste system shall be designed to avoid excessive backpressure and aspiration effects. Adequate cleanouts shall be arranged to permit access to all sections of the waste system for cleaning. The cleanouts shall be located to avoid disruption of the medical functions. When any facility sanitary waste requires lifting, the lifting equipment shall be a duplex design. The sanitary waste system shall be provided with vent piping to remove all waste gases and odors and to limit air pressure variation. Waste and vent piping shall be designed in accordance with standard design criteria.

9.2.7.2 Special Design Guidance. Fixtures and equipment used in sterile and food preparations, processes, or storage shall be protected from contamination by backflow of waste. An indirect waste line such as an air break or physical disconnection (open drain) at their waste outlet shall be incorporated into the system design. Equipment which cannot be easily cleaned shall also be protected. Included are sterilizers, glass washers, refrigerators, kitchen equipment, film X-ray processors, dental lab equipment (boilout assembly tanks), and vacuum system separator tanks.

9.2.7.3 Other Plumbing Fixtures and Appurtenances. Special requirements for facilities include, but are not limited to, interceptors, flush rim drains, garbage grinders, grease traps and separators for flammables. Interceptors will be provided when precious materials or heavy metals such as silver and barium may be sediment in the waste such as in Cast Rooms, Prosthodontics Laboratories, Barium Procedure areas, film X-ray processing, and in blood analyzers. The interceptors will be cast iron; barium interceptors will be aluminum. Flush rim floor drains will be provided in Autopsy and similar areas. Garbage grinding disposers will be provided in Kitchens on dishwashers, pot and pan sinks, and other sinks as required. Grease traps shall be provided with grease-producing kitchen equipment such as prewash sinks, pot washers or sinks, and floor drains serving kettles. Separators shall be provided where oils are to be found such as ambulance garages and mechanical equipment rooms and where flammable liquids are intended to be discharged such as in laboratory and housekeeping operations.

9.2.7.4 Special Purpose Waste Lines. Separate waste lines shall be provided for acid waste and radioactive waste from laboratories, darkrooms and nuclear medicine treatment rooms. The acid waste will utilize acid

resistant pipe and pass through a dilution tank before combining with building waste. If large quantities of acid or strong base solutions are to be discharged into the waste system, neutralization will be required. There are various radioactive materials to be found in a facility. The particular radioactive waste for a given facility must be identified. The appropriate prescribed manner of disposal in accordance with federal and local safety standards shall be incorporated into the design.

9.2.8 Storm Water Disposal. The roofs and paved areas shall have their storm water, either direct or from runoff, drained and disposed. The means of disposal shall preferably be to an existing storm sewer. If one does not exist or the existing one does not have sufficient capacity, an acceptably alternative means such as ponds, basins, or dry wells shall be incorporated into the design. The storm water disposal must be consistent with the installation's storm water management plan.

9.2.8.1 Discharge. Storm water shall not be discharged into sanitary sewers unless it is rated as a combination system and no alternative cost-effective means is available. When storm water is discharged into a combination system, the connection at the point of combining with the sanitary waste shall include a trap.

9.2.8.2 Sizing. Sizing of the storm water drainage system shall be based on the guidance and precipitation rates shown in the NSPC, Appendix A (reference 9a). Local data can be used if it is proven to be based on U.S Weather Bureau specified sampling methods. Refer to Section 3.

9.2.9 Gas Service. Gas service requirements for facilities include the following: a fuel source for heating water and air to condition space, for heating water for domestic and process applications, for domestic purposes such as cooking, a fuel source to generate steam for humidification and sterilization processes, and as a point-of-use heat or flame source to support medical and laboratory functions. The requirements for space heating and humidification shall be coordinated with the HVAC systems design. The gas service for medical and laboratory functions is discussed in the Medical Gas Systems part of this Section.

9.2.9.1 Design Guidance. The gas system design shall be in accordance with National Fire Protection Association (NFPA) 54 and 58 (references 9h and 9i).

9.2.9.2 Liquefied Petroleum Gas. When gas service from a utility is not available, an alternative is liquefied petroleum gas (LPG). In some areas, the use of oil as a fuel is either directly or surcharge cost prohibitive. LPG serves as an alternative to fuel oil.

9.3 Medical Gas Systems. Medical gas systems include: compressed air for medical and dental patient and laboratory use; vacuum for medical and dental patient use, laboratory dust collection, and waste anesthesia gas disposal; and gases for patient, laboratory, and equipment use. The system design shall include a centralized gas storage, compressor, or vacuum generator, a piped distribution system, and connection outlets. Point-of-use or decentralized systems are also included.

9.3.1 Design Guidance. Medical gas systems shall be designed to be safe, reliable and maintainable. The life cycle cost effectiveness of material selection and installation techniques shall also be factored into the design. This includes incorporation of design features such as alarm panels, isolation or shutoff valves, pressure gauges, prevention of cross connections, duplex components where warranted, location and positioning

of components, and the establishment of minimum space requirements. The following applies to detached clinics.

9.3.1.1 Medical Clinics. Medical clinics are not normally authorized centrally piped medical gas or vacuum systems. However, if a freestanding detached clinic is in close proximity to a facility with central systems, the central system may be extended to the clinic, if there is a need for these systems in the clinic, there is sufficient excess capacity and it is life cycle cost effective.

9.3.1.2 Dental Clinics. Centrally piped systems shall be provided, as required, for dental compressed air (DCA) at 620 kPa (90 psig) low vacuum, high volume oral evacuation (DLV); high vacuum, low volume oral evacuation (DHV); high volume evacuation for laboratory dust use (LDE); dental laboratory air at 210 kPa (30 psig); and surgical handpiece drive air (SHDA). Gas (natural or propane) shall be provided as required to support prosthodontic and orthodontic laboratories and Dental Treatment Rooms (DTR's). Freestanding clinics with less than 5 chairs shall have the centrally piped and point-of-use air and medical gas service options life cycle cost analyzed during the concept design phase to determine the least costly option.

9.3.1.3 Medical Gas System Testing. Medical gas systems shall be installed and tested in accordance with NFPA 99 (reference 9j). Testing shall include, but not be limited to, cross-connection, purity, pressure, and alarm testing. All testing and certification of medical gas systems should be done by an independent testing agency, not the equipment supplier or Contractor.

9.3.1.4 System Control Valves. All medical gas centrally piped systems shall be provided with shut-off valves and zone valve box assemblies in accordance with NFPA 99 (reference 9j).

9.3.1.5 Warning Systems. Medical gas warning systems shall be provided for all central piped systems in accordance with NFPA 99 (reference 9j).

9.3.1.6 Gas System Sources (Storage). Gas system sources or storage provisions shall be designed in accordance with NFPA 99 (reference 9j). Flammable and nonflammable storage containers shall be stored in separate enclosures. Nonflammable gases can be stored together.

9.3.1.7 Color Coding and Labeling. The gas content of medical gas piping systems shall be readily identifiable by appropriate labeling with the name of the gas contained. Such labeling shall be by means of metal tags, stenciling, stamping, or with adhesive markers in a manner that is not readily removable. Labeling shall appear on the piping at intervals of not more than 6 m (20 ft), at least once in each room, and each story traversed by the piping system per NFPA 99 (reference 9j). Color identification of piping shall be in accordance with the gases and colors indicated in Compressed Gas Association (CGA) Pamphlet C-9, Standard Color-Marking of Compressed Gas Cylinders Intended for Medical Use in the United States (reference 9k). System components shall also be labeled for identification and to prevent tampering and inadvertent closing. In particular, shutoff valves and pressure gauges shall be labeled in accordance with NFPA 99 (reference 9j).

9.3.1.8 Medical Gas Systems Outlets. Appendix A contains guidance for allocation and location of medical gas systems and outlets. Appendix A includes the systems listed in Table 9-1. The number of outlets shown in

Appendix A are intended for large facilities programmed with a broad scope such as medical centers, comprehensive health care centers, and hospitals. Smaller facilities such as clinics will not require all of the items indicated. Therefore, the tables should be used judiciously when designing medical gas systems for small facilities. The number of outlets/inlets shown in Appendix A are the "maximum" allowed. Additional outlets/inlets may be provided when justified, requested by the using Military Department, and approved by DMFO. All systems shall comply with the latest edition of NFPA 50, 99, 70, (references 9l, 9j, and 9m) and the requirements of Compressed Gas Association Pamphlet No.P-2.1 (reference 9n).

9.3.2 Compressed Air Systems. The following compressed air systems are to be dedicated to their given application except for the following exception. Dental compressed air systems can be used as the compressed air source for laboratory air. Other compressed air sources such as HVAC controls compressed air systems shall not be used as a source for medical, dental, laboratory, and surgical handpiece drive air requirements.

9.3.2.1 Medical Compressed Air (MCA). The medical air (MCA) system shall be an independent central piped system consisting of two or more medical air compressors and a central receiver conforming to the requirements of NFPA 99 (reference j). It shall be used only for medical functions requiring breathable air or for air-driven instruments which discharge into the pharynx. The MCA system shall not be used to satisfy the other compressed air requirements. The system shall be sized such that upon failure of one compressor the remaining compressor(s) can supply 100% of the total system demand. The system design shall include automatic operation of the compressors including alternating lead/lag status.

(a) Air Standards. The medical air compressor(s) shall be oil-free specifically designed and manufactured for this purpose. MCA quality shall be in accordance with "oil-free, dry air" as defined in NFPA 99 (reference j) with a pressure dewpoint of 345 kPa (50 psig) at less than 4 degrees C (39 degrees F). Intake air shall be direct from outdoors or of quality better than outside air (i.e., prefiltered air for use in operating room ventilation). Locate intake in accordance with NFPA 99 (reference j). MCA shall be supplied at a minimum of 345 kPa (50 psig) at all outlets with a tolerance of +35 kPa (5 psig).

(b) Components. MCA shall be provided by two or more compressors with provisions for automatic, alternating, and simultaneous operation. The compressors shall be sized such that if any one compressors fails, the remaining compressor(s) shall provide 100% of standard system demand. Provide an alarm to indicate compressor failure. All system components downstream of the compressors shall be sized for 100% standard system demand and be either duplexed of capable of being bypassed.

(c) Demand. MCA system demand shall meet the peak flow requirements shown in Table 9-2 as a minimum. The simultaneous use factors shall be used with judgement and modified to adapt to special conditions. Consult with the using Military Department in conjunction with the Design Agent to verify any modifications.

TABLE 9-1

MEDICAL GAS SYSTEMS [1]

Compressed Air	Appendix A Abbreviation [2]	Nominal Description
Medical Compressed Air	MCA	345 kPa (50 psig)
Dental Compressed Air	DCA	620 kPa (90 psig)
Laboratory Air	LA	210 kPa (30 psig)
Process Air	PA	830 kPa (120 psig)
Vacuum		
Medical Vacuum	MV	65 kPa (19 in-Hg)
Dental High Vacuum	DHV	65 kPa (19 in-Hg)
Dental Low Vacuum	DLV	27 kPa (8 in-Hg)
Laboratory Dust Evacuation	LDE	10 kPa (3 in-Hg)
Gases		
Oxygen	OX	345 kPa (50 psig)
Nitrous Oxide	NO	345 kPa (50 psig)
Nitrogen	NI	1105 kPa (160 psig)

1. Other medical gas systems included in this Section but not in Appendix A:
   - Surgical Handpiece Drive Air (SHDA)
   - Waste Anesthesia Gas Disposal (WAGD)
   - Ethylene Oxide (ETO)
   - Gas (natural or propane) - flame or heat source

2. Cross reference to previously used abbreviations:

New	Old	System Title
MCA	MA	Medical Air
DCA	DA	Dental Air
DHV	HIVAC	High Vacuum Oral Evacuation
DLV	OE	Oral Evacuation
LDE	HVLE	High Volume Laboratory Evacuation

TABLE 9-2

MEDICAL COMPRESSED AIR SYSTEM DEMAND

Air Outlet/Equipment	Design Flow in L/s (SCFM) (Free Air) Per Unit	Per Room	Per Bed	Simultaneous Outlet	Use Factor %
Anesthetizing Locations:					
Special Surgery & Cardio-Vascular			.2(.5)		100
Major Surgery & Orthopedic		.2(.5)			100
Minor Surgery		.2(.5)			75
Emergency Surgery		.2(.5)			25
Radiology		.2(.5)			10
Cardiac Catheterization		.2(.5)			10
Ventilators	1.7(3.5)				100
Delivery Room		.2(.5)			100
Acute Care Locations:					
Recovery Room/Surgical			.9(2.0)		25
ICU/CCU			.9(2.0)		50
Emergency Room			.9(2.0)		10
Neonatal ICU			.7(1.5)		75
Dialysis Unit			.2(0.5)		10
Recovery Room/O.B.			.9(2.0)		25
Subacute Care Locations:					
Nursery		.2(.5)			25
Patient Rooms		.2(.5)			10
Exam & Treatment	.5(1.0)				10
Pre-Op Holding				.7(1.5)	10
Respiratory Care	.5(1.0)				50
Pulmonary Function Lab				.5(1.0)	50
EEG & EKG				.5(1.0)	50
Birthing & Labor/Delivery	.5(1.0)				50
Other:					
Anesthesia Workroom		.7(1.5)			10
Respirator Care Workroom	.7(1.5)				10
Nursery Workroom		.7(1.5)			10
Equipment Repair		.7(1.5)		.7(1.5)	10
Med. Laboratory				.7(1.5)	25

NOTE: This is a generic listing and must be used to include specific room names in Appendix A.

9.3.2.2 Dental Compressed Air (DCA). A central piped dental compressed air (DCA) system with two or more oil-free compressors and other components described herein shall be provided in accordance with NFPA 99 (reference j) for all facilities that require DCA as listed in Appendix "A". DCA shall be used for utility control in dental units, power for lifts, locks, rotary and other pneumatic dental instruments and equipment. DCA, unlike MCA, is not used for breathing or respiratory support of any kind and shall not be used to satisfy MCA requirements. Air which is normally used for laboratory restorative and fabrication techniques may be provided by the DCA system. The DCA system may also provide air for the SHDA system. However, this is not a recommended practice because the typical SHDA demand is much greater than the DCA. The DCA system performance tends to be adversely affected when the systems are served by a common compressor.

(a) Air Standards. DCA shall be oil-free air with the following air standards as maximums:

Contaminant	Maximum Limit
- Water	Dry to a pressure dewpoint of 4^{0} C (39° F) at not less than 690 kPa (100 psig)
- Condensed hydrocarbons	Less than 0.1 mg/L by weight (0.1 parts per million (ppm)) .
- Permanent particulates	Less than 1.0 mg/L by weight (1.0 ppm).

Intake air shall be direct from outdoors or of quality better that outside air (i.e., prefiltered air for use in dental treatment rooms). DCA shall be supplied to the outlets at a minimum pressure of 620 kPa (90 psig) with a tolerance of +35 kPa (5 psig).

(b) Components. DCA shall be provided by two or more equally sized compressors, with provisions for automatic, alternating, and simultaneous operation. Each compressor shall be sized to provide 65% of standard demand. Provide an alarm to indicate compressor failure. All system components downstream of compressors shall be sized for maximum combined compressor output.

(c) Combined Systems. In-line pressure regulators shall be provided when DCA and dental LA systems are served by a common compressor. Each laboratory supply main shall have a pressure regulator.

(d) Demand. The system shall be sized using the following criteria.

(1) Select a DTR Usage Factor:

Number of DTRs	DTR Usage Factor (DUF)
1 - 3	1.0
4 - 6	.9
7 - 12	.8
13 - 19	.7
20 up	.6

(2) DTR Demand = No. of DTRs X 1.42 L/s X DUF

(3) Select a lab usage factor:

Number of Technicians	Lab Usage Factor (LUF)
1 - 5	.6
6 - 10	.5
11 - 19	.4
20 up	.3

(4) Lab Demand =

No. of Technicians	X .472 L/s X LUF
+ No. of sand/shell blasters	X 1.888 L/s X LUF
+ No. of air chisels	X 1.415 L/s X LUF
+ No. of denture presses	X .472 L/s X LUF
+ No. of microblasters	X 2.831 L/s X LUF
+ No. of high speed handpieces	X 1.415 L/s X LUF

(5) Sterilization Demand = No. of handpiece purge stations X .472 L/s.

(6) Standard demand =
DTR demand + Lab demand + Sterilization demand.

(7) Compressor size = .65 X Standard demand

(8) The receiver shall be sized based on Table 9-3.

TABLE 9-3

RECEIVER SIZE

NUMBER OF DTR's	Liters (Gallons) PER DTR
1 - 6	38 (10)
7 - 9	34 (9)
10 - 12	30 (8)
13 - 15	26 (7)
16 - 18	23 (6)
19 - 21	19 (5)
over 21	15 (4)

9.3.2.3 Laboratory Air (LA). The medical or dental laboratory air (LA) system shall be a central piped system consisting of two or more oil-free compressors and a central receiver conforming to the requirements of NFPA 99 (reference 9j). The system shall be sized such that upon failure of one compressor the remaining compressor(s) can supply 100% of the total system demand. Either LA system may be combined with the dental air system and shall not be used to satisfy MA requirements.

(a) Air Conditions. Air compressors used for LA shall be oil-free specifically designed and manufactured for this purpose. LA quality shall be in accordance with "oil-free, dry air" as defined in NFPA 99 (reference 9j) with a dewpoint of 1 degree C (33 degrees F). Intake air shall be direct from outdoors or of quality better than outside air (i.e., prefiltered air for use in operating room ventilation). Locate

intake in accordance with NFPA 99 (reference j). The LA system shall be oil-free air with the following air standards as maximums:

Contaminant	Maximum Limit
- Water	Dry to a pressure dewpoint of 4^0 C (39° F) at not less than 690 kPa (100 psig)
- Condensed hydrocarbons	Less than 0.1 mg/L by weight (0.1 parts per million (ppm))
- Permanent particulates	Less than 1.0 mg/L by weight (1.0 ppm)

LA shall be supplied at a minimum of 210 kPa (30 psig) for dental laboratories and 345 kPa (50 psig) for medical laboratories, with a +35 kPa (5 psig) tolerance.

(b) Components. LA shall be provided by two equally sized compressors with provisions for automatic, alternate, and simultaneous operation. Each compressor shall be sized to provide 65% of standard demand. Provide an alarm to indicate compressor failure. All system components downstream of compressors shall be sized for maximum combined compressor output.

(c) Demand. The LA system flow rate shall be determined by the number of work stations and their function plus the requirements for laboratory equipment. The using Military Department shall provide this information. The designer in conjunction with the Design Agent shall establish the flow rates. Medical LA system flow rate demand shall be 0.5 L/s (1 cfm) per outlet. The simultaneous use factors shall be as follows:

TABLE 9-4

MEDICAL LABORATORY AIR SYSTEM DEMAND

No. of Outlets	Use Factor (%)	Minimum L/s (CFM)
1 - 2	100	
3 - 12	80	1.4 (3)
13 - 38	60	4.7 (10)
39 - 115	40	11.8 (25)
116 - 316	30	23.6 (50)
317 - 700	20	44.8 (95)

9.3.2.4 Process Air (PA). Process air (PA) may be a centrally piped system when warranted by the application such as in a large facility. Applications such as medical service column adjustors, shop operations, and door operators are examples. The using Military Department in conjunction with the Design Agent will identify PA requirements. Any applications proposed by the A-E shall be approved by the Military Department and the Design Agent.

(a) Air Conditions. PA is not required to be oil free. The specific conditions shall be based on the requirements of the equipment associated with the given application.

(b) Demand. The PA shall be supplied to the point of use at pressures up to 830 kPa (120 psig). The actual pressure shall be verified

with the user in conjunction with the Design Agent. A pressure regulator at the outlet is recommended. The type of compressor may be restricted for applications with a pressure requirement greater than 690 kPa (100 psig). The flow rate shall be based on the requirements of the specific applications.

9.3.2.5 Surgical Handpiece Drive Air (SHDA) Systems. SHDA may be used as a substitute for nitrogen powering pneumatic surgical handpieces used in dental procedures. SHDA is not used for breathing or respiratory support. SHDA must be a separate system from DCA and dental LA; however, DCA may be used as a first stage of compression. The DCA is further compressed by the SHDA system to the specified quality and pressure required for its application.

(a) Air Conditions. The quality of SHDA relative to specific contaminates shall be per the following limits:

Contaminant	Maximum Limit
- Water	Dry to a pressure dewpoint of -40°C (-40°F), at not less than 1035 kPa (150 psig).
- Condensed hydrocarbons	Less than 0.1 mg/L (0.1 parts per million (ppm)) by weight.
- Permanent particulates	Less than 1.0 mg/L (1.0 ppm).

SHDA shall be supplied to the outlets at 1035 kPa (150 psig). A minimum pressure of 1105 kPa (160 psig) shall be maintained at the receiver.

(b) Components. The system shall be provided with one or more boosters with provisions for automatic operation. Multiple booster systems will not be duplexed but shall have provision for automatic simultaneous operation. The booster devices shall not contribute lubrication material to the SHDA.

(c) Demand. The network demand shall be according to the number of oral surgery DTRs programmed per the following:

TABLE 9-5

SHDA UTILIZATION FACTORS

Number of OS DTRs	Network Demand L/s (CFM)
1-2	2.8 (6)
3-4	5.7 (12)
5 and over	8.5 (18)

The booster device(s) shall be of sufficient output capacity to provide full system recovery from minimum to maximum system pressure in 15 minutes or less.

9.3.3 Vacuum Systems.

9.3.3.1 Medical-Surgical Vacuum System (MV). The medical vacuum (MV) system shall be a centrally piped, dry vacuum system containing two or more continuous duty pumps with a central receiver. The system shall meet the requirements of NFPA 99 (reference j) and shall be sized so that if one pump fails, the remaining pump(s) can supply 100% of the total system demand. The system design shall include automatic operation of the vacuum pumps including alternating lead/lag status. Provide an alarm to indicate vacuum pump failure.

(a) Applications. The MV shall be used only for medical functions involving patient care and therapy. A small laboratory in patient care areas used in direct support of patient therapy may be served by the MV. The typical analysis, research or teaching laboratory programmed for a large facility may also be served by the MV. However, the connection to the system shall be at the receiver with a shutoff valve and trap with a drain valve. A laboratory not supporting patient therapy shall have a vacuum system separate from the MV.

(b) Demand. Vacuum system pumps and piping shall be sized in accordance with NFPA 99 (reference 9j) "Recommended Vacuum Source Sizing" and "Recommended Minimum Pipe Sizing." See dental DHV system in 9.3.3.2 for system's dental demands. Only corrosion-resistant metal piping is acceptable for MV systems.

(c) Performance. A minimum vacuum of 51 kPa (15 in-Hg) shall be maintained at the receiver. The operating range shall be 51 to 65 kPa (15 to 19 in-Hg). A minimum vacuum of 41 kPa (12 in-Hg) shall be maintained at the farthest inlet. System pressure drop shall be a maximum of 10 kPa (3 in-Hg) at the calculated demand flow rate. A flow rate of 1.4 L/s (3 scfm) per inlet, with no equipment attached, shall be measured while maintaining 41 kPa (12 in-Hg) vacuum at the farthest inlet. The 1.4 L/s (3 scfm) without equipment is equivalent to the recommended 0.7 L/s (1.5 scfm) with.

(d) Critical Component. Vacuum bottle slide brackets shall be provided for all medical vacuum inlets. Vacuum bottles shall be used at all vacuum inlets to prevent liquids and solids from entering the piping network. Vacuum bottles shall be provided with an overflow shut-off device to prevent carry over of fluids or solids into the piping system. Brackets shall be positioned to provide proper clearance for flow meters and adapters and to eliminate conflict with electrical receptacles.

(e) Exhaust. Vacuum shall be exhausted in accordance with NFPA 99 (reference j).

9.3.3.2 Dental High Vacuum Oral Evacuation System (DHV). A central DHV system may be supplied for areas in dental clinics where MV is required as specified in Appendix "A." This system is also a dry system with a central piped distribution system and receiver; No liquids or solids shall be transported in the distribution system. Individual separators shall be located in each applicable DTR. In dental clinics located in a hospital, the MV system shall be used in lieu of a DHV system. The system shall consist of two or more vacuum pumps and a central receiver. System shall be sized so that upon failure of one pump the remaining pump(s) maintain the minimum vacuum specified while providing 100% of the calculated demand. The system design shall include automatic operation of the vacuum pumps including alternating lead/lag status. Provide an alarm to indicate vacuum pump failure.

(a) Performance. A minimum vacuum of 65 kPa (19 in-Hg) shall be maintained at the receiver. System pressure drop shall be such that the most remote inlet will have a minimum vacuum of 41 kPa (12 in-Hg) under peak demand conditions.

(b) Demand. System demand shall be calculated based on 0.9 L/s (2 SCFM) for each DTR DHV inlet and with the following demand factors:

TABLE 9-6

DHV DEMAND FACTORS

No. of DTR DHV Inlets	Use Factor
1 - 6	1.0
7 - 10	0.8
Over 10	0.6

9.3.3.3 Oral Evacuation System (DLV). A central low vacuum, high volume oral evacuation system (DLV) shall be installed in dental clinics to provide scavenging, collection, and disposal of liquids, solids, and aerosols from dental procedures. This is a wet system with liquids and solids transported from the collection point to a separator tank. The system shall be sized so that when one vacuum pump fails, the remaining pump(s) shall provide the above vacuum pressure and fluid flow for 70% of the total facility DTR's simultaneously. The system design shall include automatic operation of the vacuum pumps including alternating lead/lag status. Provide an alarm to indicate vacuum pump failure.

(a) Components. The inlet normally is floor mounted in a utility center interfaced with the dental chair or wall mounted with a means of connection to clinical end items such as the high vacuum hose. The separator(s) shall receive all liquid, air, and solids upstream of vacuum pump(s). Liquids and solids will be discharged from the separator(s) to a floor sink connected to the sanitary waste. Local codes may require the use of an amalgam separator. Coordinate with the local regulatory agency when discharge is to a public sanitary system. For government operated systems, coordinate with the using Military Department. Discharge shall occur once during a 24-hour interval for a one-tank system, or when a high liquid level sensor activates for a two-tank system. Separator overflow protection shall be included to protect during periods of abnormal usage or when the automatic discharge malfunctions.

(b) Performance. The system operating range shall be 24 to 27 kPa (7 to 8 in-Hg). A minimum vacuum of 24 kPa (7 in-Hg) shall be maintained at the farthest inlet. System pressure drop shall be a maximum of 3 kPa (1 in-Hg) at the calculated demand flow rate, i.e. 27 kPa (8 in-Hg) at the nearest inlet. A flow rate of 7 L/s (15 scfm) per inlet shall be measured while maintaining 24 kPa (7 in-Hg) at the farthest inlet.

(c) Demand. The system demand shall be calculated based on 7 L/s (15 scfm) per inlet-nozzle orifice. To offset piping and component losses, increase the demand flow rate by the following:

TABLE 9-7

DEMAND FLOW RATE INCREASE

Number of Inlets	Increase (%)
1-20	10
21-40	15
41 and above	20

The demand usage factor is normally 100 percent. Verify the specific usage factor with the user and the Design Agent.

(d) Separator Tank. The separator/collector tanks shall be sized according to the following table:

TABLE 9-8

SEPARATOR TANK SIZING

	Separator Tanks	
Number of DTR's	Quantity	Minimum Size L (Gal)
1-6	1	76 (20)
7-10	1	152 (40)
11-20	1	304 (80)
21-30	2	152 (40)
31 and above	2	304 (80)

9.3.3.4 Central Dental High-Volume Laboratory Dust Evacuation (LDE) System. The LDE system shall scavenge and centrally separate, filter, and collect material trimmings, grinding debris (toxic and nontoxic), and particulates from polishing and finishing operations in the dental laboratory. Point of use dust collection may be provided for some operations per using Military Department requirements.

(a) Components. The LDE system for dental laboratories shall consist primarily of one belt-driven vacuum pump complete with a preset, field-adjustable ingestion valve, exhaust silencer, and a central cyclonic separator with a filter bag system.

(b) Performance. A vacuum of 10 kPa (3 in-Hg) shall be maintained at the separator. The vacuum at the farthest inlet shall be a minimum of 4.2 kPa (1.25 in-Hg). A flow rate of 28 L/s (60 scfm) per technician work station inlet and 71 L/s (150 scfm) per equipment item inlet shall be measured while maintaining the 10 kPa (3 in-Hg) at the separator. Verify the equipment requirements with the using Military Department.

(c) Demand. The system demand shall be calculated based on the inlet flow rate requirement. Apply the usage factor values shown in Table 9-9 for the given number of inlets. The filter sizing shall also be based on the given number of inlets.

TABLE 9-9

LDE SYSTEM UTILIZATION FACTORS

Lab Size (# of inlets)	Usage Factor (Percent)	Separator Filter m^2 (Sq. Ft.)
1 to 4	100	5.6 (60)
5 to 10	80	11.2 (120)
11 to 15	70	14.9 (160)
16 to 24	60	20.5 (220)

9.3.3.5 Waste Anesthesia Gas Disposal (WAGD). A separate vacuum system, designed in accordance with NFPA 99 (reference j) shall be provided for the disposal of waste anesthesia gases. The WAGD system shall be installed in anesthesia locations to provide scavenging, collection, and disposal of waste anesthesia gas. It shall be a centrally piped, dry vacuum system containing two or more continuous duty pumps with a central receiver. The system shall meet the requirements of NFPA 99 and shall be sized so that if one pump fails, the remaining pump (or pumps) can supply 100% of the total system demand. The system design shall include automatic operation of the vacuum pumps including alternating lead/lag status. Provide an alarm to indicate vacuum pump failure.

(a) Alternative WAGD System. A dedicated exhaust system can be provided as a means of WAGD. Refer to the HVAC Section for further design guidance.

9.3.4 Piped Medical Gases.

9.3.4.1 Oxygen (OX). Oxygen (OX) is used in the gaseous state to sustain life through direct delivery to the patient. Oxygen can be stored as a gas in cylinders or as a liquid in bulk tanks. It is classified as a nonflammable gas; however it can increase the range of flammability of other materials and gases when present in sufficient concentration. Its storage requires proper construction and ventilation. See 9.3.1 for further design guidance. The oxygen central supply and storage system shall conform to NFPA 99 and NFPA 50 (reference 9j and 9l). Oxygen shall be supplied at a minimum of 345 kPa (50 psig) at all outlets with a tolerance of +35 kPa (5 psig). The oxygen system shall not be used to supply non-patient uses such as equipment in laboratories or maintenance for medical equipment. Point-of-use service shall be provided for non-patient uses.

(a) Emergency Connection. Provide an emergency oxygen supply connection on the building exterior when the oxygen supply system is located outside of the building. This connection shall be used for a temporary auxiliary source of supply. Valving and pressure control devices shall be in accordance with NFPA 99 (reference j).

(b) Demand. The system shall be designed for a demand of 20 L/m (0.7 cfm) per outlet. A usage factor of 100% shall be used for all critical care areas. For other areas use the following factors:

TABLE 9-10

OXYGEN SYSTEM UTILIZATION FACTORS

Number of Outlets	Percent Usage
1-3	100%
4-12	75%
13-20	50%
21-40	31%
41 or more	25%

c) Alternative Sizing Method. Manifold and bulk oxygen supply systems shall be sized based upon historical or projected consumption rates. When these rates cannot be determined, the criteria in Table 9-11 shall be used as an estimate for sizing systems. This method does not take into account dental requirements nor outpatient clinic and diagnostic and testing usage. The method selected shall be coordinated with the Design Agent.

TABLE 9-11

CYLINDER MANIFOLD SYSTEMS

Number of Beds	Minimum Number of Cylinders [1]
1-50	8
51-75	12
76-100	16
101-125	20
126-150	24
Over 150	Requires special study [2]

[1] Per bank of "H" cylinders.
[2] The special study shall include an analysis of an appropriate diversity factor and the cost effective option between cylinder and bulk storage.

(d) Delivery Monitoring. The central oxygen system design shall also be in accordance with DoD Directive 6055.10 (reference 9o). It specifies provisions for monitoring oxygen purity. This includes access to the system for drawing test samples and procedures for monitoring the purity of oxygen deliveries.

9.3.4.2 Nitrous Oxide (NO). Nitrous oxide is an anesthetic gas capable of inducing the first and second stages of anesthesia when inhaled. It is classified as a nonflammable gas; however, it can increase the range of flammability of other materials and gases when present in sufficient concentration. Its storage requires proper construction and ventilation. See 9.3.1 for further design guidance. Nitrous oxide manifolds shall not be located outside in cold climates due to the low vapor pressure of nitrous oxide at low temperatures. Nitrous oxide shall be supplied at a minimum of 345 kPa (50 psig) at all outlets with a tolerance of +35 kPa (5 psig).

(a) Demand. The system shall be designed for a demand of 20 L/m (0.7 cfm) per outlet with the following usage factors (reference 9p):

TABLE 9-12

NITROUS OXIDE SYSTEM UTILIZATION FACTORS

Number of Outlets	Percent
1-3	100%
4-12	75%
13-20	50%
21-40	31%
41 or more	25%

(b) Alternative Sizing Method. Table 9-13 provides the data necessary for a sizing methodology based on the number of beds instead of per outlet. This method is not recommended if there are a number of nitrous oxide outlets for clinical, including dental, and diagnostic and testing functions. The method selected shall be coordinated with the Design Agent.

TABLE 9-13
NITROUS OXIDE SYSTEM MANIFOLD SIZING

Beds	Number of cylinders/bank [1]
50-100	2 expandable to 4
100-250	4 expandable to 6
250-500	6 expandable to 8
500 or More	Special Study [2]

[1] Based on "G" cylinders and one complete change each week.
[2] The special study shall include an analysis of an appropriate diversity factor and the cost effective option between cylinder and bulk storage.

9.3.4.3 Nitrogen (NI). Nitrogen is an inert gas primarily used as an operating or driving means for medical and dental handpieces and equipment and as an inert gas environment for laboratory functions. The tool driving application requires relatively high pressures which must be incorporated into the storage and distribution system design. See 9.3.1 for further design guidance. The cylinder manifold system shall be designed and installed in accordance with NFPA 99 (reference 9j). Where a Dental Clinic is integral to a facility with a central nitrogen system, the system may be extended to operate dental surgical handpieces. Nitrogen shall be supplied at a minimum of 1105 kPa (160 psig) at all outlets with a tolerance of +138 kPa (20 psig).

(a) Control Cabinet. Each individual nitrogen use location (e.g., individual operating room, dental treatment rooms) shall be provided with a nitrogen control cabinet with pressure gauges and pressure regulating valves for the purpose of independently regulating pressures at each usage location.

(b) Demand. The system demand shall be calculated based on 7 L/s (15 cfm) per outlet. The demand usage factor is normally 100 percent. The type of handpiece or equipment item and their flow rate and pressure requirements shall be factored into the sizing calculations. Nitrogen applications and usage rates shall be coordinated with the using Military Department and the Design Agent.

(c) Alternative Sizing Method. Table 9-14 (reference 9p) provides the data necessary for a sizing methodology based on usage areas or locations instead of per outlet. This method is not recommended if there are a number of relatively minor nitrogen usages for clinical, diagnostic and testing, and laboratory functions. The method selected shall be coordinated with the Design Agent.

TABLE 9-14

MANIFOLD SIZING FOR NITROGEN SYSTEM

Number of Using Locations	Cylinders per bank *
1-4	2
5-8	3
9-12	4
13-16	5
17-20	6
21-24	7
25-28	8

* Assumes "H" cylinders and one complete change each week.

9.3.4.4 Supply Systems. The supply or source for a medical gas can be a cylinder or bulk system. The cylinder system shall have two banks that alternately supply the piping system. Refer to the cylinder system sizing Tables in this Section for guidance on the number of cylinders per bank. The cylinder system may or may not have a reserve supply which shall consist of three or more cylinders. A bulk system shall have a minimum of two sources. One shall be the main or primary source and the other the secondary. The main source can be an alternating type with multiple tanks alternately supplying the piping system.

9.3.5 Sterilization Gas. Gas/vapor sterilization may be used for treating contaminated medical equipment and implements and certain infectious waste. In this method, the sterilizing agent is a gaseous or vaporized chemical. The two most commonly used chemicals are ethylene oxide (ETO) and formaldehyde which may be human carcinogens.

9.3.5.1 Ethylene Oxide. All precautions in the use of ETO as outlined by OSHA (reference 9q) and NIOSH CIB 52 (reference 9r) shall be strictly followed. ETO is regarded as a potential occupational carcinogen.

(a) Layout. Where ETO is planned in a facility, a separate room for sterilizer, ETO supply cylinder, and associated piping shall be provided. Access to this equipment and storage room shall be from the Central Material Service work area only. The front of the sterilizer shall be accessed from the loading room.

(b) Components. The cylinder supply line shall have a three-way valve to permit exhausting of residual ETO vapors prior to changing the tanks. The supply, tank and vent valves shall be labeled.

(c) Ventilation. Ventilation shall also be provided for the waste gases from the sterilizer evacuation line and the drain air gap. See the HVAC Section for exhaust system design guidance.

(d) Emission Control. Some states have adopted legislation that prohibits the release of ETO sterilizer exhaust gas to the atmosphere. Presently the only available ETO emission control technology is based on a chemical conversion or scrubber. The design shall incorporate the necessary provisions to comply with both federal and state legislation. Local requirements shall be coordinated with the using Military Department and Design Agent.

9.3.6 Process Gas. Process gas is natural or propane that is used as a point-of-use heat or flame source. The process is typically found in laboratories and sometimes in other areas such as equipment repair and DTR's to support medical or dental functions. The gas system design shall be in accordance with NFPA 54 and 58 (references 9h and 9n).

(a) Load. The load is the sum of the consumption rates for the given apparatus or equipment to be serviced. Laboratory burners are typically sized at 1465 W (5,000 Btuh) for small burners and 3075 W (10,500 Btuh) for large burners. For other equipment such as casting ovens, use manufacturers data.

(b) Demand based on the number of outlets is given Table 9-15.

TABLE 9-15

PROCESS GAS UTILIZATION FACTORS

Number of Outlets	Percent Usage (%)
1 - 8	100
9 - 16	90
17 - 29	80
30 - 79	60
80 - 162	50
163 - 325	40
326 - 742	35
743 - 1570	30
1571 - 2900	25
>2900	20

REFERENCES

9a. National Standard Plumbing Code, National Association of Plumbing - Heating - Cooling Contractors.

9b. National Association of Corrosion Engineers (NACE), "Book of Standards and Their Applicable Recommended Practices."

9c. ASTM D 1193, Reagent Water.

9d. Federal Specification WW-P-541 Series for Plumbing Fixtures and Appurtenances, e.g. "Lavatories" - WW-P-541/4B and "Plumbing Fixtures, Vitreous China" - WW-P-541/1B, 2B.

9e. American National Standards Institute, Series A112 and Z124, e.g. "Supports for Off-the-Floor Plumbing Fixtures for Public Use" - A112.6.1 and "Plastic Shower Receptors and Shower Stalls" - Z124.2.

9f. MIL-STD-1691, "Construction and Material Schedule for Military Medical and Dental Facilities."

9g. Air Conditioning and Refrigeration Institute (ARI) Standard 1010, "Drinking-Fountains and Self-Contained, Mechanically -Refrigerated Drinking-Water Coolers".

9h. NFPA 54, "National Fuel Gas Code"

9i. NFPA 58, "Storage and Handling of Liquefied Petroleum Gases."

9j. NFPA 99, "Health Care Facilities."

9k. Compressed Gas Association (CGA) Pamphlet C-9, "Standard Color-Marking of Compressed Gas Cylinders Intended for Medical Use in the United States."

9l. NFPA 50, "Bulk Oxygen Systems."

9m. NFPA 70, "National Electrical Code."

9n. Compressed Gas Association Pamphlet No. P-2.1.

9o. DOD Directive 6055.10, "Storage and Administration of Oxygen for Medical Use."

9p. American Society of Plumbing Engineers, Data Book, Volume 2, Special Plumbing Systems Design, Chapter 10.

9q. Occupational Safety and Health Administration of the U.S. Department of Labor, 29 CFR 1910.1047(a), "Ethylene Oxide."

9r. National Institute for Occupational Safety and Health, Current Intelligence Bulletin 52, "Ethylene Oxide Sterilizers in Health Care Facilities."

SECTION 10: ELECTRICAL

10.1 General. This section provides guidance for planning, design and construction of electrical and illumination systems. Refer to MIL-HDBK-1190 (reference 10a) for general electrical requirements.

10.1.1 Criteria. The criteria, standards and codes referenced in this section are the minimums acceptable for efficiency, economy, durability, maintainability, flexibility and reliability under normal and emergency conditions. Refer to NFPA 70 and 99 (references 10b and 10c) for provision, installation, performance, maintenance and testing requirements.

10.1.2 Definitions. NFPA 70 and 99 (references 10b and 10c) define and discuss locations and electrical requirements for "General Care" areas, "Critical Care" areas and "Wet Locations."

10.1.2.1 The following areas are to be treated as "Critical Care" Areas:

a. Operating rooms.
b. Delivery rooms.
c. Cystoscope rooms.
d. Oral and Maxillofacial surgery located in Hospitals.
e. Recovery (hospital surgery, and labor recovery beds).
f. Coronary care units (patient bedrooms).
g. Intensive care unit (patient bedrooms).
h. Emergency care units (treatment/trauma rooms and cubicals).
i. Labor rooms (including stress test and preparation).
j. Intensive care nursery.
k. Cardiac catherization.
l. Angiographic exposure room.
m. Hemodialysis (patient station).
n. Surgery suite preparation and hold.
o. Hyperbaric chamber.
p. Hypobaric chamber.
q. Radiation Therapy (including simulator room).
r. Nuclear medicine (camera room).

10.1.2.2 General Care Areas. All other patient care areas will be treated as "General Care."

10.1.2.3 Wet Locations. Refer to NFPA 99 (reference 10c) for definition of Wet Locations. Operating rooms, delivery rooms, cystoscope rooms, oral surgery, and cardiac catherization rooms are not considered wet areas.

10.2 Exterior Electrical. Exterior electrical systems shall conform to ANSI C2 (reference 10d) "National Electrical Safety Code." For electrical service feeder design criteria, see NFPA 70 and 99 (reference 10b and 10c).

10.3 Electrical Service. Service feeders will be installed underground within the facility site.

10.3.1 Hospitals. As recommended by NFPA 99 (reference 10c), hospitals should be served by two primary service feeders each able to carry the full hospital demand plus 20 percent spare load growth capacity. Service feeders will be connected to different power sources, if

available, and to two differently routed distribution system feeders. Where two power sources are not available, the service feeders may be connected to two different sections of a loop system. Double-ended substation distribution systems should be designed for hospital inpatient and critical loads. Other hospital loads may be served by single-ended substations (refer to Figure 10-1). Each transformer in the double-ended substation will be sized to serve approximately 60-70 percent of the substation demand load.

10.3.2 Clinics and Ambulatory Care Facilities. Clinics, ambulatory care and other facilities should be provided with one primary service and a single-ended substation.

10.3.3 System Protection. System protection will be selective. Manually operated primary selector switch and fused load break disconnect switch may be provided for each transformer as indicated in Figure 10-1. Transformers will normally be located outside the facility but may be located within the building where practicable and economical. Transient protection resulting from switching, lightning and etc. for these systems will be provided as an integral part of the equipment.

10.4 Alternate Power Source. Consideration will be given to the location of space for components of the essential electrical system in order to limit interruptions caused by localized national conditions, i.e. floods, earthquakes, etc.

10.4.1 References. The alternate electrical source will conform to NFPA 37, 70, 99, and 110 (references 10e, 10b, 10c, 10f) as a separate derived power source.

10.4.2 Hospital. The alternate power source will consist of two or more engine generator sets designed to provide electrical power for hospital essential electrical systems (Figure 10-1 and Appendix "A") during an interruption of the normal power supply, as required by NFPA 70 and 99 (references 10b and 10c). The generator sets will be of equal capacity and ratings with matched impedance and loss characteristics and designed to carry, in parallel, the maximum demand load of the essential electrical system. Motor starting and X-ray unit momentary kva loads will be evaluated when sizing engine generator sets. Parallel operation of the generator sets will be as indicated by figure 10-1. Automatic load shedding with manual override controls and/or shifting capability will be incorporated in-the-event that one generator fails.

10.4.3 Medical and/or Dental Clinic. Clinics will not be provided with an engine-generated set unless authorized by DMFO. When authorized, clinics will be provided with a one engine driven generator set. Justification will be provided to DMFO for authorization to incorporate an engine-generator set in a clinic. This justification will address mission contingency requirements, local power reliability, and safety for human life. If approved by DMFO, alternate power source will be provided in clinics as required by NFPA 99 (reference 10c) and installed in accordance with NFPA 70 (reference 10b).

10.4.4 Engine Generator Sets. Engine generator sets will be powered with diesel or may be dual fuel fired with diesel being one of the fuels. The preferred generating voltages is the highest utilization voltage proposed for the facility (normally 480Y/277 volt, 3-phase, 4-wire system is the highest utilization voltage). The sets will conform to NFPA 37, 70, 99 and 110 (references 10e, 10b, 10c, and 10f). The sets will include automatic start-and-stop equipment, solid state battery chargers, fuel storage tanks conforming with NFPA 30 (reference 10g) audible and visual

warning device to alert of less than 3 hours fuel supply, and day tanks and radiators as required. Engines will have a residential type exhaust silencer and will start and assume full electrical loads within 10 seconds from the interruption of the normal electrical power source.

10.4.5 Location of Engine-Generator Sets. Generator sets normally will be located in or adjacent to the central energy plant serving the facility, provided that the cable runs resulting from this location can be cost justified and result in line voltage drop losses in compliance with the referenced codes. When the central energy plant is remote from the facility, generators will be installed in a generator building located adjacent to or within the facility at ground level, whichever is more economical. The generator and emergency switch gear rooms will be located at or near the building exterior to facilitate initial installation and removal and replacement of defective equipment. The generator sets and auxiliaries will be arranged and located so minimum facility modifications will be required for future installation of an additional generator set and auxiliaries or replacement of existing units. Per NFPA 99 (reference 10c) service-entrance transformers and other equipment that is not part of the emergency system will not be installed in the same area (room) as the engine-generator sets.

10.4.6 Manual Test Switches. Manual test switches will be provided for each automatic transfer switch of the essential electrical system.

10.4.7 Automatic Transfer Switches (ATS). All ATSs will be double-throw with draw-out construction. Contacts will have viewing ports for ease of contact inspection. Circuit breaker type transfer switches are not acceptable. Each ATS will have indicator lights to identify Normal Power and Emergency Power. All ATSs will be equipped with a load break by-pass isolation switch. ATSs feeding motors should be provided with an in-phase monitor to prevent an out-of-phase transfer. The ATSs serving critical loads will validate the presence of reliable normal power before retransfer.

10.4.8 Ground Fault Protection Equipment. The essential electrical system will not be provided with ground fault protection of the equipment. The generator circuit breaker and essential electrical main distribution board circuit breaker will be provided with ground fault detection features, when required, to indicate a ground fault and sound an audible alarm but not trip the breaker.

10.4.9 Remote Alarm Annunciator. A remote alarm annunciator will be provided as required by NFPA 99 (reference 10c).

10.4.10. Fuel Storage Tanks. The fuel storage tanks and installations in facilities will comply with NFPA 30 (reference 10g) and Local, State, and Federal Environmental Protection Agency requirements. The capacity of the fuel oil tank will be sized to the nearest standard size per NFPA 110 (reference 10f) requirements but will never be less than a 4-day supply. A larger or smaller tank may be supplied as the local fuel supply conditions permit. Separate day tanks will be provided for each engine generator set and will be sized as follows:

50 kW to 100 kW generator : 100 L (25 gal) min. - 200 L (50 gal) max.
101 kW to 200 kW generator: 200 L (50 gal) min. - 300 L (75 gal) max.
201 kW to 300 kW generator: 300 L (75 gal) min. - 400 L (100 gal) max.
Over 300 kW generator : 400 L (100 gal) min.- 1000 L (250 gal) max.

A set of duplex transfer pumps will be provided for each fuel storage tank. Each pump will be sized to accommodate all generators including future set.

10.4.11 Loads on the Alternate Source. The alternate power source will have sufficient capacity to supply the demand load of the essential electrical system of the facility as outlined in NFPA 99 (references 10c), as modified herein, and as required by items listed in Appendix A. Care should be taken in not supplying only critical branch circuits to any critical area. The failure of a critical branch component between the area and the transfer switch could render the entire section without power. Supplying a mixture of normal, critical, and even equipment branch power to critical areas may be more prudent, see NFPA 99 (reference 10c). Additional loads may be added to the critical branch or equipment system by the using Military Department as needed for effective hospital operation. See Sections 8, 11, 13, and 14 for additional requirements.

10.5 Interior Electrical Systems. Interior Electrical Systems shall meet to NFPA 70 and 99 (references 10b and 10c) and the special requirements of the using agency.

10.5.1 Interior Distribution. Interior lighting and power loads will be served at the highest voltage practicable. Fluorescent and high intensity discharge (HID) lighting systems and building power loads will be supplied by a 480Y/277 volt system. Dry-type transformers will be utilized to furnish 208Y/120 volt power for incandescent lighting, receptacle, and small equipment loads. A 208Y/120 volt system will be provided where the use of higher voltage is not cost effective. Main distribution switchgear and switchboards will be the draw-out, adjustable solid state trip circuit breaker. Panelboards for branch circuits will be of the circuit breaker type. Ground fault protection will be provided in accordance with NFPA 70 and 99 (references 10b and 10c). All protective devices will be coordinated for selective overload, short-circuit, and ground fault protection. Ground fault protection of the essential electrical system will be as described above. See Section 19 for additional IBS distribution requirements.

10.5.2 Power Conditioning. Specific power conditioning equipment will normally be installed as part of the equipment that needs special power. Contractor-furnished, contractor-installed systems that utilize solid state devices will be provided with transient protection. Static uninterruptible power system (UPS) will normally be provided with the equipment and system being served. However, requirement or provisions for a UPS will be determined on a project-by-project basis. Provisions for future installed power conditioning equipment will be determined on a project-by-project basis.

10.5.4 Location and Space Requirements. Electrical equipment rooms will be located at or near the building exterior to facilitate initial installation of large equipment, and removal and replacement of defective equipment. Adequate space will be provided for maintenance of electrical equipment and equipment removal. Pipes and other equipment foreign to the electrical equipment will not be located in, enter, or pass through such spaces or rooms. Where practicable in finished areas of hospitals, panelboards, signal and communication cabinets will be grouped, surface-mounted, in separate electrical and communication ventilated wiring closets. Joint use closets will not be provided. Closets in which dry-type transformers are installed, should be located away from noise sensitive areas and provided with adequate ventilation to maintain an ambient temperature not to exceed 86 degrees F. For facilities with more than three floors, electrical and communication closets should be stacked

vertically whenever practicable. See Sections 10 and 19 for additional requirements. Panelboards in critical care areas will be located in the vicinity of their loads, and will be accessible to the operating staff. See Sections 13 and 19 for additional distribution, firestopping and location requirements for IBS distribution zones.

10.5.5 Wiring. All power wiring will be insulated copper. A green insulated copper ground conductor will be run with all branch circuits.

10.5.6 Branch Circuits. Circuits serving patient care areas shall comply with NFPA 70 and 99 (references 10b and 10c).

10.5.7 Radiology Provisions. Refer to Universal X-Ray Room Criteria In Section 16 and Appendix C.

10.5.8 Receptacles. Receptacles shall be provided as follows:

10.5.8.1 Critical Care Areas. Provide receptacles in areas defined herein as critical care as required by NFPA 70 (reference 10b) and NFPA 99 (reference 10c).

10.5.8.2 Hospital Grade Receptacle. Hospital grade receptacles will only be provided for areas as required by NFPA 70 (reference 10b).

10.5.8.3 Safety Receptacles. Tamperproof safety receptacles will be provided in all medical areas occupied by unattended children, including playrooms, baths, toilets, pediatric waiting and pediatric bedrooms. Safety receptacles will be provided in psychiatric seclusion rooms and other areas as required by NFPA 70. Hospital grade safety receptacles will be provided in areas which require both features.

10.5.8.4 Maintenance Receptacles. Maintenance receptacles will be provided in corridors, at equipment locations on roof, at exterior equipment locations, in underfloor crawl spaces, and around the exterior perimeter of building.

10.5.8.5 Receptacle Identification. Receptacles connected to the emergency system will be identified as required by NFPA 70 and 99 (reference 10b and 10c).

10.5.8.6 Ground Fault Circuit Interrupters (GFCI). GFCI receptacles will be provided only at locations required by NFPA 70 and 99 (reference 10b and 10c). GFCI shall be provided in patient bedroom toilets.

10.5.8.7 Patient Care Area Grounding. General care areas and critical care areas, including all anesthetizing locations, will be provided with a equipotential grounding system as required by NFPA 70 and 99 (references 10b and 10c).

10.5.8.8 Inhalation Anesthetizing Locations. All inhalation anesthetizing locations will be classified and designed as nonflammable. Refer to using Military Department criteria for identifying anesthetizing locations. Operating Rooms, Delivery Rooms, Oral Surgery, Cardiac Catheterization, and other Special Procedure Rooms as may be defined by using Military Department are considered anesthetizing locations. Isolated power systems are not required in nonflammable anesthetizing locations and will not be provided.

10.5.8.9 Flammable Anesthetizing Locations. Flammable anesthetics are not used in facilities.

10.6 Lighting.

10.6.1 Design Criteria. Lighting design will conform to the requirements of this handbook and Appendix A. The lighting design levels shall be within plus 10 percent for 500 Lux (50 fc) and over, and plus 50 Lux (5 fc) for lower levels. Emergency egress and exit lighting will conform to the requirements of NFPA 101 (reference 10h). Lighting design and switching will incorporate energy efficient features whenever practicable and be consistent with lighting criteria and the functional or operational intent of the facility. Fluorescent lighting will be provided to the maximum amount practicable. Incandescent lighting will not be used except where required for medical functional reasons. Exterior lighting will normally be high pressure sodium, metal halide, or fluorescent (with cold weather ballast) types. Recessed fluorescent fixtures will be provided in rooms with lay-in acoustical tile ceilings. Fluorescent fixtures may be recessed or surface mounted in rooms with gypsum board ceilings. Industrial-type or open-strip-type fluorescent fixtures will generally be used in rooms with unfinished ceilings. Fixtures in large Storage and Supply rooms will be mounted to readily permit relocation within several feet. Fluorescent lamps will be normally 34/40 watt energy saving. Refer to Section 7 for energy conscious design considerations.

10.6.2 Battery Operated Lights. Fifteen to 25 percent of the lighting in operating rooms, obstetrical delivery rooms, emergency treatment rooms, cystoscopy, cardiac catheterization rooms, and any rooms with invasive procedures will be provided with battery backup for general illumination which will operate without interruption during periods of normal and emergency power lapse. Additional battery operated light backup may be installed for surgical lights in the above mentioned rooms. Fifteen percent of lighting in Nurseries and 25% in the NICU nursery should be provided with battery backup. Batteries will have the capacity for 1/2 hour illumination. A minimum of one battery powered light will be provided in each generator set location, the emergency switchboard location, the switchgear room, and central communications room(s).

10.6.3 Patient Bedrooms. Provide general illumination and reading lighting controlled by the patient. Provide examination lighting, as stipulated by the using Military Department, controlled at the bed location. Provide night lighting controlled at the corridor door.

10.6.4 Other Rooms. Refer to Appendix A. Corridor lights adjacent to intensive care bedrooms will be one-third increment switch controlled. In recovery rooms, coronary, and intensive care units, acute care step-down bedrooms, X-ray therapy rooms, and where patients will be confined to a bed for extended periods, low-brightness lighting will be provided. Provide examination lighting controlled at bed location in Intensive Care Units, Isolation Rooms, Labor Rooms, Acute Care Step-down Rooms, and Recovery Rooms. Fixtures in Seclusion Rooms will be recessed type, of tamperproof construction with impact-resisting tempered lenses. Seclusion Rooms will be provided with night lights. Darkrooms will be provided with an incandescent photographic safelight in addition to the normal white light for general room illumination. This safelight will normally be considered an item of medical equipment. Provide a "Darkroom In Use" light (sign), located outside and above the Darkroom door and control with the safelight switch in the darkroom. This "Darkroom In Use" light is not required in light-tight type doors. For Darkrooms with film loading bins, bin drawers will be interlocked with Darkroom white light and safelight so that when a bin drawer is opened, white light is extinguished and safelight remains lit. Refer to Appendices A and B for Radiographic Room requirements.

10.6.5 Exterior Signage. Exterior signage for Emergency will be internally illuminated. Signage location will be coordinated with illumination of access roads, parking areas, and building entrances to minimize requirements for additional illumination of signage.

10.6.6 Parking Areas and Walkways. Site areas intended for night use will be illuminated by an average of 5 Lux (0.5 footcandles). See Section 14.

10.6.7 Helipad Lighting. Lighting and marking for the helipad shall be in accordance with Military Department requirements for rotating beacon, perimeter, and landing direction lights, pad inset lights and flood lights. Lighting shall be connected to the essential power system.

10.6.8 Dimming. Dimming will be provided as noted in Appendix A.

10.6.9 Maintenance Area Lighting. Interior utility tunnels and walk-in pipe chases will be lighted by one footcandle of incident light for the safety of maintenance personnel. Switches will be equipped with pilot lights. Receptacles for temporary work lights will be located at reasonable intervals. See Section 17.

10.7 Lightning Protection. Facility lightning protection requirements will be assessed per NFPA 780 (reference 10i). Where lightning protection is required; it will be a UL Master Labeled System.

10.8 Seismic Consideratons. See Section 6.

REFERENCES:

10a. MIL-HDBK-1190, "Facility Planning and Design Guide."

10b. NFPA-70, "National Electrical Code."

10c. NFPA-99, "Standard for Health Care Facilities".

10d. ANSI-C2, "National Electrical Safety Code."

10e. NFPA-37, "Standard for the Installation of Combustion Engines and Gas Turbines."

10f. NFPA-110, "Emergency and Standby Power Systems."

10g. NFPA-30, "Flammable and Combustible Liquids Codes."

10h. NFPA-101, "Life Safety Code."

10i. NFPA-780, "Lightning Protection Code."

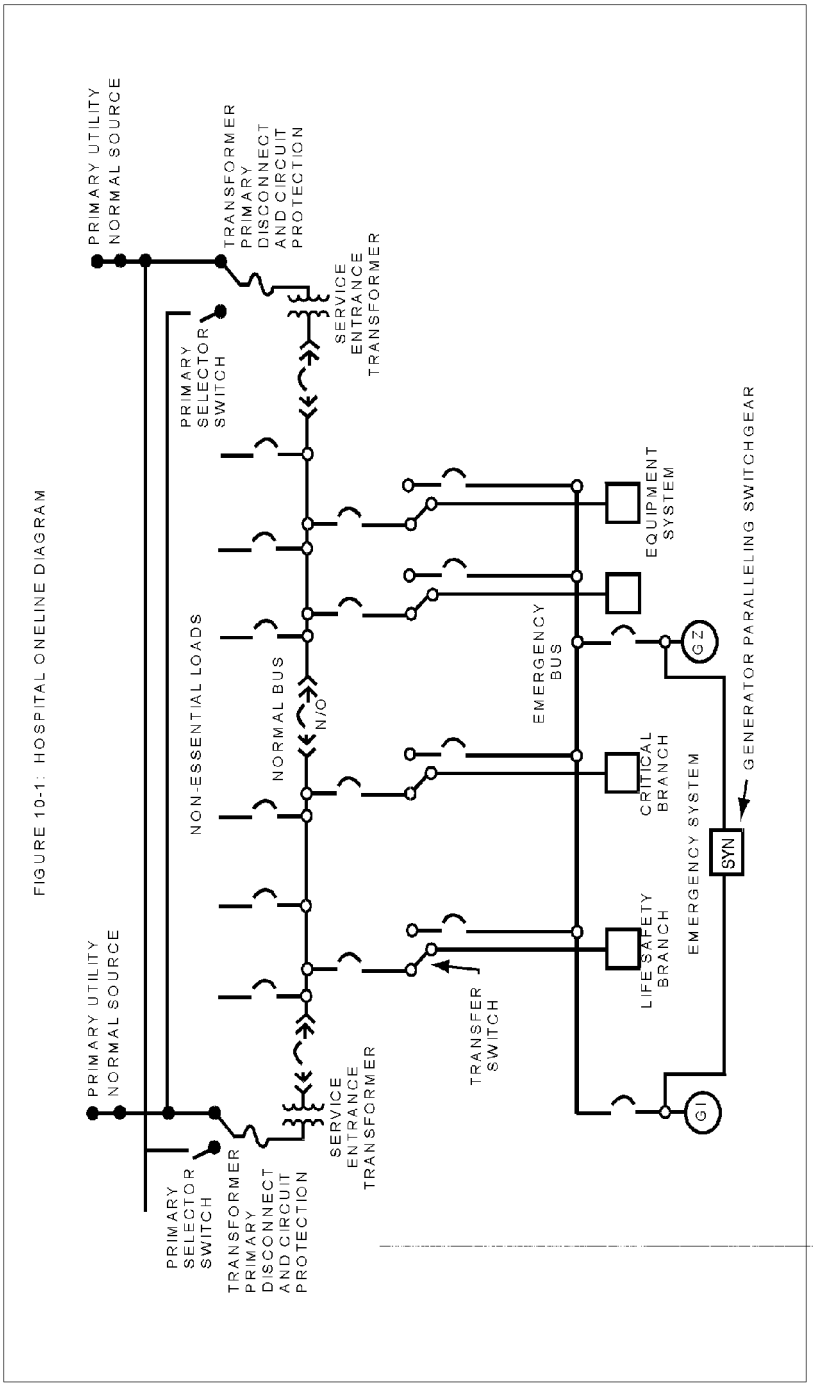
FIGURE 10-1: HOSPITAL ONELINE DIAGRAM
PRIMARY UTILITY NORMAL SOURCE
PRIMARY UTILITY NORMAL SOURCE
TRANSFORMER PRIMARY DISCONNECT AND CIRCUIT PROTECTION
TRANSFORMER PRIMARY DISCONNECT AND CIRCUIT PROTECTION
PRIMARY SELECTOR SWITCH
PRIMARY SELECTOR SWITCH
SERVICE ENTRANCE TRANSFORMER
SERVICE ENTRANCE TRANSFORMER
NON-ESSENTIAL LOADS
NORMAL BUS
N/O
EMERGENCY BUS
EQUIPMENT SYSTEM
CRITICAL BRANCH
LIFE SAFETY BRANCH
EMERGENCY SYSTEM
TRANSFER SWITCH
GENERATOR PARALLELING SWITCHGEAR
SYN
G1
G2

FIGURE 10-1

SECTION 11: COMMUNICATIONS, INFORMATION, AND SIGNAL SYSTEMS

11.1 General. This section provides general guidance on providing communications, information systems, and signal systems design.

11.1.1 For purposes of this section, the term "telephone system" applies to that internal and external communication system which is not necessarily peculiar to facilities and will include all telephone switches, instruments, cabling, conduits, and other equipment as necessary to provide a complete and operable telephone system.

11.1.2 The system(s) description, features, and needs discussed in this section are developed for facilities throughout DoD. The A-E should use this information as a starting place--expanding every system as needed to the fullest extent--thus providing a complete Information Systems package which meets current demands and has expansion potential to meet future needs.

11.2 Communication Distribution Facilities. Communication systems, equipment, and associated facilities will be designed in conformance with provisions of applicable using Military Department criteria, ANSI Y32.2 (reference 11a), ANSI C2 (reference 11b), NFPA 70 (reference 11c), NFPA 99 (reference 11d), NFPA 101 (reference 11e), MIL-STD-188/124 (reference 11f), MIL-HDBK-419 (reference 11g), ANSI/IEEE Standard 602 (reference 11h), MIL-HNBK-1008 (reference 11i) and EIA/TIA 568A / 569 / 606 and 607 (references 11j, 11k, 11l, and 11m). See Section 12 for accessibility requirements.

11.2.1 Exterior.

11.2.1.1 Design of the exterior cable system will be based on the existing installation cable network and the requirement(s) of the project. All exterior cable will be installed underground to the extent feasible. The primary route from the new facilities to the installation network will be a concrete encased ductbank to the nearest manhole. This ductbank will support cables for Telephone, Medical Information System, Cable Television (CATV), Energy Monitoring and Control System (EMCS), and any other communications systems required for the project.

11.2.1.2 In those cases where there is an aerial service connection point, underground conduits shall be installed from the new facility to the nearest service pole.

11.2.1.3 Conduits in ductbank will provide for current needs and for future expansion. Design will be coordinated with the forecasts for Electronic Private Automatic Branch Exchange (EPABX) line and trunk load and all other cable systems using the ductbank. Design of ductbank and manholes shall be based on using Military Department requirements.

11.2.1.4 Where long runs of cable are required to connect to the nearest point of service or where a large cable pair count is required from the new facility to the Installation Dial Central Office (DCO), fiber optic cable or screened cable to provide digital T-1 circuits may be used as required by using Military Department.

11.2.2 Interior.

11.2.2.1 Cable trays Provide cable trays above suspended ceilings in corridors for all communications systems cables. Cable trays shall be located just above the ceiling and shall be designed and installed to ensure ease of accessibility for future wiring changes. Primary

distribution cable trays in a facility with an Integrated Building Systems (IBS) walk on deck will be located in the distribution zone, see Section 19. A conduit will be provided from each communication system outlet to the cable tray. A pc based cable management system, meeting EIA/TIA 606 (reference 11l) requirement, should be considered for inclusion with the construction contract for facilities with a high density of copper and fiber cables, eg, hospitals and medical centers.

11.2.2.2 Communications Rooms and Closets. Communications rooms and electrical closets will be sized to accommodate telephone distribution terminal boards and the equipment panels of other communications systems. Provide utility and maintenance outlets on a dedicated circuit of the equipment branch of the emergency power system. Temperature and humidity conditioning will be provided to maintain the rooms at 78 degrees F (maximum) and 30 to 60 percent relative humidity, non condensing. Ensure that alternating current (AC) power from the appropriate emergency power branch is provided for each communication system. Space for those functional areas will be taken from the mechanical equipment space in the Program for Design (PFD).

11.2.2.3 Communications Head-End Equipment Room. Provide a separate Communications Equipment Room with sufficient space for personnel circulation and equipment maintenance for head-end equipment such as television, public address and program distribution, radio, and data communications equipment. This room may be located adjacent to the EPABX room, the Computer Room, or in the Mechanical areas. The head-end room should not be incorporated with the EPABX for security reasons. Circuit breaker panels fed from the appropriate emergency system branches as described in Section 10 shall be installed in the room to serve the head-end equipment. Design of the room will include temperature and humidity control to ensure that a temperature of 78 degrees F (maximum) can be maintained at a relative humidity of 30 to 60 percent noncondensing.

11.2.2.4 Central Communication Room. A Central Communication Room will be located as directed by the using Military Department and sized in accordance with the Program for Design (PFD). The Central Communication Room size will be based on the quantity of wall mounted graphic displays, annunciator displays, and other monitor and control equipment. Install monitors, annunciators, and control equipment in the room for the following systems as required:

a) Energy and Utility Monitoring and Control System (EMCS, UMCS),

b) Engineered Smoke Control System (ESCS),

c) Fire detection and alarm system,

d) Generator monitor and alarm system,

e) Medical gas monitors and alarms,

f) Closed Circuit TV (CCTV) for security (space designated for monitor and programmable system and control equipment and video cassette recorder),

g) Refrigeration temperature monitor and alarm system (Blood Bank, Food Service, Pharmaceuticals (Pharmacy and Material) and Morgue),

h) Public address master microphone and paging zone selector panel,

i) Radio paging console,

j) Telephone attendant console,

k) Security system console,

l) EPABX alarms and Operator Console, and

m) Educational TV VCRs

n) Card Access System Operator Console

11.3 Central Telephone System Requirements. The telephone equipment used to provide service will vary by the type and size of the facility and shall comply with local exchange carrier, local codes, and requirements for telecommunications connectivity.

11.3.1 Medical Centers and Hospitals. All hospitals and medical centers shall have a highly "survivable" telephone system. The primary method of satisfying this requirement is to install an Electronic Private Automatic Branch Exchange (EPABX) in the facility. The EPABX shall include redundant equipment with automatic failure transfer mode to reduce system outages. The EPABX shall have trunk connectivity to the installation Dial Central Office (DCO) for access to DSN, WATS, FTS and the public telephone system. Large facilities with a central appointments function may have direct trunks to the public telephone system. In some cases a Remote Switching Unit (RSU) driven from an installation's Digital DCO maybe utilized. The RSU should only be considered after the using Military Department has done a risk analysis and determined it can accept the restricted RSU operating capability available in an emergency.

11.3.1.1 Dedicated Intercom Systems. Dedicated intercom systems which operates totally independent of the telephone system shall be provided as stipulated by the using Military Department. These are typically installed in mirror observation room in psychiatry areas, children's observation play rooms and MRI and CAT Scan rooms.

11.3.2 Medical and Dental Clinics. For free standing clinics, i.e., medical, dental and med-dental, the telephone switching system shall be highly reliable but need not meet the stringent survivability requirements for hospitals and medical centers. Primary consideration should be given to direct service to the clinic from the installation DCO. An Electronic Key System (EKS) or small EPABX shall be used where direct DCO service is not cost effective.

11.3.3 Cost Study Recommendations. A recommendation based on cost factors, user requirements and the installation telephone system shall be made by the using service communications organization for all medical and dental facilities. The specific equipment and configuration of the telephone system shall be as required by the using Military Department.

11.4 Central Dictation System. Design will include conduit, cable, and outlets for Government furnished, Government installed (GFGI) central dictation systems. Access to the central dictation system will be provided on telephones as shown in the telephone station requirement schedule (TSRS). Dictation access from outside the facility will be through the telephone operator or through DID lines

into Central Dictation. Refer to using Military Department for any additional requirements.

11.5 Facsimile System (FAX).

11.5.1 Design will include outlets, wire, and ports on the telephone switch to accommodate GFGI facsimile equipment. The number of outlets and their specific locations will be identified by the using Military Department during the design process.

11.5.2 The system will use telephone lines and will access other stations through the telephone system. Ensure the facsimile outlets are included in the telephone system line count and are shown on the TSRS. Facsimile outlet locations will be provided by the user.

11.5.3 Refer to using Military Department for any additional requirements.

11.6 Public Address, Paging, and Program Distribution Systems. Public address system(s) shall be accessible from the telephone system. Refer to using Military Department for additional requirements.

11.7 Fire detection and Alarm System. Refer to Section 13 for requirements.

11.8 Energy Monitoring and Control System (EMCS). Refer to Section 7 for requirements.

11.9 Intrusion Detection System. Refer to Section 14 for requirements.

11.10 Nurse Call System. A nurse call system, tone visual and/or audio-visual, shall be provided in all facilities. For general information refer to ANSI/IEEE Standard 602 - 1986 (reference 11i). Exact configuration and operational requirements of the system shall be identified by the using Military Department.

11.10.1 Hospitals. A nurse call system shall be provided in the following areas (connected to the emergency power system):

a) Nursing Units, i.e., Medical/Surgical, OB/Gyn, Pediatrics, Neuropsychiatric, and Intensive and Coronary Care.

b) Surgical Suite,

c) Delivery Suite,

d) Nursery,

e) Emergency Clinic

f) Radiology.

11.10.2 Clinics. This paragraph applies to medical and dental clinics which are either free standing or integral to a hospital or medical center. For medical clinics, a tone visual nurse call system shall be provided for treatment rooms and patient toilets. For dental clinics, a tone visual nurse call system shall be provided in dental surgery and recovery areas.

11.11 Card Access. An electronic card access system may be provided when required by using Military Department.

11.12 Miscellaneous Communications Systems. Radio Paging Systems, Emergency Medical Service (EMS) Communications, Clocks, Physiological Monitoring, Special Monitoring Equipment, Medical Information Systems, and Entertainment Television Distribution Systems shall be provided according to using Military Department requirements.

REFERENCES

11a. ANSI Y32.2, "Graphic Symbols for Electrical and Electronic Diagrams."

11b. ANSI C2, "National Electrical Safety Code."

11c. NFPA 70, "National Electric Code."

11d. NFPA 99, "Health Care Facilities."

11e. NFPA 101, "Life Safety Code."

11f. MIL-STD-188/124, "Grounding, Bonding and Shielding for Common Long Haul/Tactical Communication Systems Including Ground Based Communications-Electronics Facilities and Equipments."

11g. MIL-HDBK-419, "Grounding, Bonding and Shielding for Electronic Equipments and Facilities," Volume 1 and 2.

11h. ANSI/IEEE Standard 602, "IEEE Recommended Practice for Electrical Systems in Health Care Facilities."

11i. MIL-HNBK-1008, "Fire Protection."

11j. EIA/TIA 568A, "Commercial Building Telecommunications Standard."

11k. EIA/TIA 569, "Commercial Building Standard for Telecommunications Pathways and Spaces."

11l. EIA/TIA 606, "Administration Standard for Telecommunications Infrastructure of Commercial Building."

11m. EIA/TIA 607.

BLANK PAGE

SECTION 12: PROVISIONS FOR THE DISABLED

12.1 General. This section provides design guidance on the application of accessibility requirements. Facilities are required to be accessible to disabled persons and shall be designed and constructed or retrofitted in accordance with the Uniform Federal Accessibility Standards (UFAS) (reference 12a). All facilities shall also be designed and constructed or retrofitted in accordance with the Americans with Disabilities Act Accessibility Guidelines (ADAAG) (reference 12b) whenever the ADAAG provides equal or greater accessibility requirements than the UFAS. In general, all facilities worldwide which are open to the public, or to limited segments of the public, or which may be visited by the public in the conduct of normal business, shall be accessible to disabled persons.

12.2 Military Exclusions. Facilities which are intended for the use of, or occupancy by, or staffed by only able-bodied civilian and/or military personnel need not be designed to be accessible by disabled persons; however, accessibility is recommended. The term "able-bodied military personnel" is defined as all active duty military personnel. Temporary facilities, such as troop aide stations and fleet hospital mobilization units used during military conflicts need not be accessible.

12.3 Overseas Facilities. DoD funded facilities constructed overseas will be accessible. Facilities for which the United States contributes a portion of the construction cost but does not control design criteria (such as NATO-funded facilities) need not be accessible. Facilities being constructed by or for use by the United States under the laws, codes, rules, and regulations of another country need not be accessible. Facilities being leased by the United States in other countries need not be accessible. Accessibility, however, is recommended.

12.4 Waiver Authority. The Architectural Transportation Barriers Act permits the modification or waiver of the UFAS and the ADAAG, on a case-by-case basis, if it can be shown that the modification or waiver is clearly necessary. Requests for modification***s*** or waiver***s*** should be sent to each service designated Design Agent, who will review the request. If the Design Agent agrees with the waiver request, it will be forwarded to DMFO who will consult with the Deputy Assistant Secretary of Defense (Civilian Personnel Policy) to determine whether a modification or waiver should be pursued and subsequently granted. Waivers will be granted only in extraordinary circumstances on a case by case basis.

12.5 DMFO Compliance Requirement. The DMFO policy is that all spaces serving patients, staff, and visitors shall be designed to be accessible to the disabled. DMFO programs adequate net area to design all patient dressing rooms, patient bedrooms, and patient bedroom toilets as accessible spaces even though UFAS/ADAAG requires only 10% of these spaces to be accessible.

12.6 Medical Device Controls. Controls for medical gases, Operating Room lights, sterilizers and similar medical equipment may be located as recommended by the equipment manufacturer(s) and not within the reach ranges required by UFAS.

12.7 Interpretations and Waivers.

12.7.1 Interpretations. The Architectural and Transportation Barriers Compliance Board (ATBCB) will provide technical assistance and interpretations to UFAS and the ADAAG directly to the Design Agents. A copy of all interpretations and waivers obtained by the Design Agents from

ATBCB shall be provided to the DMFO for incorporation in the next update of this Handbook. The ATBCB has provided written interpretations to UFAS on questions posed to them. These interpretations are applicable to all DMFO projects and have been included in Appendix D.

12.7.2 Waivers. Waivers have been granted by ASD(FM&P) and are included in Appendix D for further guidance on projects where the same conditions exist.

REFERENCES

12a. FED-STD-795, "Uniform Federal Accessibility Standards" (UFAS), April 1, 1988.

12b. Americans with Disabilities Act Accessibility Guidelines (ADAAG), January 24, 1992.

SECTION 13: FIRE PROTECTION

13.1 General. This section provides fire protection design guidance for all facilities which provide medical, psychiatric, obstetrical, or surgical care on a 24-hour basis for four or more inpatients who are mostly incapable of self-preservation because of mental or physical disability and are bedridden, nonambulatory, or have impaired judgement. This section also provides fire protection design guidance for free-standing Clinics and Dental Clinics, and medical support facilities such as, blood storage and medical warehouses, medical research laboratories, pharmaceutical manufacturing facilities. This section does not apply to contingency facilities, which will be governed by "minimum, austere, but adequate," given the least stringent requirements which can safely protect the contents of the contingency facility.

13.2 Criteria.

13.2.1 Life Safety and Fire Protection Concepts. The life safety concept and the fire protection concept shall be in accordance with NFPA 101 (reference 13a).

13.2.2 Codes and Standards. Except as modified herein, designs for facilities shall comply with the latest edition of MIL-HDBK-1008B (reference 13b), the standards contained in the current National Fire Codes published by the National Fire Protection Association (NFPA), and the Joint Commission on Accreditation of Health Care Organizations (JCAHO) Manual (reference 13c).

13.2.3 Fire Safety Evaluation System (FSES). NFPA 101M (reference 13d) may be used to assess existing facilities and for design concept development of Life Safety Code upgrade projects at existing facilities. NFPA 101M may be considered for semi-permanent and contingency facilities if approved by the appropriate Design Agent and DMFO. NFPA 101M will not be used in any design for new permanent facilities. (See Appendix C for JCAHO requirements and procedures.)

13.3 Construction. Classification of construction types shall be as specified in MIL-HDBK-1008B (reference 13b).

13.3.1 Building Height/Allowable Floor Area. Building height and allowable floor area limitation shall be in accordance with MIL-HDBK-1008B (reference 13b).

13.3.2 Alterations and Renovations. To the extent possible, alteration, renovation, modernization and rehabilitation work of existing facilities shall comply with the requirements for new construction in accordance MIL-HDBK-1008B (reference 13b).

13.3.3 Upgrades of Existing Buildings. The minimum level of fire safety required for upgrade of existing facilities shall comply with the requirements for existing construction of NFPA 101 (reference 13a).

13.3.4 Construction Operations. Fire protection and life safety provisions shall be provided during construction as specified by MIL-HDBK-1008, the National Fire Codes and the Interim Life Safety Measures (ILSM) of the JCAHO Manual (reference 13c). When a facility is to be occupied during a renovation, alteration or upgrade, consideration shall be given to the potential impact on life safety in occupied areas. Construction and demolition phasing shall be planned so that the

integrity of fire and smoke partitions, stairways, and vertical shafts, which are contiguous with inpatient areas, are maintained to the highest level possible. Appropriate safety measures in accordance with NFPA 101 (reference 13a) will be incorporated into temporary structures.

13.4. Occupancy Classification. Occupancy classification of medical facilities shall be defined by NFPA 101 (reference 13a). Facilities or portions of facilities, which are not required to be health care occupancy, may be classified as other occupancies provided that the requirements of NFPA 101 are satisfied.

13.5. Means of Egress. Facilities shall meet the requirements of the Life Safety Code, NFPA 101 (reference 13a).

13.5.1 Horizontal Exits. Floors with inpatient sleeping rooms shall utilize horizontal exits to the fullest extent possible to maximize "defend-in-place" evacuation.

13.5.2 Areas of Refuge. Total evacuation of the occupants to the outside of the building is often impractical for inpatients located on upper floors. Therefore, areas of refuge shall be implemented through the use of smoke compartmentation when a rapid and complete evacuation is not feasible.

13.6 Fire Detection and Alarm Systems (FDAS). Fire alarm systems shall be provided for all facilities in accordance with MIL-HDBK-1008B (reference 13b), and NFPA 101 (reference 13a), NFPA 99 (reference 13e), and NFPA 90A (reference 13f). These systems shall be installed in accordance with NFPA 72 (reference 13g).

13.6.1 Automatic Smoke Detection. Smoke detection shall be provided where required in accordance with NFPA 101 (reference 13a), NFPA 101M (reference 13d), NFPA 90A (reference 13f), NFPA 72 (reference 13g), and MIL-HDBK-1008B (reference 13b).

13.6.2 Occupant Notification. Where "defend-in-place" evacuation is provided, alarm signals shall be coded.

13.6.3 Power Supply. FDAS power supply shall be fed from the life safety branch of the essential electrical system.

13.7 Smoke Control Systems. Smoke control systems shall conform to NFPA 92A (reference 13h), NFPA 92B (reference 13i) and the appropriate sections of NFPA 101 (reference 13a). When a smoke detection system is used to initiate smoke control, it shall conform to the recommendations of NFPA 72 (reference 13g).

13.8 Automatic Sprinkler Protection. All facilities shall be protected throughout by an approved automatic sprinkler system installed in accordance with NFPA 13 (reference 13j). Exception: Stand-alone, detached, outpatient clinics, classified as business occupancies, which are, one or two stories in height and a minimum of 1-hour fire resistive construction.

13.8.1 Quick Response Sprinklers. Where automatic sprinkler protection is provided to upgrade or renovate existing facilities, listed quick response or residential sprinklers shall be provided throughout
smoke compartments with patient sleeping rooms in accordance with NFPA 101 (reference 13a).

13.8.2 Kitchen and Food Service Equipment. Extinguishing systems shall be provided in food preparation areas. Self-cleaning water-wash ventilators with waterspray fire protection systems shall be used to protect cooking surfaces, ducts, grease removal devices, and range hoods in accordance with NFPA 96 (reference 13k).

13.9 Electronic Communications and Automatic Data Processing (ADP) Installations. Rooms and areas housing EPABX equipment or other electronic communications, large rooms containing ADP equipment, and electronic equipment providing control of critical medical equipment (i.e., MRI, CT Scanner) shall meet the requirements of NFPA 75 (reference 13l) and be protected in accordance with MIL-HDBK-1008B (reference 13b).

13.9.1 Automatic and Manual Controls. Controls to disconnect power to all electronic equipment and shut down the air conditioning system shall be provided.

13.9.2 Halon Fire Extinguishing Systems. Use of halon fire extinguishing systems is prohibited.

13.10 Atriums/Malls. Atriums and medical malls shall meet to the requirements of NFPA 101 (reference 13a) and shall be designed to comply with NFPA 92B (reference 13i).

13.11 Integrated Building Systems (IBS). For a functional description of Integrated Building System see Section 19.

13.11.1 Requirements. Fire safety requirements for facilities designed using the Integrated Building System (IBS) shall be in accordance with the same codes and standards applicable to any non-IBS facility. The following IBS criteria is based upon a special study titled Fire Performance of Interstitial Space Construction System (NBSIR 85-3158) (reference 13m), conducted by the Institute of Standards and Technology (NIST). The IBS criteria has been coordinated with the requirements of the referenced codes and standards to accommodate the nontraditional characteristics of the IBS approach. Therefore, where variations between this standard and other applicable codes and standards occur, the fire safety design requirements for IBS facilities indicated in this standard shall govern.

13.11.2 Basic Concept. The integration of IBS facility building modules with NFPA smoke compartmentation requirements is a basic fire protection/life safety principle of the IBS concept. In IBS designs, smoke compartmentation shall be separated by fire rated smoke barriers. The IBS modular zones which require smoke barrier separation for smoke compartmentation are the occupied and connection zones.

13.11.2.1 Coordination of Systems. Supply services to any system module shall serve an area that corresponds to the smoke compartment, including electrical power, fire alarm zoning, automatic sprinkler zoning, and HVAC zoning. Supply services are defined as utilities, i.e., water supply, electrical power and medical gases that originate outside of the module, feeding utilities which are centrally located in the utility pod of each system module and then distributed to each functional zone via the distribution zone of each system module.

13.11.2.2 Number of Stories. The walk-on platforms constituting the floor level of the distribution zones do not constitute separate

stories. Each occupied zone and its corresponding floor is counted as an independent floor level.

13.11.3 Construction.

13.11.3.1 Floor-to-Floor Fire Separation. A 2-hour fire resistive separation is required between floors. The fire resistance rating runs in a horizontal plane along the utility pod floor, then vertically along the wall separating the utility pod from the occupied zone. The fire resistance rating then continues along the walk-on platform to the outside wall. The walk-on platform of the distribution zone shall be designed in accordance with NBSIR 85-3158 (reference 13m). See Figure 19-1.

13.11.3.2 Occupied Zone.

a) The building modules of IBS facilities at the occupied zone shall be the designated smoke compartments separated from each other by 1-hour fire rated construction. These separations shall meet the smoke barrier requirements of NFPA 101 (reference 13a).

b) Walls, smoke barrier partitions, occupancy separations (not greater than 2-hour fire resistance) and horizontal exit walls shall terminate at the bottom of the walk-on platform. Occupancy separations (2-hour fire resistance and greater) of multi-story facilities shall not terminate at the walk-on platform, but pass continuously through the distribution zone and structural floor.

13.11.3.3 Distribution Zone.

a) Dividing the distribution zone into smoke compartments is not required.

b) Horizontal exit walls are not required to extend up through the distribution zone.

13.11.3.4 Utility Pods.

a) Utility Pods shall be separated from the distribution zones by 1-hour fire rated construction and from the occupied and connection zones by 2-hour fire resistive construction. Ducts penetrating the 2-hour fire resistive separation shall be fire dampered.

b) The structural members in the utility pod shall have a 2-hour fire resistive rating.

13.11.3.5 Structural Members.

a) Columns. All columns shall be provided with the required degrees of fire resistance within all zones.

b) Occupied Zone Floor. The occupied zone floor slab, except at the utility pod, is not required to have a fire resistance rating, but all penetrations shall be firestopped.

c) Other Structural Members. Structural members located within the distribution zone and supporting more than one floor, such as columns and girders and trusses, shall be protected in accordance with the fire resistance requirements of the Uniform Building Code. Other structural members within the distribution zone are not required to be

fireproofed. Lateral and seismic bracing within the distribution zone need not be fireproofed provided these members do not carry vertical loads (live or dead).

13.11.3.6 Openings. To prevent fire and smoke migration into the distribution zone, openings through the walk-on platform shall be protected as follows:

a) All penetrations (ducts, pipe, cables, conduit, etc.) shall be firestopped at the walk-on platform with approved material in accordance with NBSIR 85-3158 (reference 13m), or with an approved through-penetration protection system.

b) Shafts shall be enclosed in properly rated construction and tightly sealed for the full perimeter of the penetration at the walk-on platform in accordance with NBSIR 85-3158 (reference 13m), or with an approved through-penetration protection system.

13.11.3.7 Ducts and Dampers.

a) Fire dampers are not required where ducts penetrate the 1-hour fire rated partition between the utility pod and the distribution zone.

b) Fire dampers are required where ducts penetrate 2-hour fire resistive partitions between the utility pod and the occupied and connection zones.

c) Fire dampers are not required in ducts for openings in the walk-on platform less than or equal to 225 square inches. This includes supply ducts from the distribution zone to the occupied zone, exhaust ducts, and return ducts from the occupied zone to the distribution zone.

d) The percent opening of unprotected duct penetrations shall in the walk-on platform above any smoke compartment not exceed 0.43 percent.

e) Flexible duct work (Class 1-UL Standard 181) is permitted in the distribution zone for connections less than 8 ft. long and shall be no larger than 12 inches in diameter.

f) Smoke dampers are required in ducts in the distribution zone where a duct serves more than one smoke compartment. Where required, the smoke damper shall be located in the duct at the approximate location where the smoke barrier is located below in the occupied zone.

13.11.4 Sprinkler Systems.

13.11.4.1 Approved automatic supervised sprinkler protection shall be provided throughout the occupied zone and in the utility pod. Sprinkler protection is not required in the distribution zone.

13.11.4.2 Fire alarm system supervision and annunciation of sprinkler system zones shall be coordinated with the compartmentation of each IBS module.

13.11.5 Standpipe Systems.

13.11.5.1 Each enclosed exit stair shall include an automatic Class I standpipe.

13.11.5.2 The sprinkler riser(s) for a module shall be combined with the standpipe riser(s) within the module.

13.11.5.3 Hose outlets with indicated sizes will be provided:

a) 64 mm (2-1/2 in.) on the landings at the occupied zone,

b) 38 mm (1-1/2 in.) at the entrances to the distribution zone located in the utility pod,

c) 38 mm (1-1/2 in.) on each side of a barrier for horizontal exits.

13.11.6. Smoke Control and Management. Each facility shall be evaluated on an individual basis for the requirements for a smoke management system. Typically the means to manage the flow of heat, smoke and other products of combustion are inherent to IBS facilities. Building systems shall be coordinated and interfaced in accordance with NFPA 92A and NFPA 92B (references 13h and 13i) to achieve smoke control and management. An engineered smoke control system is required by NFPA if windows in patient rooms are not operable. "Smoke removal" is not considered an "engineered smoke control system."

13.11.6.1 Zoned smoke control shall be provided for IBS facilities provided with quick response sprinklers throughout smoke compartments with patient sleeping rooms and which are greater than two stories. Where inpatients can be evacuated directly outside without requiring assistance to traverse a vertical exit component, smoke control is not required. Performance criteria for smoke management shall be established for each facility.

13.11.6.2 Smoke management shall be provided for atriums, malls and other large volume spaces.

13.11.6.3 A means for purging the distribution zone of smoke and other products of combustion for post fire operations shall be provided. Typically a manual smoke purge system shall be provided for each individual system module with manual remote control available from the fire emergency control center.

13.11.6.4 Every effort shall be made to design all HVAC systems to be contained within an individual module. Smoke management should be zoned and annunciated by IBS module.

13.11.7 Fire Detection and Alarm Systems. Each project shall be evaluated to determine the need for detection systems in special areas (distribution zone) using NFPA 101 (reference 13a) as a guide. All fire protection devices shall annunciate at the fire emergency control center. System initiating device signals shall be annunciated by category of signal (alarm, supervision, trouble), type of device and location (floor and module).

13.11.7.1 System supervision and alarm zoning shall be coordinated with the fire and smoke compartments, and IBS zones of each module.

13.11.8 Distribution Zone.

13.11.8.1 IBS Concept. The distribution zone is an unoccupied space and shall not be utilized for any storage.

13.11.8.2 Access Door. An access door from each required exit stairway shall be provided to the distribution zone. Access doors shall be locked and accessible only by key. Each access door shall bear the sign "Storage in This Area is Prohibited by Order of the Fire Marshall." A similar sign shall also be placed inside the space also.

13.11.8.3 Means of Egress. The access door is the primary means of egress for distribution zone occupants and shall meet the exit and ease of operability requirements of NFPA 101 (reference 13a).

13.11.8.4 Fire Alarm Features. Fire alarm devices located in the distribution zone are part of the module fire alarm evacuation system.

a) A manual pull station shall be provided in the distribution zone at each access door. Zoning for annunciation of this device shall be coordinated with the exit enclosure serving the module occupied zone. The manual pull station shall have an independent alarm annunciation zone.

b) Alarm indicating devices shall be provided for occupant notification throughout the distribution zone. Upon any alarm initiating signal within a module, the indicating devices within the distribution zone of that module shall activate.

c) Smoke detection is required at each elevator access landing in the distribution zone. The smoke detector(s) shall be connected to the elevator controls and provide elevator response per NFPA 101 (reference 13a).

13.11.8.5 Marking of Means of Egress. Exit signs shall be illuminated and located at each access door. Two signs shall be provided; one above the doorway and one adjacent to the doorway within 36 inches of the walk-on platform. These signs shall be in accordance with the size and illumination requirements of NFPA 101, Section 5-10, "Marking of Means of Egress" (reference 13a).

13.11.8.6 Egress Lighting. Egress illumination shall be provided. The degree of illumination and location of lights shall be determined for each module.

13.11.8.7 Electrical Power. Exit signage and egress lighting shall be on life safety circuits and provided with standby or emergency power. Since the distribution zone space is normally unoccupied, light switches, located at each access doorway, shall activate normal lighting, egress illumination, and exit sign illumination within the module. This shall minimize electrical usage and replacement of lamps in the distribution zone.

13.11.8.8 Cables and Conductors. All cables and conductors shall be run in metal cable trays in accordance with the requirements of NFPA 70 (reference 13n). The cables shall be segregated into separate compartments within each cable tray.

REFERENCES

13a. NFPA 101, "Life Safety Code."

13b. MIL-HDBK-1008B, "Fire Protection."

13c. Joint Commission on Accreditation of Healthcare Organizations (JCAHO) Manual.

13d. NFPA 101M, "Fire Safety Evaluation System (FSES)."

13e. NFPA 99, "Health Care Facilities Handbook."

13f. NFPA 90A, "Air Conditioning and Ventilation Systems."

13g. NFPA 72 "Signaling Systems."

13h. NFPA 92A, "Smoke Control Systems."

13i NFPA 92B, "Smoke Management System in Malls, Atria, and Large areas.

13j. NFPA 13, "Sprinkler Systems Installation."

13k. NFPA 96, "Removal of Smoke and Grease Laden Vapors from Commercial Cooking Equipment."

13l. NFPA 75, "Protection of Electronic, Computer/Data Processing Equipment."

13m. NBSIR 85-3158, "Fire Performance of Interstitial Space Construction Systems."

13n. NFPA 70, "National Electric Code."

SECTION 14: SECURITY

14.1 General. This section provides security/loss prevention guidance.

14.1.1 Design Criteria. Guidance for security design is provided in MIL-HDBK-1013/1 (reference 14a) and military department criteria.

14.1.2 Passive Security. Facilities should be designed to maximize passive security, which largely depends on staff awareness of the presence of unauthorized persons. This concept depends on the utilization of security type zoning within the facility. All areas in the facility should be placed in designated classifications: unrestricted, controlled, or restricted. The purpose of physical security is to make unauthorized access to assets so difficult that an intruder will hesitate to attempt a facility penetration or will, in the course of such efforts, be forced to take actions which will assist in detection or apprehension. Specific military department requirements shall be followed. The following are recommended considerations:

14.1.2.1 Access Control. Proper design permits staff to control specific areas of responsibility, reducing or eliminating the opportunity for undesirable behavior within a designated area, by restricting entry to only those authorized personnel having legitimate reasons for access. Consideration should be given to location and design of department reception areas and other operational functions to assist in controlling entry.

14.1.2.2 Proximity Placement. Planning and design should take into consideration collocating departments of similar sensitivity and access requirements, if feasible, and design of parking, entrances, and personnel traffic patterns to maximize the effectiveness of an access control system.

14.1.2.3 Good Visibility and Communication. Location of reception desks should afford unrestricted visibility of entry ways thereby establishing an entry control point. Traffic patterns must also bring traffic to these control points to ensure effective staff control.

14.1.3 Physical Construction. Physical construction should be designed to resist break-in where necessary, due to contents or function, i.e., Cashiers, Pharmacies, and Store Rooms.

14.1.4 Electronic Security Systems. Electronic security, to include Intrusion Detection Systems (IDS), duress alarms, Electronic Access Control and Closed Circuit TV (CCTV), shall be provided for facilities when required by the using Military Department.

14.1.5 Keys and Locks. The master key and lock plan for the facility shall provide multiple levels of physical security as well as entry control.

14.2 Levels of Security Resistance. The essential requirement is to provide an appropriate level of security protection for personnel and government property. The objective is to decrease the opportunity for security problems to develop. The following levels of security resistance are defined according to the operational mission:

14.2.1 Medical Clinics, Dental Clinics, and Other Medical Facilities Excluding Hospitals. In addition to the above:

14.2.1.1 Protection shall consist primarily of IDS sensors on exterior doors with alarms monitored at the Central Security Operation Point for the military installation.

14.2.1.2 Other basic security devices shall be included for narcotics lockers, precious metal safes, and medical bulk storage warehouses with local and remote alarms.

14.2.2 Hospital. Security shall be enhanced in addition to the above by:

14.2.2.1 Traffic patterns that can be controlled with a minimum of entrance points during off-duty hours in a facility staffed 24-hours a day. In small base/station hospitals where the Emergency Reception is the only point of entry that is manned, visitors to the facility should enter within direct control of the Emergency Reception desk. Other entrances such as Dental Clinic or hospital and clinic entrances shall be locked after duty hours. IDS sensors shall be installed on these doors.

14.2.2.2 Remote, electrically operated locks which can be controlled from a central point such as Emergency Reception or Command and Control Center. This system establishes the Emergency Reception and/or the Command and Control Center as the central security operations point of the hospital after duty hours. These locks can be released automatically, when fire and smoke alarms are activated, for those doors which are for fire egress.

14.2.2.3 Vaults and Secure Storage areas require special design considerations. See paragraph 14.4, Sensitive Areas.

14.2.2.4 Intrusion detection systems shall be planned and designed to meet the security requirements of the location and the using military department directives.

14.2.2.5 Closed circuit television may be considered in those areas specified by the using Military Department.

14.2.2.6 Card access systems to exterior doors and sensitive areas such as computer rooms, pharmacies, and other areas shall be as specified by the using Military Department.

14.3 Security Systems. A security system is a composite of people, equipment, facility construction, and operational procedures. Functionally, these resources break down into six categories of security components that involve: intelligence, personnel, access control, entry control, physical structures and barriers, security forces, and electronic security systems.

14.3.1 Component Role. Each of these components plays its own supporting role in the achievement of physical security. Intelligence activities provide a variety of data that are essential to the planning and design of a security system. These data include intelligence estimates of the relative skills of potential adversaries, the capabilities and availability of new penetration measures, and the anticipated attack patterns and tactics that may be used. Establishing levels of access for personnel provides a means of establishing and maintaining control over the movement of personnel to achieve security compartmentalization. Physical structures form barriers that the intruder must penetrate to perform his or her mission. Security forces perform

many of the functions that keep the overall physical security plan in operation. Electronic security systems permit efficient use of security forces by allowing available manpower to be shared in the protection of a number of areas.

14.3.2 Component Interrelationship. It is evident that there are symbiotic interrelationships among the elements of physical security systems. The interrelationship between an intrusion detection system and security forces requires mandatory response by the security force to all alarms and requires the presence of a security force in the immediate area to provide a higher level of active protection if the intrusion detection system becomes inoperative. Interrelationships also exist among intrusion detection systems, security forces, and structures. Where physical security protection is to be provided by intrusion detection systems and security personnel, it is essential that an attempted intrusion be impeded by physical structures to allow time for security forces to respond to alarms. The intrusion detection system must detect the attack on the outermost barrier. This is part of the delay system. It should be noted that intrusion detection systems generally provide no protection against a rapid, violent attack aimed at the destruction of the facilities or material. Entry controls also support the role of intrusion detection systems. Often, intrusion detection systems must be deactivated and placed in a non-detecting mode during normal working hours. During these periods, entry controls provide a means to prevent unauthorized persons from entering a protected facility. An intrusion detection system using interior detectors will also generally detect unauthorized persons who stay behind after working hours. Entry controls also restrict free access by persons whose intent may be to tamper with intrusion detection system components or circuits. The effectiveness of an intrusion detection system is dependent upon the combined use of intelligence activities with multiple levels of access for personnel. Multiple levels of access for personnel provide a measure of assurance that those who work on a security system are reliable persons who will not compromise the system. It must be recognized that using personnel access control levels provides no absolute guarantee of a person's reliability and that physical security measures are largely ineffective as a defense against collusion of personnel.

14.3.3 Electronic Security Systems. The electronic security system's performance parameters include the following:

14.3.3.1 Any alarm system under consideration shall:

a) Be capable of promptly detecting penetration through protected doors on the exterior of the facility and into each protected interior area. Any movement within the protected area should also cause an alarm to activate,

b) Be reasonably flexible; that is, used to protect large or small areas with small cost differentials,

c) Provide a remote annunciator panel in the location(s) prescribed below to facilitate prompt response to alarms. The system should also provide alarm annunciation when the mode of operation, secure or access, is changed at the control unit.

d) Have a reasonable degree of immunity to nuisance alarms or other influences not related to illegal attempts against the protection area.

e) Annunciate alarms at locations specified by the using Military Department, i.e. the Communication Center, Emergency reception, EMCS, and installation's Security Police Office,

f) Be served by the hospital's essential equipment back-up power sources.

14.3.3.2 Types of systems or equipment that may be considered include:

a) Intrusion detection devices on exterior doors and on entrances to individual clinics, departments, high value or controlled substance storage areas, etc.

b) Duress alarms for Pharmacies, Vaults, Nurse Stations, Cashier cages, Food Service cashiers, Emergency Control desks, Clinic Control desks, and other points throughout the facility that may require duress alarm protection as determined by the using Military Department.

c) Closed circuit television monitoring by way of a central security system for all main exterior entrances, Emergency Reception and Clinic Lobbies, Dental Clinic entrances, Food Service docks, Medical Material docks, and major internal Lobbies along with escalators, stairwells, and elevators.

d) Other systems that may be considered include: remote electrically operated locks, electromechanical card access systems, magnetic hold-closed devices, and electronic security system interface with the CCTV, EMCS or ESCS, where applicable.

14.4 Sensitive Areas. Sensitive areas/rooms shall be designed to store valuable resources, i.e. funds, narcotics, dangerous drugs, and controlled substances/material. The most cost-effective method of providing adequate storage for these sensitive resources shall always be selected. If, after a thorough analysis, the need for a Vault is validated, attention shall be focused on the items to be stored. Special consideration for sensitive areas requiring security include:

14.4.1 Fund Storerooms. Design consideration shall include the possible use of roll-up shutters, special door construction and locks, prevention of access from ceiling spaces, intrusion detection system security glazing for service windows and special key control.

14.4.2 Safes. Drugs classified as Schedule I or II controlled substances under the Controlled Substance Act of 1970 must be stored in safes conforming to standards established by "Manual for Drug Security" of the Bureau of Narcotics and Dangerous Substance (reference 14b). Drugs classified as Schedule III through V may also be stored in safes/vaults as deemed appropriate by the using Military Department.

14.4.3 Vaults. The minimum physical security standards for the storage of narcotics, dangerous drugs, and controlled substances are established by the "Manual for Drug Security." Features to be considered for Vault storage areas are outlined in MIL-HDBK-1031/1, Section 7: Vaults and Strongrooms (reference 14a), and using Military Department directives.

14.4.4 Pharmacy. Doors to Pharmacy shall be kept at a minimum and locked with security locks. Lock and key systems for this area will be capable of being closely controlled. Intrusion detection devices shall be installed on all doors and windows in the Pharmacy. Windows and ceilings

should be protected in a manner which prevents unauthorized entry into the room. Walls surrounding the Pharmacy shall be constructed in accordance with the "Manual for Drug Security" (reference 14b) and MIL-HDBK-1013/l (reference 14a).

14.4.5 Medical Material Storage. In addition to the criteria contained under Pharmacy above, high value, critical, and pilferable resources stored in this type of storage area/building shall be enclosed within two or more time-delayed barriers, (i.e., fences, security cages, building walls, vaults, or locked doors). For specifics, see MIL-HDBK-1013/1 (reference 14a), and using Military Department directives.

14.5 External Security. External security protection should be provided primarily by proper illumination and by use of parking lot designs that minimize staff walking distance to entrances.

REFERENCES

14a. MIL-HDBK-1013/1, "Design Guidelines for Physical Security of Fixed Land-Based Facilities."

14b. "Manual for Drug Security," Bureau of Narcotics and Dangerous Substances.

BLANK PAGE

SECTION 15: CONTINGENCY FACILITIES

15.1 General. This section will be issued at a later date.

BLANK PAGE

SECTION 16: MEDICAL AND DENTAL EQUIPMENT

16.1 General. This section provides guidance on medical and dental equipment for facilities. Equipment procurement for projects shall be in accordance with MIL-STD-1691, "Construction and Material Schedule for Military Medical and Dental Facilities" (reference 16a). This standard provides a uniform basis upon which the using Military Department can identify items of construction and material and fix logistical and financial responsibility (see Section 1).

16.1.1 Approval of Equipment Design Features. Quality and type of equipment and furniture, e.g., stainless steel, steel, wood, gas fired or electric, shall be determined by the using Military Department in each instance, based on the intended life and mission of the facility and the location and circumstance under which construction is to be accomplished.

16.1.2 Approval of Substitutions. When design and space limitations necessitate substitution of equipment in the preparation of drawings, these substitutions shall be coordinated with and approved by the using Military Department. If the substitution results in a change in the Category E and F funding level (decrease or increase), it must also be coordinated with the DMFO.

16.2 Procurement. Provide logistical categories of equipment in accordance with MIL-STD-1691. The using Military Department will transfer items of existing equipment to the new or altered facility whenever feasible and economical. This decision to reuse existing equipment shall be based upon the life expectancy of the equipment at the time of beneficial occupancy (BOD), the repair costs experienced with the existing unit, and the operational considerations involved in moving the equipment prior to operation of the new or altered facility.

16.2.1 Logistical Responsibility. Equipment shall be funded, procured and installed in accordance with the following legend. Each item of equipment is identified in MIL-STD-1691 (reference 16a) by these designations.

16.2.1 A- Contractor furnished and contractor installed (CFCI) from military construction appropriation funds (Military Construction Appropriations, MILCON).

16.2.2 B- Government furnished from the using Military Department's operating funds other than construction and installed by Contractor (GFCI) construction funds (Military Construction Appropriations, MILCON). Operating funds shall be as determined by the using Military Department.

16.2.3 C- Government furnished and government installed (GFGI) from existing assets or from funds other than MILCON as determined by the using Military Department.

16.2.4 D- Other (leased or rented equipment, or that obtained under special conditions as indicated). Funds shall be determined by the using Military Department and other than MILCON.

16.2.5 E- Government furnished and Contractor installed from Military Construction Appropriation funds (MILCON). Delay procurement until the latest date feasible that shall not interfere with project completion to acquire the latest technology.

16.2.6 F- Government furnished and government installed from Military Construction Appropriation funds (MILCON). Delay procurement until the latest date feasible that shall not interfere with project completion to acquire the latest technology.

16.2.7 G- Government furnished and government installed from other than MILCON funds through special justification, authorization and funding. Examples of category G equipment or equipment systems are Composite Healthcare (computer) Systems (CHCS) implementation and so forth.

16.3 Design. Develop equipment plans as a building system integrated with architectural, structural, mechanical, and electrical systems. Equipment shall be arranged and organized so as to provide adequate circulation, work flow, and maintenance clearances.

16.3.1 Layout and Clearances. Arrange equipment to provide service clearances and maintenance access with minimum disruption to work spaces. When expansion is anticipated in a project, allow for the addition of equipment without disruption or reconfiguration of work flow in the layout of sterilizing and sanitizing equipment spaces.

16.3.2 Recessed Equipment. Surgical storage consoles, wall-mounted panels, and accessories in operating rooms shall be flush mounted and of the wall-recessed or through-wall types, for aseptic control.

16.3.3 Casework. All built-in casework shall be fabricated and designated in accordance with Military Specification MIL-C-20709 (reference 16b). All other casework shall be designated, specified, and installed in accordance with MIL-C-29240 (reference 16c), MIL-M-29241 (reference 16d), and other specifications as directed by the Design Agent.

16.3.3.1 Provide corrosion resistant steel (CRS) or other nonporous, seamless joint casework in the following areas: operating and delivery rooms; their substerile and cleanup areas; laboratory (as required by the Military Department); central sterile supply decontamination and clean-up areas; and autopsy and its associated clean-up areas.

16.3.3.2 Movable, modular ("systems") casework systems may be used in projects deemed appropriate by the using Military Department.

16.4 Special Requirements. Special equipment and system planning and utility requirements are incorporated into other technical Sections.

16.5 Food Service Equipment.

16.5.1 Design, construct, and install all serving line and food preparation equipment according to the highest industry standards. Provide for mobility, flexibility, interchangeability, and ease of cleaning and maintenance for all specified equipment.

16.5.2 Automatic conveyors, belt lifts, and similar devices are unacceptable for delivering patients' meals to the nursing units. Unless special design instructions, approved by DMFO, are issued to the contrary, use a manual, mobile patient tray cart system.

16.5.3 When the kitchen is served by a central steam distribution system, the vegetable steamer-cooker and all other equipment that allows food to be brought into direct contact with live steam is to be served by

an independent steam generator. Boiler water treatment renders steam from a central steam plant unsuitable for direct contact with food.

16.5.4 Provide cart wash areas with a combination steam-water mixing unit and a 3 meter (10 foot) hose for washing carts. Provide the area with a floor drain and a separate exhaust fan for evacuating steam heat and vapors.

16.5.5 Specify a conveyor-type dishwasher with sizing dependent on anticipated workload. Provide a booster water heater capable of providing 60 degree C (140 degree F) wash and 82 degrees C (180 degree F) rinse cycle.

16.5.6 Provide the pots and pans wash sink assembly with a spray hose assembly located near the garbage disposer. When specified in the design guidance, automatic pot washers may be used at large facilities and include booster water heater capable of providing 60 degrees C (140 degree F) wash and 82 degrees C (180 degrees F) rinse cycle.

16.6 Dental. Various models of dental radiographic units require different structural wall supports. When two or more units are installed in the same room, use a single control unit when feasible.

16.7 High Technology Equipment. The planning for and inclusion of new or unique medical technology such as linear accelerators, Positron Emission Technology (PET), lithotripsy, Magnetic Resonance Imaging (MRI), hyperbaric chambers, etc., in a MILCON project is the responsibility of the DoD Defense Health Council (DHC). Project specific guidance on equipment of this category will be issued to the Design Agents by DMFO. Design shall be in accordance with the recommendations and guidance of the respective manufacturers.

16.8 Magnetic Resonance Imaging Facilities (MRI). The planning, design, and installation of a Magnetic Resonance Imaging (MRI) system in a Medical Treatment Facility requires extreme care to assure that the magnet is sufficiently isolated from ferromagnetic and radio frequency influences of the impacted environment and that the surrounding environment is isolated from the effects of the magnetic field. Therefore, the selection of the proper siting of the magnet is extremely important and shall be addressed in the earliest stages of the planning and design of the MRI system. Follow the specific guidance of the manufacturer of the selected equipment.

16.9 Hyperbaric Chambers. Hyperbaric oxygen therapy is used as an adjunct to the clinical and surgical treatment of certain diseases. It consists of administering oxygen to the patient at pressures greater than one atmosphere in a compressed air chamber. The DoD agency responsible for design requirements and certification is the Naval Facilities Engineering Command. This agency is available to assist Design Agents, using Military Departments, and A-E firms as needed.

REFERENCES

16a. MIL-STD-1691, "Construction and Material Schedule for Military Medical and Dental Facilities."

16b. MIL-C-20709, "Casework, Metal and Wood (Medical and Dental)."

16c. MIL-C-29240, "Casework Moveable and Modular for Hospital Laboratories and Pharmacies."

16d. MIL-M-29241, "Material Handling Units for Medical Facilities."

Section 17: Transportation and Material Handling Systems

17.1 General. This section provides guidance for the study, selection and design of transportation and material handling systems. The section is not intended to cover all aspects of transportation analysis or design, but rather to act as a standard for use by qualified medical transport consultants (MTC).

17.1.1 Scope. This section applies to horizontal and vertical circulation within the facility, and the transportation devices, equipment and methodologies required for efficient, cost effective and timely movement of people, equipment, materials, and the related materials management functions.

17.1.2 Phased Construction. Where phased construction is planned, studies and designs shall be provided for each phase. Transport system elements not required until later stages shall be designed to allow for phased installation. Phased installation shall be accomplished with a minimum of rework and without major disruptions to the facility's operations.

17.1.3 Waste Management Coordination. Section 18 deals primarily with defining the various waste streams and the proper methodology for disposing of waste. Transportation systems studies and design shall be closely coordinated with the waste management analysis.

17.1.4 Addition and Alteration Projects. These criteria are intended primarily for new construction, however addition and alteration projects will meet these criteria to the extent practicable.

17.2 Traffic Separation and Circulation. Traffic is categorized as: Pedestrian - inpatient, outpatient, staff and visitor; Vehicular (patient transport); Equipment and Materials (sterile, clean and soiled). Each category shall be reviewed independently to determine its unique transportation requirements.

17.2.1 Traffic Separation. Traffic patterns shall be established to separate the various traffic types in an efficient, logical, safe and secure manner, while maintaining levels of aseptic control consistent with the requirements of the facility. Traffic separation shall consider: patient privacy; handicapped access; aseptic control; routing efficiency; utilization of appropriate hardware systems, safety and security. Where circulation conflicts occur, traffic shall be prioritized as follows: patient; staff; equipment; visitors; and materials/logistics. When a facility is sufficiently large and complex to require more than four elevators, passenger and vehicular elevators should be separated.

17.2.2 Circulation. Overall circulation shall be designed to provide the most direct routing practical. Elevators shall be placed on the direct horizontal path between the areas they serve, wherever possible. Changes in direction should not be used for aesthetic or other non-functional reasons.

17.2.3 Materials Circulation. Materials traffic should be separated from patient and pedestrian traffic as noted on the Separation Guideline Matrix, Table 17.1. Where separate elevators are not required, materials traffic should be separated by schedule and policy. Primary horizontal materials circulation should occur on a single level, with vertical penetrations that are convenient to heavy use areas. It is undesirable for carts, pallet trucks, and similar material carriers to be pushed long

distances on floors and corridors routinely traveled by patients or visitors. Horizontal rights-of-way shall be established to: aid in directing traffic to the appropriate vertical core, while avoiding inappropriate elevators and other building areas; provide high levels of patient privacy; and eliminate potential contamination of clean and sterile areas.

17.2.4 Automated Cart Traffic. Shall not be planned in corridors, or spaces, with patient or visitor traffic. Automated cart traffic may occur in staff corridors and dedicated spaces, provided adequate warning and safety devices are furnished. Vertical movement of automated carts shall occur in dedicated elevators.

17.2.5 Clean and Soiled Material Separation. Materials management programs shall provide for clean and soiled separation consistent with all applicable codes and standards, including JCAHO.

17.2.5.1 Soiled Materials. Soiled materials are normally transported in separate covered or closed carts designed to provide containment of the material. Soiled material transport may occur in the same corridor and elevator systems that handle other traffic, however soiled materials are not transported coincidentally on the same elevator with patients, visitors or clean or sterile materials. Provisions shall be provided to allow soiled carts to be adequately washed prior to reuse as a soiled container, and washed and sanitized prior for use for clean materials.

17.2.5.2 Sterile Material. Sterile material to be used in Surgery or Labor and Delivery or other area requiring sound aseptic controls shall be transported from the sterile processing / storage area to its destination via a clean route that will not compromise the integrity of the material. Where case carts are to be used, they shall be transported from sterile storage to the clean surgical core by means that protect the cart, and its contents, from contact with less clean environments.

17.2.6 Palleted Material. Except in warehouses and bulk storage areas, materials shall not normally be moved on pallets beyond the main receiving and storage areas.

17.2.7 Elevator Traffic Separation Guideline (ETSG). Table 17.1 provides a matrix showing general guidelines for the separation of traffic. To use the ETSG, review the "Characteristics" column for the approximate conditions represented by the project. Then review the column represented by the "Facility type" being considered to determine general separation considerations. The most severe separations are to be followed. Each individual facility must be analyzed for unique considerations, however, in general, vertical traffic separation will follow Table 17.1.

17.3 Traffic Flow Rates and Queuing. General circulation rights-of-way, including corridors, staircases and lobbies shall be designed to provide the following general flow and queuing rates.

17.3.1 Corridor Widths. Corridor widths shall be designed to provide average flow volumes through corridors of 3 to 4.5 pedestrians, maximum, per meter (10 to 15 pedestrians (maximum) per foot) width of walkway, per minute.

Table 17.1

ELEVATOR TRAFFIC SEPARATION GUIDELINE
(see previous page for instructions for using this chart)

General Notes:
1. Warehouses shall separate visitor traffic from all other traffic.
2. Where a facility meets characteristics in more than one row, the more severe separation shall be followed.

Facility Type --> / Characteristics	Troop Aid Clinic	Dental or Outpat. Clinic	Research & General Lab Bldgs	Hospital
<4.64K GSM (< 50K GSF) or <50 bed or <15K OP V/A or <3 levels	Combine All	Combine All	Combine All	Combine All
>4.64K & < 9.29K GSM (>50K & <100K GSF) or >50 & <100 beds or >15K & <75K OP V/A or >two levels	NA	Combine All	Combine All	Sep Ped; Comb Pat and Log's Mat's
>9.29K & < 18.58K GSM (>100K & <200K GSF)or or >100 & <150 beds >75K & <150K OP V/A or >three levels	NA	Combine All	Sep Ped; Comb Log & Mat's	Sep Ped; Comb Pat & Log / Mat's
> 18.58K GSM (>200K GSF) or >150 beds or >150K OP V/A or >four levels	NA	Sep Ped Combine Log's and Mat's	Sep Ped; Comb Log and Mat's	Sep Ped; Sep Pat; Sep Log / Mat's

Abbreviation:

NA	- Not Applicable	Comb	- Combined
Ped	- Pedestrian Traffic	Pat	- Patient Traffic
Sep	- Separate (these)	Log	- Logistics Traffic
OP	- Outpatient	Mat's	- Materials Traffic
V/A	- Visits per Annum	<	- Less Than
>	- Greater than or equal	K	- Thousand (,000)
GSM	- Gross square meters	GSF	- Gross square feet

17.3.2 Pedestrian Area Average Pedestrian Area Occupancy (APAO) shall not be less than 1.4 m^2 (15 ft^2) per person in walkways.

17.3.3 Open Lobby Queing Average queuing level for open lobby areas (ingress / egress) points shall approximate 1.2 m^2 (13 ft^2) per person, leaving inter-person spacing of approximately 1.22 m (4 ft).

17.3.4 Informal Queing Informal, unorganized queuing in service areas shall be no less than .93 m^2 (10 ft^2) per person.

17.3.5 Ordered Queing Queuing in ordered queue areas, such as lines at outpatient pharmacy windows and in elevator lobbies, shall be no less than .65 m^2 (7 ft^2) per person.

17.4 Ramps. The use of ramps should be avoided. If used, maximum ramp inclines shall be consistent with the intended use but shall not exceed handicapped accessibility criteria. For routine movement of vehicles, ramps shall be designed to limit required pushing force, including rolling friction, to under 13 kg (29 lb) for distances of under 7.6 m (25 ft), and 10 kg (23 lb) for distances in excess of 7.6 m (25 ft). Where these limits are unattainable, provide a method of mechanical assist such as wheelchair type lift, elevator, etc. Equipment designs shall consider "deadman" activated braking systems for vehicles used on ramps.

17.5 Elevator and Escalator Planning Factors.

17.5.1 Population. The populations to be considered for each building type are as follows:

17.5.1.1 Staff. Staff populations shall be determined for each area within a given facility by actual number, not by FTE equivalents (i.e., two 20 hour per week employees are equal to two staffers, not one FTE).

17.5.1.2 Patient. Patient populations include all persons receiving treatment at the facility. They are categorized as in-patient when they occupy an inpatient bed overnight, and as outpatient when treatment does not require an overnight stay.

17.5.1.3 Visitors. Visitor populations shall be calculated from data supplied by the facility. Visitors shall include all persons not accounted for as staff or as patients, including but not limited to: persons visiting inpatients and accompanying outpatients; persons who are picking up / dropping off specimens or pharmaceuticals or records or X-rays; salespersons; students, outside maintenance people; and others as applicable to the facility in question.

17.5.2 Traffic Patterns, Migration. Each facility shall be reviewed for general circulation and rights-of-way. Where pedestrians have the option of using more than one elevator group, the elevator population predicted for each individual group should be increased by a migration factor of at least 10 percent. Greater factors should be considered for elevators in close proximity to cafeterias, main ingress / egress areas, etc. The design must also consider migration of staff, visitors and patient vehicular traffic to service cars. A factor of at least 10% of the staff should be considered in the service car handling capacity.

17.5.3 Elevator Traffic Study and Analysis (ETSA). The ETSA shall be prepared to determine the appropriate types, locations, sizes, speeds and groupings of elevators. The loading density and the load-unload time for

each facility must be determined for each project during site visits to account for unique conditions at a facility and the cultural aspects of the area (i.e., amount of "personal space" required by individuals; number of visitors per patient; number of escorts or companions accompanying outpatients; etc.).

17.5.3.1 Elevator Loading Densities Maximum estimated densities for elevator loading will approximate: .23 to .325 m^2 (2.5 to 3.5 ft^2) per pedestrian; .42 to .6 m^2 (4.5 to 6.5 ft^2) for a person on crutches / walker; .6 to .79 m^2 (6.5 to 8.5 ft^2) per wheelchair; 1.3 to 1.5 m^2 (14 to 16 ft^2) per gurney; 1.67 to 2.23 m^2 (18 to 24 ft^2) per bed. Loading densities shall be verified during site visits.

17.5.3.2 Elevator Load and Unload Times Estimated average load and unload times, using the elevators as specified herein, will approximate: 2.2 to 2.4 seconds per normal pedestrians in passenger cars; 2.2 to 3.4 seconds per pedestrian impaired by medical / pharmacological treatment; 4.8 to 8.0 seconds for wheelchairs; 4.4 to 9.6 seconds for persons on crutches / walkers; 7.5 to 12.0 seconds for gurneys; 8.8 to 15.0 seconds for beds. Average load and unload times shall be verified during site visits.

17.5.3.3 Elevator Traffic Analysis For passenger and patient service elevators, the elevator traffic analysis shall be based on average high peak traffic conditions over a period of fifteen minutes or less.

17.5.3.4 Passenger Elevators For passenger elevators, the ETSA must evaluate all peak periods, including but not limited to: Morning Shift Change Peak (primarily an up-peak period); Lunch Peak (Heavy two way traffic) and the afternoon shift change peak (primarily a heavy down peak, with moderate opposing traffic). When determining elevator loading, the number of persons / vehicles that can physically load into an elevator must be factored into the traffic study. Loading densities for hospital and outpatient clinic cars are unlike elevator populations in most other buildings. The populations must be studied during site visits to determine the percentage of traffic that is consumed by crutches, braces, wheelchairs, casts, and similar items. Where pedestrian traffic is mixed with substantial vehicular traffic, the space used by carts, gurneys, beds, portable X-Ray equipment, and the like must be factored into the ETSA. Impacts of overlapping traffic patterns between inpatient and outpatient functions must be identified.

17.5.3.5 Patient Service Cars For patient service cars, the primary inpatient transportation period will be evaluated to determine if patient service cars have excess capacity which can augment passenger cars during peak pedestrian periods.

17.5.3.6 Addition/Alteration Projects For Addition/Alteration projects provide specific recommendations on how the addition will augment the existing building systems. Potential migrations from existing buildings, for the purpose of using superior transportation elements in the addition, must be considered in the new building populations.

17.5.3.7 Materials Handling and Logistics Elevators For materials handling and logistics elevators (manual systems) the ETSA shall be based on the materials and cart traffic predicted by the materials management and handling programs plus 20% spare capacity, during the peak hour, for non-

scheduled moves, plus an additional 20% spare capacity to allow for materials handling and materials management program flexibility.

TABLE 17.2

TYPICAL FACILITY
Average Interval Performance Standards
5 Minutes of Heavy 2-Way Traffic

Facility Type	Passenger Cars	Combined Use and Patient Service Cars	Dedicated Materials Cars (Manual Sys.)
Warehouses	< 50 sec	NA	< 60 sec
Troop Aid Cl.	< 45 sec	< 50 sec	< 60 sec
Dental/OP Cl.	< 40 sec	< 45 sec	< 55 sec
Research/Lab	< 45 sec	< 50 sec	< 55 sec
Hospitals	< 35 sec	< 40 sec	< 50 sec

TABLE 17.3
Passenger Handling Capacity
5 Minutes of Heavy 2-Way Traffic

Facility Type	Percent of Elevator Population to be Handled Minimum Acceptable See notes 1 and 2.
Warehouses, stand-alone	11%
Troop Aid Clinic, Stand-alone	12%
Dental / OP, Stand-alone	13%
Research / Lab Bldgs. (Stand-alone)	13%
Hospitals, Medical Centers	15%

Notes for table 17.3

(1) Where combined / integrated with another facility type, the higher facility capacity shall be met.

(2) Where more than one elevator group exists, a 10% (minimum) migration factor should be included for each group.

17.5.4 Escalators. Escalators shall be considered for pedestrian traffic only where justified by traffic studies. Escalators are not subject to analysis or criteria measurements for average intervals. Escalators shall be designed to handle large numbers of pedestrians in a safe and efficient manner. Designs shall consider that traffic will include persons who may be slightly impeded by physical disabilities or by virtue of medical / pharmacological treatment. Escalators shall be designed with safe travel speeds and adequate entrance and exit queuing areas to handle the expected volumes.

17.6 Elevator Performance Criteria. Elevators provide the basic transportation mechanism for most vertical moves in multistory buildings. Selection of the proper number, type, speed, location and general characteristics for elevators is crucial to an efficient and effective transportation system. Provide the minimum number of elevators necessary that will satisfy this criteria:

17.6.1 Average Interval. Table 17.2 provides requirements for average interval.

17.6.2 Passenger Handling Capacity. Where the exact peak traffic conditions cannot be obtained or calculated for a given facility, Table 17.3 may be used.

17.6.3 Patient Service Handling Capacity: The 5 minute peak handling capacity for patient service cars, not including materials or logistics traffic, shall be calculated as follows:

Total Moves / Day x 18.2% = Peak Hour Moves
Peak Hour Moves / 12 = Average 5 Minutes
Average 5 Minutes x 1.25 = Peak 5 Minute Handling Capacity
The ETSA must detail these moves.

17.6.4 Other Service Traffic Other Service Traffic (Materials, housekeeping, construction and maintenance traffic). Peaks for these traffic types shall be calculated in 15 minute intervals, with an allowance of a five minute peak representing 40% of the peak 15 minute total. Studies shall be based on the actual total number of materials handling, logistics and housekeeping moves estimated by the materials handling analysis and the materials management report, plus 40% allowance for unscheduled moves and for future schedule flexibility, plus 4% allowance for construction and maintenance traffic.

17.6.5 Average Maximum Ride Time (AMRT). Table 17.4 lists the allowable AMRT.

TABLE 17.4
Average Maximum Ride Time

Facility Type	Average maximum Ride Time
Warehouses	< 120 sec, all traffic
Troop Aid Station	< 90 sec, all traffic
Clinic (stand alone)	< 90 sec, all traffic
Research / Lab Bldgs.	< 90 sec, all traffic
Hospitals, Medical Centers	< 90 sec, passenger and patient elevators.
	< 120 sec, logistics elevators

17.7 Elevator Design Considerations.

17.7.1 Codes. Elevators shall be designed in accordance with all applicable federal, state and local codes, including ASME/ANSI A17.1, .2, .3 and .5 (reference 17a, 17b, 17c, and 17d). This includes designing to the appropriate rating / load classification for the intended application. Elevators shall be designed to meet all handicapped provisions applicable to the project.

17.7.2 Elevator Types. Elevator types and speeds shall comply with Table 17.5. Higher speeds may be used if needed to satisfy traffic demands. Elevator selections will not exceed the elevator rise criteria given in Table 17.5. Hydraulic elevators may be used where the total rise is less than 13.7 m (45 ft) and the peak hourly number of up (direction) starts is under fifty (50).

Table 17.5

Elevator Types and Speeds

Elevator Rise		Speed m/s (FPM), FLU/NLD, by Elevator Type		
Story	Height m (ft)	Hydraulic	Geared	Gearless
1	≤ 4.57 (15)	.381 (75)	N/A	N/A
1 - 3	4.57-13.7 (15 - 45)	.635 (125)	N/A	N/A
4 - 7	≤ 27.43 (90)	N/A	1.016 (200) 1.778 (350)	2.54 (500)
7 - 17	27.43-54.86 (90-180)	N/A	1.778 (350)	2.54 (500) 3.56 (700)
> 17	> 54.86 > (180)	N/A	*	*

* Consider separate high rise and low rise groups of passenger cars
FLU/NLD - full load up, no load down

17.7.3 Elevator Location and Travel Distances.

17.7.3.1 Passenger and Combined Use Elevators Passenger and combined use elevators shall be planned to provide a maximum walking distance of 61 m (200 ft). A distance of 46 m (150 ft) is preferred.

17.7.3.2 Service Elevators Service elevators shall be planned to provide a maximum walking distance of 61 m (200 ft) for users on patient floors. A distance of 52 m (170 ft) is preferred.

17.7.3.3 Added Elevators Where added elevators are provided solely for the purpose of meeting the distances noted above, and where they do not provide primary elevator service to main lobbies and main building ingress / egress points, they are exempted from the standard average interval and handling capacity criteria and shall provide average intervals of under 55 seconds and shall provide a handling capacity equal to 7.5% of the population within the area of service provided. Cars added for this purpose shall be service configured.

17.7.3.4 Materials Handling and Logistics Elevators Materials handling and logistics elevators shall be planned to provide service as close to the user areas as practical. Primary horizontal circulation should be on one level where possible. Maximum distances for travel from the elevators to materials storage areas shall not exceed 53 m (175 ft) on inpatient

floors, and 61 m (200 ft) for all others, except for the primary horizontal circulation floor where no limit is dictated.

17.7.3.5 Elevators shall be located so that visitors do not normally pass service or materials cars enroute to passenger cars, unless those service cars are substantially hidden from view.

17.7.4 Elevator Lobbies and Groupings.

17.7.4.1 Where two or more cars are required within a group, cars should be placed in opposite banks, opening into a common lobby.

17.7.4.2 Service and combined use cars should not be placed more than three (3) in a row, passenger cars not more than four (4) in a row as shown in Figures 1 and 2 below.

```
 _____________________________
| ok  | ok  | ok  | NO  |
|  1  |  2  |  3  |  4  |
|     |     |     |     |
|_____|_____|_____|_____|
          lobby
 _____________________________
```

Figure 17.1: Service Cars - in line

```
 _____________________________________
| ok  | ok  | ok  | ok  | NO  |
|  1  |  2  |  3  |  4  |  5  |
|     |     |     |     |     |
|_____|_____|_____|_____|_____|
          lobby
 _____________________________________
```

Figure 17.2: Passenger Cars - in line

17.7.4.3 If more than six service cars, or eight passenger cars are required in one group, two smaller more strategic groups should be provided.

17.7.4.4 Adjacent car entrances shall be placed either in straight lines or at 180 degree angles to each other as shown in Figures 3 and 4.

```
 _____________________
|     |     |     |
|     |     |     |
|     |     |     |
|_____|_____|_____|
      lobby
 _____________________
```

Figure 17.3: Adjacent Entrances - in line

```
_____________________
|     |     |     |
|     |     |     |
|     |     |     |
|__|__|__|__|__|__|
|
|     lobby
|____________________
|  |  |  |  |  |  |
|     |     |     |
|     |     |     |
|_____|_____|_____|
```

Figure 17.4: Adjacent Entrances - 180 degrees (opposing)

17.7.4.5 Elevator ingress / egress should be from a distinct dead end elevator lobby as shown in Figure 5 and not directly from a corridor. Minimum / maximum lobbies for service cars are: 3.66 to 4.27 m (12 to 14 ft) when opening opposes a wall; 4.27 to 4.88 m (14 to 16 ft) when the opening opposes another elevator. Minimum / maximum lobbies for passenger cars are: 3.05 to 3.66 m (10 to 12 ft) when the opening opposes a wall; 3.66 to 4.27 m (12 to 14 ft) when the opening opposes another elevator. Where elevators are accessed from corridors, as shown in Figure 6, they shall be located on one side of the corridor only (maximum of three cars), and shall be setback: 2.44 m (8 ft) for service and combined use cars; and 1.22 m (4 ft) for passenger cars.

```
_____________________        |
|     |     |     |        |
|     |     |     |     C  |
|     |     |     |     O  |
|__|__|__|__|__|__|     R  |
|                        R  |
|     dead end lobby     I  |
|____________________    D  |
|  |  |  |  |  |  |     O  |
|     |     |     |     R  |
|     |     |     |        |
|_____|_____|_____|        |
```

Figure 17.5: Elevator with Dead End Lobby

```
_____________________
|     |     |     |
|     |     |     |
|     |     |     |
|__|__|__|__|__|__|
|     lobby       |
_______|          |_______
       corridor

_________________________________
```

Figure 17.6: Elevator Setback

17.7.4.6 Passenger and service cars shall not share the same lobby.

17.7.4.7 Where two, or more elevator group lobbies are adjacent, walls or other building features shall be provided to prevent a free flow of traffic between those lobbies (to minimize one user from placing calls to both groups).

17.7.4.8 Elevator lobbies generate noise and will be acoustically isolated from critical care areas.

17.7.4.9 Elevator equipment rooms shall be electrically isolated from all rooms containing sensitive electronic equipment such as computer rooms, ORs or ICUs.

17.8 Materials Handling and Management Systems Considerations.

17.8.1 Adjacency Considerations and Handling Considerations. Table 17.6 provides a guideline for adjacencies of materials management areas and functions.

17.8.2 Materials Handling System Alternative Matrix. The specific systems included in a project shall be determined by detailed physical, functional and economic (including life cycle cost) studies. As a minimum, the systems noted on Table 17.6 shall be considered.

17.8.3 Manual Bulk Handling Systems. Manual systems shall be used where semi, or fully automated systems cannot be physically and economically (LCC) justified. Manual tasks such as pushing, pulling and carrying shall consider safety and human engineering factors. Designs should use general ergonometric standards applicable to "industrial women". Additional criteria for study / application of manual systems include:

17.8.3.1 The design shall limit the sustained effort to move loaded carts to 10.43 kg (23 lb) pushing force where distances exceed 30.5 m (100 ft), on hard level surfaces. Initial forces required to initiate movement shall not exceed 22.68 kg (50 lb).

17.8.3.2 Movement Speeds. The following movement speeds will be used when studying manual and automated alternates: Walking unencumbered, through generally open corridor spaces - 1.32 m/s (260 FPM); Walking while carrying tote box or medium sized parcel under 11.34 kg (25 lb) - 1.07 m/s (210 FPM); Pushing cart through substantially straight and open areas - .89 m/s (175 FPM); Pushing cart through areas that are congested, or where substantial numbers of turns are involved - .46 to .686 m/s (90 to 135 FPM), or as recommended by the MTC based on restrictions of the location.

17.8.4 Semi-Automatic Bulk Handling Systems:

17.8.4.1 Elevators - refer to paragraphs above.

17.8.4.2 Gravity Chutes. Chute access on user levels shall be through a separate room with dimensions adequate for holding the collection cart, with room doors closed, while the attendant is charging the chute. Where both laundry and trash chutes are used, each shall be in a separate and clearly marked room. Terminal rooms shall be sized to accumulate the amount of materials dictated by the waste management study. Minimum dimension shall allow accumulation of twenty four hours of collected materials. Design shall ensure that collected material does not block the entrance door or hinder the pickup operation.

TABLE 17.6
MATERIALS HANDLING SYSTEM ALTERNATIVE MATRIX

General Note:
1. Warehouses shall be studied for applicable equipment and for extensions of systems from adjacent facilities.
2. Other systems may be studied where appropriate.

Facility Type --> Characteristics V	Troop Aid Clinic	Dental or Outpat. Clinic	Research & General Lab Bldgs	Hospital
<4.64K GSM (50K GSF) or <50 bed or <15K OP V/A or <3 levels	ALTNR: MAN	ALTNR: MAN	ALTNR: MAN;DW	ALTNR: MAN;DW
>4.64K GSM & < 9.29K GSM (50 & <100K GSF) or >50 & <100 beds or >15k & <75K OP V/A or >two levels	NA	ALTNR:MAN DW	ALTNR:MAN DW;PT	2ALTR:MAN DW;PT;GC
>9.29K GSM & < 18.58K GSM (100K & < 200K GSF) or >100 &<150 beds or >75K &<150K OP V/A or >three levels	NA	2ALTR:MAN DW;PT	2ALTR:MAN DW;PT;ABC	3ALTR:MAN DW;PT;CL ABC;GC
>18.58K GSM & < 32.52K GSM (200 K & < 350K GSF) or >150 &<250 bed or >150K&<300K OP V/A or >four levels	NA	2ALTR:MAN DW;PT;CL ABC;GC	2ALTR:MAN DW;PT;CL ABC;GC	3ALTR:MAN DW;PT;CL ABC;GC PnTL
> 32.58K GSM (350K GSF) or >250 beds or >300K OP V/A >six levels	NA	3ALTR:MAN DW;PT;CL ABC;GC; PnTL; AGVS	3ALTR:MAN DW;PT;CL ABC;GC; PnTL; AGVS	3ALTR:MAN DW;PT;CL ABC;GC; PnTL; AGVS

Abbreviations:

ABC - Auto Box Conveyor
ALTNR - No Study required
2ALTR - Study 2 Alternates
3ALTR - Study 3 Alternates
CL - Cart Lift, Automated
PnTL - Pneum. Trash and Linen
> - greater than or equal to
GSM - Gross squage meter
DW - Dumbwaiter, Manual load/unload
GC - Gravity Chutes
MAN - Manual
NA - Not Applicable
PT - Pneum. Trans. Tube inject / eject
< - less than
GSF - Gross square feet
AGVS - Automated Guided Vehicle

17.8.4.3 Dumbwaiters, Counter Height. Automatic loading and unloading shall be considered. Dumbwaiters, without automated devices, shall have powered or manual doors. Powered doors shall be vertical lift type and have upper or lower safety edges.

17.8.4.4 Dumbwaiters, Floor Loading. Automatic loading and unloading shall be considered. Floor loading dumbwaiters shall have powered vertical lift biparting doors with both upper and lower safety edges.

17.8.4.5 Cartlifts. (with automated transfer devices). Doors shall be power operated with upper and lower safety edges. Maximum cartlift capacity shall be 454 kg (1000 lb).

17.8.4.6 AGVS Vertical Automation (AGVSVA). Systems designed for vertical-only transportation of materials on carts shall use elevators, guidepath, and other devices, as applicable. Designs shall consider future upgrade to allow horizontal travel.

17.8.5 Automated Horizontal and Vertical Bulk Handling Systems. Automated cart transportation systems may be used where LCC justified for horizontal and vertical transportation of materials.

17.8.5.1 Automated Guided Vehicle Systems (AGVS). AGVS shall be an integrated turnkey automated cart transportation system. The AGVS systems shall be designed to incorporate the latest state of the art in proven technology but systems not proven in previous application shall be avoided. AGVS may utilize a variety of transportation vehicles including "cart carrying" type, forklift type, tow type, and Automated Storage and Retrieval System (ASRS) type.

17.8.5.2 Other Automated Vertical and Horizontal Cart transportation systems may be reviewed where applicable and cost effective for a given project.

17.8.5.3 Pneumatic Trash / Linen shall be fully pneumatic, gravity pneumatic or multiloading. Hybrid systems are permitted where required. Regardless of the system type selected, no station shall be designed that is "up-send" in nature. All materials must travel in the down direction after first being loaded into the system. System traffic capabilities shall be verified by detailed traffic studies. Systems must comply with NFPA 82 (reference 17e).

17.8.6 Unit Handling Systems.

17.8.6.1 Manual Systems. Manual systems shall be used where semi, or fully automated systems cannot be functionally, physically or economically (LCC) justified.

17.8.6.2 Pneumatic Tubes. Pneumatic tube systems may be provided where economically justified. Systems shall be designed to reach individual project peak traffic requirements, plus a minimum spare capacity of 20%. Designs shall provide for soft handling of all systems where laboratory specimens and other delicate items are transmitted.

17.8.6.3 Automated Box Conveyors (ABC). ABC systems may be provided when economically (LCC) justified. Systems shall be designed to serve peak traffic requirements plus a minimum spare capacity of 35%.

REFERENCES.

17a. ASME/ANSI A17.1, "Safety Code for Elevators and Escalators".

17b. ASME/ANSI A17.2.1, A17.2.2, A17.2.3, "Inspectors Manuals".

17c. ASME/ANSI A17.3, "Safety Code for Existing Elevators and Escalators".

17d. ASME/ANSI A17.5, "Elevator and Escalator Electrical Equipment".

17e. NFPA 82, "Standard on Incinerators and Waste and Linen Handling Systems and Equipment".

SECTION 18: WASTE MANAGEMENT

18.1 Introduction. This section addresses the waste generated at facilities, and establishes design guidance for the collection, transportation, holding, disposal, and treatment of these wastes. Wastes not addressed by this section include asbestos, nuclear, and water-borne (sanitary) wastes. This section discusses, but does not provide complete facility design guidance for, soiled reprocessable materials, such as linens, uniforms, etc.

18.1.1 Regulations, Codes, and Standards. The design of the waste management system shall be in accordance with the Federal regulations listed in the references (18a through 18g) at the end of this section. In addition, the design shall be in accordance with State and local government regulations. Guidelines and advisory standards available from the National Fire Protection Agency (NFPA), the Centers for Disease Control (CDC), National Institute for Occupational Safety and Health, (NIOSH), Department of Health and Human Services (HHS), and the Joint Commission on Accreditation of Healthcare Organizations (JCAHO), shall be utilized as applicable and considered minimum criteria for facility design. Specific publications of these agencies are cited periodically throughout this text to emphasize applicability.

18.1.2 Waste Categories. Each of the several categories of medical facility waste requires individual design consideration of handling, storage, and disposal by the facility. In addition, regulatory requirements differ for each category, dependant upon the relative personnel and public hazards and environmental impact.

18.1.2.1 Non-regulated Medical Waste (NRMW). This waste category includes those wastes not classified as Regulated Medical Waste (RMW), Recyclable Materials (RM), or Hazardous Waste (HW). NRMW normally constitutes no special danger of infection or injury to personnel or the general public.

18.1.2.2 Regulated Medical Waste (RMW). RMW is waste which poses danger of disease transmission and/or objectionable appearances to the public and handling personnel, and includes the following, as defined by reference 18a:

a) Cultures/Stocks of Infectious Agents;
b) Pathological Wastes;
c) Human Blood and Blood Products;
d) Used Sharp implements;
e) Contaminated Animal Wastes and Bedding;
f) Isolation Waste from Patients with Highly Communicable Diseases;
g) Unused sharp implements;
h) Other Wastes mixed in with the above.

18.1.2.3 Recyclable Materials (RM). RM are those used materials which can be reused, either for the same purpose as the original material or, following processing, in a different form or for a different purpose. RM normally constituted no special danger of infection or injury to personnel or the general public.

18.1.2.4 Hazardous Waste (HW). HW is defined by the Resource Conservation and Recovery Act, Subpart C (and categories not de-listed at Subpart D), contained at 42 USC 6973, 40 CFR 261-265 (reference 18b), and

constitutes wastes having ignitable, corrosive, reactive, or toxic characteristics.

18.2 General Design Requirements. The proper design of a medical facility waste management and handling system requires consideration of the operational and mission characteristics of the facilities, the existing waste disposal practices of the facility or base/post, the governmental regulations affecting the design, and the costs and application of system handling and disposal technologies. It is the designer's responsibility to identify the characteristics and volumes of facility-generated wastes and to design the facilities necessary for collection, holding, segregation, and ultimate disposal of the wastes. The waste management system shall be designed to help maintain aseptic environments in the hospital, and to minimize or eliminate physical and infection hazards to patients, hospital staff, and the general public, at the lowest reasonable cost to the government.

18.2.1 The Waste Management Study (WMS). A WMS shall be executed for each facility design. The study shall constitute the design project documentation of all considerations and conclusions of the waste system design. In addition to a narrative description of the proposed waste management methodology, the study shall include the following:

(a) Determination of the waste stream components and soiled linen types.
(b) Estimation of waste and soiled linen volumes.
(c) Concepts for segregation, holding at the generating departments and central bulk holding.
(d) Space and utility requirements for departmental holding rooms.
(e) Concepts for the collection and transportation of the waste and soiled materials through the facility.
(f) Soiled dock arrangement, layout, and equipment.
(g) Waste Management Center (WMC) space, layout, equipment, and support utility requirements.
(h) Concepts for the disposal of each waste category.
(i) Life Cycle Costing (LCC) Studies for RMW processing equipment.

18.3 Waste Management System Facility Space Requirements.

18.3.1 Departmental Solid Waste Holding. Each category of waste, and soiled materials, shall be held separately from clean materials and segregated to prevent cross-contamination. The design shall determine the space requirements for holding areas at the generating department level. Space requirements for holding rooms shall take into account the necessary space for personnel and cart circulation, the categories and volumes of wastes and soiled materials generated on the individual departmental basis, and the schedule of removal.

18.3.1.2 RM Segregation. RM shall be segregated at the generating source. Appropriate space for RM holding containers in patient rooms, clinical unit nursing stations, offices, ancillary areas and support departments is required.

18.3.1.3 Collection Schedule. Design of the waste and soiled linen systems shall be based upon the completion of all collection tasks within one (1) working shift of eight (8) hours for offices, clinics and ancillary areas, unless other schedule is justified by analysis in

conjunction with the Transportation Study addressed at Chapter 17 of this manual.

18.3.1.4 Typical Nursing Unit Soiled Utility Room. For the general 28 to 36 bed nursing units, a typical soiled utility room will require approximately 18.6 net m^2 (200 net ft^2) in floor area. This typical soiled utility room is shown at Figure 18-1.

18.3.2 Waste Management Center. For hospitals, medical centers, and other facilities generating significant volumes of RMW and/or HW, a centralized Waste Management Center (WMC) should be provided for the facility. The WMC is designed for bulk waste and soiled materials holding and dispatch, and for RMW processing. Provision of a central WMC helps to ensure necessary control over facility waste, and facilitates future changes in waste compositions and volumes which impact space requirements. Bulk holding in the WMC is normally provided for NRMW, RMW, RM, and soiled linen.

18.3.2.1 Holding Capacity. A minimum of three (3) days holding capacity for all waste/soiled materials shall be provided in the WMC, to provide for operational contingencies, such as holiday weekends. Remote facilities, or those with special mission requirements, may require greater holding capacity. Special requirements applicable to HW are addressed elsewhere in this manual.

18.3.2.2 Staff/Administration Space. WMC staff and administrative facilities will be required within or proximate to the WMC.

18.3.2.3 Clean Cart Holding. Holding space shall be provided in the WMC for clean cart holding. Space requirements will be determined in coordination with the Transport Study, which will identify the number and frequency of use of the various cart types. A minimum holding of one (1) hour is required for each separate cart type.

18.3.2.4 Soiled Cart Holding and Cleaning. Space shall be provided in the WMC for soiled cart holding, segregated from holding space for clean carts or materials. A cart cleaning station shall also be provided at the WMC, consisting of an automated cart washer or steam gun in a manual cart wash room.

18.3.2.5 Secured Holding. Secured holding with restricted access, designed to meet the requirements of the Resource Conservation and Recovery Act (reference 18a) should be provided for HW. Similarly, a separate secured holding area should be provided for RMW.

18.3.2.6 Emergency Shower and Eyewash. An overhead shower and eye wash station should be provided for employee use in the WMC in the event of contamination by HW or RMW.

18.3.2.7 RMW Processing Equipment. On-site RMW processing equipment is normally located in the WMC.

FIGURE 18-1

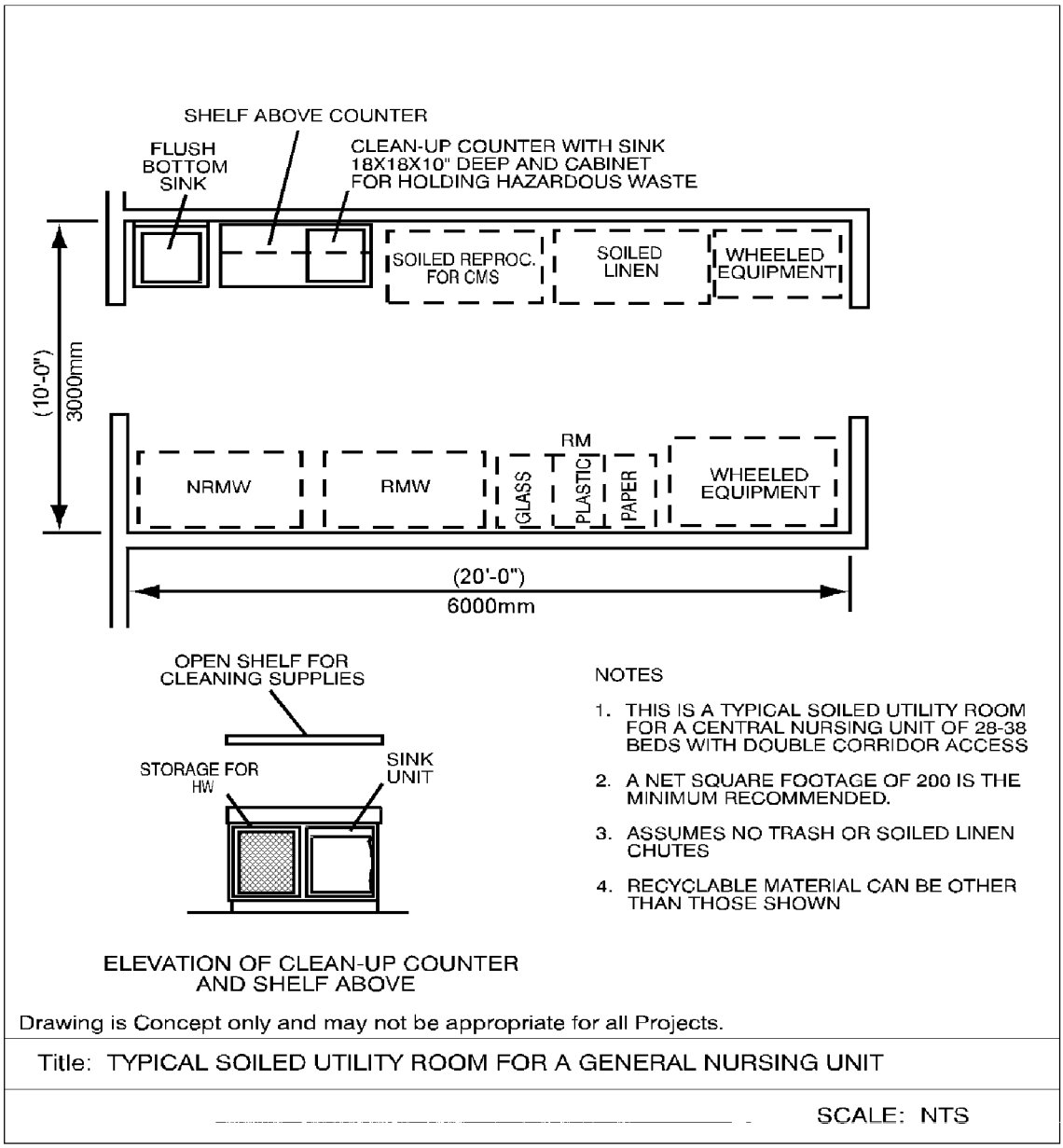

PLANNING DETAILS

18.3.3 Soiled Dock Design. Soiled docks shall not used for clean materials receiving or dispatch. The required number of soiled docks shall be determined for each facility. However, the following minimum soiled dock positions are required:

a) One (1) dock position for dispatch of soiled linen, RMW (off-site treated), RM, and HW,
b) One (1) position for the NRMW compactor or roll-off container.
c) One (1) position for the container for treated RMW.
d) One (1) salvage/large item dumpster at or near the soiled dock.

18.3.3.1 Dimensions and Arrangement. The dock height, depth and apron are determined by the WMS, based upon such considerations as soiled dock activities, truck types and dimensions, and cart and personnel movement and circulation.

18.3.3.2 Personnel Access. Appropriate stairs and ramps shall be required to facilitate personnel movement, including accessibility requirements (see Section 12), between the dock and the ground level.

18.3.3.3 Weather Protection. In locations of intemperate climate, ie., high wind, or temperature extremes, enclosed docks are required. In other areas where an outside dock is adequate, a protective canopy shall be provided to shield personnel and materials from rain or snow.

18.4 Waste Collection and Transport. The waste management design shall be fully coordinated with the transportation design to determine the most appropriate means and routing of transport of wastes within the facility. Automatic or manual systems may be considered. The design shall avoid creating conditions which require or involve the double handling of waste, especially RMW and HW.

18.4.1 Vertical Collection Systems. The extent of use of vertical collection for the movement of soiled linens and NRMW shall be determined in coordination with the transportation design, addressed in Section 19. Vertical collection elements include:

a) Gravity Chutes;
b) Pneumatic Chutes;
c) Conveyors and
d) Elevators.

18.4.2 Restricted Movement Routes. Hospital wastes and soiled materials movement routes shall be designed to avoid public areas and contact with patients.

18.4.3 Containment and Labeling. HW and RMW will be collected in enclosed, leak-proof containers (or bags), properly labeled to identify the nature of the materials. Management of HW shall comply with the RCRA.

18.4.4 Restricted Transport Systems. Chute systems shall not be used for RMW, RM, and HW: these wastes are moved by cart. Liquid borne shredded-waste (NRMW), and institutional vacuum systems, are not recommended.

18.4.5 Manual Collection Methods. Manual collection of waste and soiled materials is generally accomplished by cart. The cart design should be compatible with automatic cart dumping, cart washing and RMW

processing equipment (if utilized). Additional guidance for the design of waste transport systems and methodology is provided at Section 19.

18.5 NRMW Processing and Disposal. The design shall coordinate processing and disposal of NRMW with the existing procedures of the base/post. Waste compaction and incineration should be considered to determine cost feasibility.

18.5.1 Automatic Cart Dumper. If NRMW is delivered to the WMC by cart, an automatic cart dumper should be provided to transfer the waste into the holding container or compactor.

18.5.2 Collection Hopper(s). For systems utilizing chutes for transport of NRMW to the WMC, collection hoppers should be provided to load the waste automatically into the holding container or compactor.

18.5.3 Compaction. Compaction is used in conjunction with roll-off containers and the equipment must be compatible with the soiled dock design. Where a separate compactor and container system arrangement is planned, under-dock installations should be used. Compactor location must be compatible with the dock traffic patterns, transporter access, and suitable for physical protection. Compacted NRMW is normally disposed of off-site.

18.5.4 Incineration. Incineration provides the greatest waste volume reduction and sterilization of waste product. However, it is increasingly difficult to obtain operating permits for incinerators, and the rapid rate of change in governmental pollution regulations creates the possibility of future prohibition of incinerator operation. With these considerations, and the high associated capital and operating costs, new on-site incinerators will be infrequently provide for NRMW processing. However, if governmental regulations (including State and local) are found to be favorable, on-site incineration should be considered by LCCA.

18.5.4.1 Scope of Incinerator Study. LCCA of incinerator utilization should consider also disposal of RMW and selected HW (in accordance with reference 18b), and utilization of the incinerator as part of the heating plant.

18.5.3.3 Automatic Incinerator Waste Feed. Incinerators with capacities over 350 pounds/hour shall be equipped with automatic-feed waste loading.

18.5.3.4 Additional Design Considerations. On-site incinerator design and location considerations include, but are not limited to, the following:

(a) The waste composition being fed into the incinerator.
(b) Enclosure of the incinerator area. Incinerators located within buildings will be provided with adequate combustion air provisions.
(c) Incinerator capacity must be based upon processing the total daily waste volume within a 6 hour maximum burning period (which allows sufficient start-up and cool-down during one 8 hour shift).
(d) Incinerators and stacks shall meet the most stringent requirements of Federal, State, and local government regulations.
(e) Stack location in relation to outside air intakes, doorways, windows, or those of other nearby facilities,

shall be analyzed using accepted engineering methods.

18.5.4 Waste Grinders. Grinders should be provided in Food Service areas, including dish washing, pots/pans washing and food preparation areas. Grinder size will be based upon the maximum number of meals possible at full occupancy. Grinders shall not be used in Obstetrical Suites.

18.5.5 Pulping and Shredding Systems. A pulping/shredding system is normally provided for Food Service Department waste. Food Service waste includes food preparation waste, packing materials, tray scrapings, paper and plastic plates and containers, trays and utensils, not economically or practically processable as RW. Pulped waste shall not be piped to a remote disposal location, but pulped directly into containers visible to the pulping machine operator. Central systems for general facility NRMW are not normally provided, but may be considered for Using Military Department approval if cost justified.

18.6 RMW Processing. Selection of a treatment or disposal process for a particular requires careful consideration of current installation practices (as applicable), Federal, State, and Local governmental regulations, and the relative costs, operational complexities, and legal implications associated with the available disposal options.

18.6.1 Landfill Acceptance of RMW. The designer shall verify that the community landfill(s) will accept RMW, whether treated or in untreated form, and any requirements for its acceptance.

18.6.2 Off-site Disposal/Treatment Considerations. The Environmental Protection Agency's Medical Waste Tracking Act (MWTA) (reference 18a), while presently expired, introduced a system imposing extensive responsibilities on RMW generators (i.e., hospitals) for the ultimate disposal of RMW, whether by the facility itself or by independent hauling and treatment contractors. It should be anticipated that the majority of State governments have or will institute regulations at least as stringent as the MWTA. In addition to the legal liability implications of waste tracking legislation, the costs and operational complexities associated with contracted disposal will be significant, requiring consideration in cost analysis comparisons with on-site treatment methods.

18.6.2.1 Pathological Waste Disposal. Where other procedures for disposal of human or animal body parts are not feasible or cost effective, off-site pathological waste disposal (incineration or burial) by outside contract with mortician or veterinarian should be considered.

18.6.3 General On-site Treatment Considerations. On-site treatment of RMW is desirable to reduce the potential liability associated with transport of potentially infectious materials and increasingly higher costs for contracted transport and disposal of untreated RMW. Acceptable treatment methods are as defined by the MTWA, requiring waste "treatment and destruction", and renderment to unrecognizability (normally accomplished by shredding or grinding). The treatment process is required to destroy the potential of the waste to cause adverse human health effects, to pose physical hazards, or to aesthetically degrade the environment.

18.6.4 Treatment Method Selection Guidance. There are significant comparative advantages and disadvantages for each of the RMW treatment currently available in the industry. Waste management and handling regulations have currently not stabilized to the point that a single

treatment technique can be recommended to meet the needs of all projects. Table 18.1 outlines technologies which are currently considered effective for on-site RMW treatment. Note that processes used by centralized or commercial facilities, such as irradiation and thermal inactivation treatments for large volumes of liquid and solid RMW, are not presented here.

18.6.4.1 Shredding and Grinding Equipment. In and of themselves, shredding or grinding processes do not constitute treatment methods. Shredding or grinding equipment must be used in a manner which does not introduce aerosolized untreated RMW into the air, and complies with OSHA and EPA regulations for employee health and safety.

18.6.5 Retort Steam Sterilization. Retort steam sterilization is a common method of treating RMW by use of saturated steam under pressure to accomplish the complete destruction of all microorganisms. Use of a retort steam sterilizer, in concert with a grinder for rendering the treated RMW "unrecognizable", makes this process viable in the anticipated regulatory climate. Grinding should be done following sterilization, in conjunction with a compactor or container located at the soiled dock.

18.6.5.1 Limitations of Method. Aesthetic considerations, and the dense nature of human and animal body parts which preclude thorough steam penetration, make sterilization ineffective for this application. Similarly, sterilization cannot be effectively utilized for large volumes of liquids, or animal bedding.

18.6.5.2 Sterilizer Type. Vacuum sterilizers process RMW more effectively, and in less time, than gravity displacement units, and should be utilized for this application.

18.6.5.3 Mechanical Cart Dumper. Systems which employ a mechanical cart dumper to transfer bagged RMW from the holding cart to the sterilizing cart, or use the same cart for collecting, holding and sterilizing RMW, should be utilized to reduce the potential for injury or contamination of waste handling personnel.

18.6.6 Incineration. Incineration was a primary method used to treat and destroy RMW in past years when the plastics content of the waste was low. Higher air quality standards and increased public concerns regarding air emissions have resulted in difficulties with permitting and operation of incinerators, as well as increasing capital and operational costs substantially. Nevertheless, the advantages of incineration in effectively destroying all RMW materials, particularly pathological and animal waste, and in reducing the waste to the minimum volume (ash), dictate consideration of this process for each design.

18.6.7 Microwaving. Microwaving of RMW is accomplished by a technique which shreds the waste and uses magnetrons, or microwave generators, to produce heat. Microwaving is not suitable for treatment of large pathological wastes, such as body parts and animal wastes. In addition, the technology is currently restricted to treatment of RMW which is less than 10% liquid content by total weight, and metallic content of less than 1% by total weight (with no piece of metal exceeding a weight of 0.5 lb). Advantages of microwaving systems are their effective destruction of RMW and reduction of waste volume by 80 percent.

18.6.8 Chemical Disinfection. Chemical disinfection of RMW is generally accomplished by a technique which uses shredding and a sodium hypochlorite solution to chemically alter and destroy microorganisms.

Shredding occurs within the unit, therefore precluding the need for a separate shredding or grinding device. Chemical disinfection is not suitable for treatment of large pathological wastes, such as body parts and animal waste. This technology will typically reduce waste volume by 80 percent.

18.6.9 Liquid RMW Disposal. Discharge to the sanitary sewer is a common practice for disposal for liquid RMW, such as blood and suction fluids. This practice should specifically be reviewed for code acceptability at the time the medical facility is expected to be operational.

18.6.10 New RMW Treatment Technology. Any "new" treatment technologies considered for utilization in facilities shall be acceptable by the regulating authority, have scientific evidence of efficacy, and shall have been successfully in use in similar applications for a minimum of two years.

8.7 Special Requirements for Hazardous Waste. All HW must be contained, identified, stored, and disposed of in accordance with reference 18b.

18.7.1 Holding (Accumulation) Quantities. The volume of HW which a facility may hold is determined by the "Generator Status" of the facility, as defined by the EPA. More stringent State or Local regulations may apply.

18.7.1.1 Large Quantity Generators. Large Quantity Generators produce over 1,000 kg (2,200 lb) of HW per month, or five and a half (5.5) 55 gallon drums. Additionally, if more than 1.1 kg/month (2.5 lb/month) of any "acutely hazardous waste" is generated, the facility is classified under this category. HW storage can not be longer than 90 days from the accumulation start date (normally when the container is full), without a permit. A Large Quantity Generator can have multiple satellite accumulation points at the work place for one (1) container, up to the maximum size of a 55 gallon drum.

18.7.1.2 Small Quantity Generators. Small Quantity Generators produce from 100 - 1000 kg (220 - 2,200 lb) per month. HW storage can not be longer than 180 days from the accumulation start date (normally when the container is full), without a permit. If the disposal facility is located more than 322 km (200 mi) away, HW can be accumulated for 270 days.

18.7.1.3 Conditionally Exempt Small Quantity Generators. Conditionally Exempt Small Quantity Generators produce less than 100 kg (220 lb) of HW/month.

18.7.2 HW Container Requirements. HW must be placed into compatible containers which are sealed at all times except when additional amounts of HW are being introduced. HW containers shall be properly labeled. Stacking of HW containers is allowed only if adequate means are provided to prevent spills or damage to the containers: appropriate secondary containment capability is required.

TECHNIQUES FOR TREATMENT OF RMW

Types Of RMW	Retort Steril-zation	Incin-eration	Micro-wave	Chemical Disin-fection	Other
Isolation wastes	X	X	X	X	
Cultures & stocks of infectious agents & associated biologicals	X	X	X	X	
Human blood & blood products	X	X	X/4	X	X/1
Pathological wasts	X/2	X			X/3
Used/Unused sharps	X	X	X/4	X	
Contaminated animal carcasses, body parts, bedding		X			
Other wastes mixed in with RMW	X	X	X	X	

/1 Discharge to sanitary sewer for treatment in municipal sewerage system)provided that secondary treatment is available).

/2 For aesthetic reasons, steam sterilization should be followed by incineration of the treated waste or by grinding with subsequent flushing to the sewer system, in accordance with National, State and Community regulations.

/3 Handling by a mortician (burial or cremation).

/4 Limited to 10% moisture by weight and 1% metallic content by weight.

TABLE 18-1

REFERENCES:

18a Environmental Protection Agency (EPA) Regulation 40 CFR 261-265 implementing the Resource Conservation and Recovery Act (RCRA), 42 USC 6973.

18b EPA Regulation 40 CFR Parts 22 and 259, the Medical Waste Tracking Act.

18cDepartment of Transportation (DOT) Regulation 49 CFR 171-181, Hazardous Materials Transportation.

18d DOT Regulation 49 CFR 173.386, The Etiologic Waste Act (EWA).

18e Occupational Health and Safety Administration (OSHA) Regulation 29 CFR 1910.1200.

18f OSHA Regulation 29 CFR 1910.134.

18g OSHA Regulation 29 CFR 1910.1030.

BLANK PAGE

SECTION 19: INTEGRATED BUILDING SYSTEMS

19.1 General. This section provides guidance for the use of Integrated Building Systems (IBS) concepts in the design of facilities. Many of the concepts associated with IBS also apply to the design of conventional facilities. IBS facilities use modular structural systems, conventional construction materials, vertical and horizontal zoning of utility distribution systems, standard equipment, and standard building trade practices. For a more detailed presentation of the IBS concepts, refer to the Military Department Criteria.

19.1.1 Purpose. The purpose of IBS design is to provide highly flexible facilities which are economical to construct and to subsequently operate, maintain and modify. Inherent in IBS design for medical facilities is the separation of maintenance staff from medical staff, and patients, to preclude undesired cross traffic and intermingling of personnel. IBS design provides unobstructed floors with segregated utility risers and distribution systems.

19.1.2 Policy. The IBS design concepts outlined in this section can reduce construction cost and time. The basic concepts apply to all medical facilities regardless of size. The more sophisticated walk-on deck concept should be considered when justified by the size and complexity of the facility but its use must must be approved by DMFO.

19.1.3 Implementation. Projects which are candidates for full application of the IBS design concepts, including the walk-on deck, shall be studied as at least one of the initial Block Plan alternative design solutions. The study shall compare first costs with operating, maintenance and alteration costs for a designated life cycle. Those projects which prove conclusively that IBS is equal to or more cost effective than non-IBS design may use IBS in the final Concept Design solution.

19.2 IBS Elements. An IBS facility is composed of modules. Each systems module is a designated unit of space, one floor in height, served by its own service distribution systems. A systems module consists of a utility pod, an occupied zone, a distribution zone, and a connection zone. The relationship of the various zones is illustrated in Figure 19-1. Systems modules are mechanically independent. The modules should range from 930 to 2090 m^2 (10,000 to 22,500 ft^2) in area.

19.2.1 Utility Pod. The utility pod contains air handling unit(s) with associated fans, pumps, etc., electrical and communications equipment with associated risers, and other main risers. Fresh air and exhaust openings are generally part of the utility pod enclosure. Personnel entry to the utility pod shall be from adjacent or nearby stairs outside of the occupied zone. Utility systems serving the occupied zone enter and leave the utility pod through the distribution zone. The utility pod is defined by the floor and the underside of the floor structure above.

19.2.2 Occupied Zone. The occupied zone is the zone of functional activity of the facility. It is defined by the floor and the architectural finish ceiling above.

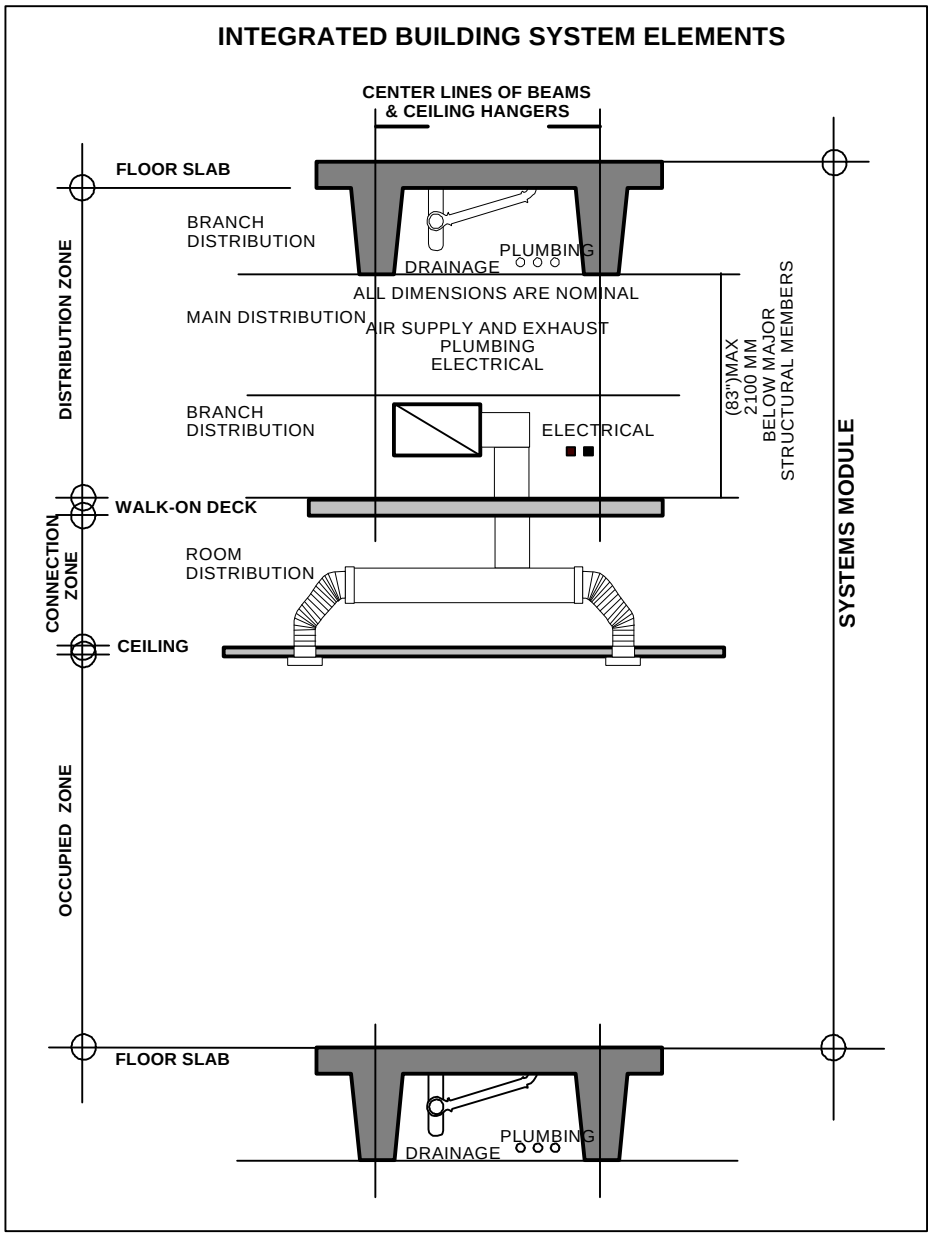
INTEGRATED BUILDING SYSTEM ELEMENTS
CENTER LINES OF BEAMS
& CEILING HANGERS
FLOOR SLAB
BRANCH
DISTRIBUTION
PLUMBING
DRAINAGE
ALL DIMENSIONS ARE NOMINAL
MAIN DISTRIBUTION
AIR SUPPLY AND EXHAUST
PLUMBING
ELECTRICAL
(83")MAX
2100 MM
BELOW MAJOR
STRUCTURAL MEMBERS
BRANCH
DISTRIBUTION
ELECTRICAL
WALK-ON DECK
ROOM
DISTRIBUTION
CEILING
DISTRIBUTION ZONE
CONNECTION
ZONE
OCCUPIED ZONE
SYSTEMS MODULE
FLOOR SLAB
PLUMBING
DRAINAGE

19.2.3 Distribution Zone. The distribution zone accommodates the main horizontal utility distribution systems for a systems module. With few exceptions, all systems in the distribution zone downfeed to the connection zone. Sanitary and waste systems enter the distribution zone from the occupied zone above. In the walk-on deck concept, access aisles shall be maintained for maintenance personnel. The walk-on deck permits easy access to dampers, valves, and air terminal units. Care shall be exercised during early design, when systems are being organized, to ensure that an access aisle is provided at the perimeter of the distribution zone. Access to the distribution zone shall be from the utility pod or a key-operated service elevator designed to stop at the distribution zone levels. No access to the distribution zone through ceiling access panels in the occupied zone below shall be permitted. The access aisles shall be high enough for a workman to stand, exclusive of major structural members.

19.2.4 Connection Zone. In the walk-on deck concept, the connection zone is the layer of space between the architectural finish ceiling of the occupied zone and the underside of the walk-on deck of the distribution zone. The connection zone accommodates the horizontal distribution of utility systems for individual rooms. It shall be deep enough to accommodate recessed lighting fixtures and air diffusers and their connections. Access to the connection zone shall be from the occupied zone below.

19.3 IBS Justification. The following are some of the more significant considerations inherent in IBS which should be addressed in the IBS justification documentation.

19.3.1 Systems Modules. The systems module is the basic building block of the IBS facility by which economies may be achieved. Although there is a strict dimensional discipline associated with the system module, the overall organization and massing of the building can be varied according to specific project requirements. Repetitive systems modules will allow both expanded forms, as well as compact forms, to accommodate the need for a daylighting/solar approach or allow a closed approach that attempts to negate the effect of climate. These forms are illustrated in Figure 19-2.

19.3.2 Maintenance. Maintenance costs less for IBS facilities than for a conventional facility provided accessibility to systems in the distribution zone has been assured by observance of the organizational requirements defined in this section. All disciplines should exercise particular care during design to maintain clearances for main and secondary access aisles in the distribution zone.

19.3.2 Flexibility for Modifications and Alterations. Many areas of a medical facility are subject to frequent and significant modifications and alterations. In conventional facilities the disruption of adjacent areas can be lengthy and extensive. In an IBS facility with a walk-on deck in the distribution zone, disruptions in the occupied zone are minimized. Modifying or altering the interior of an IBS facility should be less costly than a non-IBS facility. The savings are attributable to easier access to building utility systems in the distribution zone and less extensive disruption in the occupied zone. Costs for temporary structures or spaces for relocation of ongoing functions should also be comparatively less.

FIGURE 19-2

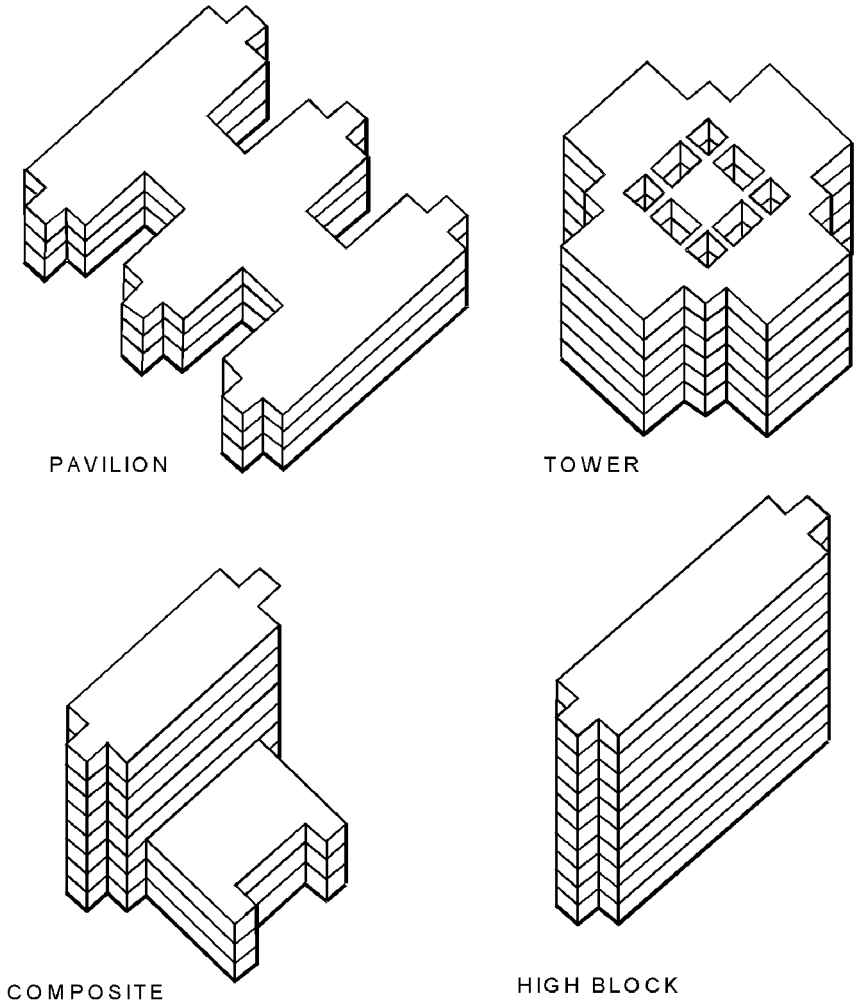

ALTERNATIVE BUILDING FORMS

FIGURE 19-2

19.3.3 Extended Life Span. IBS concepts may increase the economic life of a facility because the building utility systems and equipment are more accessible to accommodate change.

19.3.4 Cost Considerations.

19.3.4.1 Construction Cost. Construction cost refers to the cost of a complete and usable facility. Estimators should ensure the cost database is adjusted for IBS construction. Failure to do so will produce cost estimates that are misleading.

19.3.4.2 Material and Labor Cost Increases. An IBS facility may have increased material and labor costs when compared with a non-IBS facility due to a walk-on deck and increased vertical height. These additional costs are attributable to:

a) Structure,
b) Exterior envelope,
c) Stairs,
d) Air distribution and exhaust systems,
e) Piping,
f) Conduit,
g) Conductors, and
h) Elevator runs and doors.

19.3.4.3 Material and Labor Cost Reductions. Conversely, an IBS facility may have reduced material and labor costs when compared with a non-IBS facility due to the following:

a) Less fireproofing (in the case of steel construction),

b) Less costly acoustical provisions for reduction of sound transmission,

c) Reduced partition height,

d) Lighter partition framing,

e) Less elaborate suspended ceiling systems,

f) Fewer fire and smoke dampers,

g) Less elaborate partition and door bracing and structural support for ceiling mounted items,

h) Fewer and less costly coordination change orders due to visibility and accessibility of utility systems,

i) Significantly fewer fire and smoke barriers, and

j) Concurrent construction trade scheduling in both occupied and distribution zones.

19.3.4.4 Construction Time. Construction time for an IBS facility can be as much as 20 percent less than for a non-IBS facility. With a walk-on deck, trades can work concurrently in the occupied zone and the distribution zone rather than in sequence as in non-IBS construction. The majority of the work in the distribution zone can be performed in a comfortable, standing position with feet on the floor instead of a ladder. Repetition by modular design and standardization of building utility systems can also reduce the construction time. The related impact on construction cost for IBS facilities when compared with non-IBS facilities includes the following:

a) Reduced cost for Government supervision and administration .

b) Reduced cost for contractor overhead,

c) Reduced cost escalation, and

d) Lower labor costs due to several trades being able to work at the same time thereby allowing finish work to start in the occupied zone while utility systems are being installed in the distribution zone.

19.4 Design Considerations.

19.4.1 Medical Planning Considerations.

19.4.1.1 Functional and Departmental Planning. Better functional and departmental relationships are achievable in an IBS facility. It is essential, however, that the design team leader confer with the other members of the design team while planning options are being considered to ensure that IBS design concepts can be achieved.

19.4.1.2 System Exceptions. Certain functional elements may not lend themselves economically to the IBS walk-on deck concept. Examples are a sloped floor area, a high ceiling auditorium, operating room, warehouse, laundry or atrium, and an MRI suite where equipment weight or unusual structural requirements are applicable. These exceptions should be established early in the design process.

19.4.1.3 Mixed IBS/Non-IBS Facilities. When an IBS facility is planned to be contiguous with an existing non-IBS facility, design problems may occur. Existing floor-to-floor heights are typically less than required for IBS. Therefore, it is necessary to determine which floors of the new facility should align with existing floors. Continuity of existing facilities with new facilities should not be hastily assumed to preclude application of IBS concepts at any level in the new facility.

19.4.1.4 Building Expansion. The A-E design team shall be advised at the Prenegotiation Conference if vertical or lateral building expansion is anticipated and to what extent building utility systems, structure, and medical planning must provide for this.

19.4.1.5 Remodeling. An IBS facility will easily accommodate change after occupancy. The designer shall recommend which systems should be oversized to accommodate future change. Air handling units in the utility pods and ducts in the distribution zone may be designed to have

spare capacity. Likewise, certain plumbing and electrical riser systems may be designed to have spare capacity. The need for spare capacity may vary among the systems. Therefore, it is important that there be agreement on this matter among design team and Government review team during Concept Design development.

19.4.1.6 Drawing Requirements. Drawings for IBS facilities shall include plans and sections delineating utility system distribution channels in each distribution zone subzone and shall be coordinated with all disciplines. Actual routing of system branches and branch circuits shall be indicated. Penetrations between the distribution zone and the connection zone shall be coordinated with the distribution zone and occupied zone drawings. Branch circuitry through the distribution zone shall be routed to minimize the scope of electrical modifications in the occupied zone.

19.4.2 General Mechanical and Electrical Considerations.

19.4.2.1 Purpose. The purpose for having a deep distribution zone is to organize the mechanical and electrical distribution systems for easy accessibility. The A-E design team shall make every effort to coordinate the structural design with the mechanical and electrical requirements in the distribution zone. The structural suspension members for the walk-on deck should be placed in such a manner that they can be used to define distribution channels. All disciplines shall exercise particular care throughout the design process to maintain clearance for the access aisles.

19.4.2.2 Utility Pod. Building equipment and panelboards that serve the system modules shall be located in the utility pod. In multi-story facilities the utility pods shall be stacked so that plumbing and electrical risers can be efficiently and economically accommodated. The placement and design of the utility pods should not encumber flexibility for future change and expansion of the occupied zones.

19.4.2.3 The design shall allow access to the distribution zone from exit stairs and by key-controlled service elevator. Access panels from the occupied zone to the distribution zone above shall not be permitted.

19.4.2.4 Riser Locations. Risers and vertical circulation elements shall be located at the boundaries of the systems modules. In some cases, electrical and communications rooms shall be permitted in the interiors of systems modules adjacent to permanent structural elements, stairs, or vertical transportation elements to preclude unreasonably long service runs. See Paragraph 19.4.4.2 below.

19.4.2.5 Service Relationships. Except for gravity systems, all utilities in the distribution zones serve the connection and occupied zones immediately below. In open office, dental or laboratory areas, this requirement may have to be altered.

19.4.2.6 Spare Capacity for Flexibility and Adaptability. One of the goals of IBS design is the installation of modular central air handling systems. Air handling equipment shall be selected with conservative judgment and the distribution system sized for expansion capability. Care shall be taken to ensure that oversized systems will operate in a stable condition under present loads. IBS design lends itself to the use of low velocity systems. Such systems should be designed with initial velocities low enough so that when these systems are expanded to

their ultimate capacities, they will not be operating at velocities higher than allowed by design criteria.

19.4.2.7 Standardization of Equipment Sizing. Standardization shall be considered not only as an IBS concept, but also as a viable cost savings approach to mechanical and electrical equipment design. Cost savings shall not be limited to first cost only. The ease of maintaining standardized equipment and the reduced number and types of spare parts shall also be taken into consideration.

19.4.2.8 Accessibility. It is impossible to arrange for complete accessibility to every component of the various systems. However, it is important to examine the various accessibility requirements in order to achieve primary accessibility to all main systems, feeders, connections and maintainable equipment. This accessibility shall be within the distribution zone in order to minimize disruption of the occupied zone below.

19.4.2.9 Operating and Maintenence Cost Impact. As stated, a concerted effort is needed in IBS design to organize systems in the distribution zone for accessibility. The goal is to save or minimize downtime for future maintenance, repair, and modifications. The design team must realize that this is not a "conventional design" where the task is to tuck all services into the available ceiling space with access from below. The goal of the IBS design is to arrange the services in the distribution zone so that access to all services for maintenance and modification is horizontal through the distribution zone to minimize the interruption of the occupied zone below. IBS design should demonstrate the placement and usage of all access routings, taking into consideration the time factors required to perform different various maintenance and repair tasks and modifications.

19.4.2.10 Ventilation of Distribution Zone. Under normal conditions, the distribution zone will require at least two air changes per hour. A manually activated smoke purge system, designed to comply with NFPA 101 (reference 19a) requirements, is also required.

19.4.2.11 Air Handling System Selection. System selection shall be based on functional needs, life cycle cost, energy efficiency, and ease of maintenance and repair. IBS design shall not influence the system selection process. With ample space in the distribution zone for installation of distribution systems, any appropriate central air handling system can be considered.

19.4.4 Energy Conservation Consideration. IBS design can adapt any appropriate central HVAC system selected to satisfy the functional needs on an LCCA basis. The IBS system inherently requires a larger building envelope due to the added depth of the distribution zone. The gains and losses through the walls surrounding the distribution zone will be minimized by using effective insulation. High pressure, high velocity air distribution systems use more energy than their low velocity counterparts. IBS design lends itself to the use of low velocity systems. The air distribution system will be designed with initial velocity low enough so that when the system is expanded to its ultimate capacity, the distribution system will not be operating at a velocity higher than that specified in the design criteria.

19.4.3 Plumbing Considerations.

19.4.3.1 Sloping of Gravity Drains and Vent Lines. The depth of subzones within the distribution zone, as well as beam depth, shall be tested against the longest plumbing lines requiring slope for proper drainage. This criteria is important to ensure that plumbing lines in one subzone will not slope into the subzone below or require an intermediate riser through the occupied zone.

19.4.3.2 Spare Capacity . Plumbing mains shall be sized to accommodate anticipated maximum loads. Stubs, valves and caps shall be provided in plumbing risers for services not initially required. To centralize control, place all control valves in utility pods except those required to be in occupied zones, i.e., valves for medical gases.

19.4.4 Electrical and Communications Considerations.

19.4.4.1 Distribution. Distribution system routing, and the quantity and location of unit substations, shall be based on the size of the facility, life cycle cost, overall flexibility, and long-term system reliability. Compare the benefits of underground distribution for service among utility pods with distribution through the distribution zone considering flexibility, reliability and safety.

19.4.4.2 Electrical and Communications Room Locations. Electrical and communications rooms shall be located in the utility pods. Wiring shall be sized for allowable voltage drop at full design load. For exceedingly long systems modules, evaluate the need for additional rooms located at the opposite end of the system modules from the utility pods in order to maintain acceptable voltage drops, lengths of secondary cable runs, and number of devices per circuit. These additional rooms will be located in the occupied zones.

19.4.4.3 Modularity. The capacities of major electrical components such as main distribution panels and transformers shall be based on the areas served, rather than specific use, to allow for flexibility. In a similar manner, telephone and signal provisions should be standardized.

19.4.4.4 Secondary Distribution. Branch circuiting should be routed through the distribution channels in the distribution zone to allow for modification with minimal disturbance. Group conduit or utilize raceways to facilitate remodeling. Design raceways using conservative judgment and dedicate space in the distribution channels assigned to electrical services for future conduit and raceways. Include separate raceways for the emergency system of the essential electrical system.

19.4.4.5 Signal System Distribution. Cable trays shall be used to distribute signal wiring. Ground continuity shall be provided throughout the cable tray system. Design cable trays using conservative judgment and dedicate space in the distribution channels assigned to communications systems for future cable tray installation.

19.4.4.6 Identification. Coded identification of conduit runs by voltage and function shall be provided. Circuit identification of electrical wiring and system identification of signal wiring shall be provided.

19.4.4.7 Lighting. Five footcandles of lighting shall be provided throughout the distribution zone. 150 lux (15 fc) shall be provided over access aisles, utilizing damage-resistant lighting fixtures. Provide emergency lighting over access aisles and at exits. Provide

multiple switching from all entries. Provide a pattern of receptacles for portable tools and extension cords.

19.4.4.8 Communications. A pattern of telephone jacks shall be provided in the distribution zone for portable telephones.

19.4.5 Fire Protection Considerations. Fire protection is a critical part of the design of any medical facility. IBS design presents an atypical configuration regarding fire safety planning and design. Sprinkler and fire alarm zones and smoke and fire separations shall be coincident with systems module boundaries. See Section 13: Fire Protection for additional information.

19.5 Construction Documentation. Provide complete layouts of major utility systems for each systems module distribution zone. Typical layouts are acceptable. Provide interdisciplinary cross sections at critical locations, i.e., above operating rooms, corridors, etc. Provide requirements in all pertinent specification sections for coordination of all disciplines prior to construction.

19.6 Bidding Consideration. To ensure that construction contractors take the various IBS concepts into account when preparing bids, IBS presentations are recommended for pre-bid conferences conducted by Construction Agents.

19.7 Preconstruction Requirement. A sample distribution zone, at least 93 m^2 (1000 ft^2) in area, should be constructed at the project site prior to actual construction of corresponding IBS elements. The sample should include the complete walk-on deck assembly with suspension members. The sample should also include elements of the utility systems within the distribution zone. Construction of the sample should be sufficiently in advance of actual construction to allow time for all necessary testing and approval.

REFERENCES

19a. NFPA 101, Code for Safety to Life from Fire in Buildings and Structures, National Fire Protection Association.

SECTION 20: CONSTRUCTION

20.1 General. The Construction Agents have the responsibility to administer and manage all aspects of construction in consonance with the final plans and specifications. The DMFO has the overall fiscal responsibility for the medical MILCON program. The Surgeon General's Health Facilities personnel for the respective Military Departments are responsible for ensuring compliance with medical functional standards and requirements during construction, for providing assistance and liaison between the medical community and the Construction Agent, and for providing continuity from planning and design through beneficial occupancy for each project.

20.2 Advertising. Authority to advertise for contract award will be given by the DMFO when the Design Agent has submitted to the DMFO a letter certifying: design completion, compliance with approved concept design, and a copy of the proposed bid schedule (base bid and proposed additive items, if any). A copy will be sent to the using Military Departments.

20.3 Contract Award. Projects may be awarded by the Construction Agent without DMFO prior approval if the low bid Current Working Estimate (CWE) is less than or equal to the current Programmed Amount (PA). If the low base bid CWE exceeds the current PA, the Construction Agent will notify DMFO and using Military Department within three working days of bid opening. The Construction Agent, after consulting with the using Military Department, will provide recommendations and options available regarding disposition of the bid results. Recommendations will include corrective measures sufficient to allow contract award within the current PA.

20.3.1 Bid Opening Report. A bid opening report will be provided by the Construction Agent to DMFO and the using Military Department within five (5) working days after bid data is available. Initial notification may be telephonic with written confirmation following. Identify in the report all project cost data including both contractor bid amounts (base bid plus additives) and all other non-contractor cost data which will form the basis of the Design Agent's recommended award CWE.

20.3.2 Award Report. Following contract award, provide to DMFO a Contract Award Report provided by the Construction Agent within five working days with a copy provided to the using Military Department. The report will include Government estimated cost for base bid and additive items, base bid award amount, additive item(s) award amount(s), other costs as listed in 20.3.1 above, name of contractor, award date, anticipated date of notice to proceed, projected construction start date, and anticipate Beneficial Occupancy Date (BOD).

20.4 Construction Management. This guidance applies to all projects in the Defense Medical MILCON Program unless a waiver is obtained from the DMFO.

20.4.1 Construction Management Plan. The Construction Agent will develop a construction management plan in close coordination with the using Military Department to incorporate the requirements for this section. A copy will be provided to DMFO for information. Establish procedures to ensure that coordination is accomplished in a appropriate manner to include project coordination meetings as required and Construction Management Team meetings.

20.4.2 Construction Management Team. Establish a Construction Management Team for all major MILCON projects. The team should consist of representation from the following organizations:

20.4.2.1 The Construction Agent--to provide the construction management services. The management of the contract and interface with the construction contractor are the responsibility of the Construction Agent.

20.4.2.2 The using Military Department representatives (HFPO, MCLO, PHFO)--are responsible for the timely coordination of any contract change order affecting the scope and functional use of the facility, processing user-initiated change order requests, project surveillance, service specific technical criteria, and assisting the Construction Agent in expediting the acceptance and transfer of the completed construction. The The using Military Department shall furnish information and participate in review of shop drawings and inspections prior to acceptance of technical equipment. Inquiries shall be addressed to the appropriate authority.

20.4.2.3 The Installation Engineer--to participate in matters which affect the military installation such as maintainability, outages of site utilities, and traffic flow.

20.5 Construction Change Orders. Incorporate changes to the construction contract through a deliberate procedure that is time sensitive and results in the most advantageous procurement method for the government. To minimize disruption to the ongoing construction contract and to reap the benefits of competition, changes which can be deferred to the end of the project may be held for accomplishment by a separate follow-on contract on case-by-case basis. Approval authority is dependent on the size, type of change, and project funds status, as enumerated below:

20.5.1 Mandatory Changes. Mandatory changes are changes that must be made to allow the construction to proceed in a normal manner or provide a fully functional facility. The changes normally fall into one of the following categories:

20.5.1.1 Differing site conditions require a change,

20.5.1.2 The plans or specifications conflict with site conditions,

20.5.1.3 Errors or omissions in the plans or specifications require correction, and

20.5.1.4 Changes in building technology since the facility was designed.

20.5.2 Non-Mandatory Changes. Contract modifications for changes in medical operating procedures, equipment, or capabilities; or to improve the maintainability or functionality of the facility; or to implement contractor value engineering (VE) proposals. These changes are optional in nature but may provide a benefit to the Government. These are changes which, whether implemented or not, will result in a fully functional facility when the facility is completed.

20.5.2.1 Contractor V-E Proposals. These changes must be carefully scrutinized by the highest level within the Construction Agency and by the using Military Department to assure that medical standards and requirements are not compromised.

20.5.2.2 Criteria and System Changes. Changes which alter system designs, life-safety features, or change functional requirements must be submitted to the highest level of the Construction Agency and the using Military Department representative prior to approval and incorporation.

20.5.2.3 Submit to the DMFO for approval changes which add significant, new features to the project which were not originally contemplated in the design.

20.5.3 Procedures. Include in the change order procedures coordination with representatives of the Construction Management Team and approvals that will be at the field level unless otherwise negotiated between the Construction Agent, the using Military Department, and the contractor.

20.5.3.1 Change Order Processing Length. Change orders must be processed as expeditiously as possible. Any change orders pending in excess of 90 days from submitted date will require the Construction Agent to provide a plan of action to complete the request to the using Military Department.

20.5.4 DMFO Approval. Submit all change orders with a cumulative government cost estimate in excess of $100,000 for DMFO concurrence prior to final obligation of contingency funds.

20.5.5 Mediation. Submit non-mandatory requested changes which cannot be resolved between the Construction Agent and the using Military Department through the appropriate Military Department channels to DMFO for review and final decision.

20.6 Contingencies.

20.6.1 Funds Management. DMFO may suballocate all of the apportioned contingency funds for each project (typically five percent for new construction and ten percent for alteration and upgrades) to the Construction Agent who will allocate the funds as follows: when the total is 5%, 2% for mandatory changes, 2% for nonmandatory changes, and 1% for management reserve; when total is 10%, 6% for mandatory changes, 3% for nonmandatory changes, and 1% for a management reserve.

20.6.2 Reporting. The Construction Agent will provide quarterly status of funds reports to DMFO and using Military Department of all contingency funding.

20.6.3 If funds required for either mandatory or non-mandatory changes exceed the amount available and the management reserve account is inadequate, the Construction Agent will notify DMFO in writing along with justification for additional contingency funds as appropriate.

20.7 Installed Equipment (Category E and F).

20.7.1 Funds Management. The Construction Agent will suballocate funds required to procure this equipment as determined by the using Military Department up to the amount shown on the DD Form 1391 and as reflected in the equipment list as Category E and F.

20.7.2 The Construction Agent shall notify DMFO if actual requirements exceed the apportioned amount.

20.7.3 Reporting. The Construction Agent shall provide DMFO with a quarterly update on the status of MILCON equipment funds. Final MILCON Funds Status Report (see para. 20.9.3) shall include a list of the equipment purchased by the Construction Agent or using Military Department.

20.8 Contractor Claims.

20.8.1 Construction Agents will notify DMFO of submitted contractor claims having merit within 30 working days of date of merit validation for claims in excess of $100,000. An information copy will be furnished to the using Military Department.

20.8.2 Such claims will be accompanied with a narrative explanation and assessment of the claim's merit, recommended resolution, estimated final cost, and whether or not sufficient contingency funds are available.

20.8.3 The DMFO is responsible for monitoring fiscal compliance with the Public Law that provided Military Construction authorization. The Construction Agent is responsible for keeping the DMFO apprised of any field decision or change order request with merit which may exceed the Public Law and require a Congressional cost variation hearing.

20.9 Reporting Requirements. The Design and Construction Agents submit the following reports to DMFO and the using Military Department no later than three days prior to each Quarterly Execution meeting. Existing automated reports concurrently in use by the Design and Construction Agents which contain the requested information are acceptable substitutes for the report formats listed below:

20.9.1 Project Status Report (Figure 2-3).

20.9.2 MILCON Funds Status Report (Figure 2-3). List for each DMFO managed project the project title/location, using Military Department, PA, amount of MILCON funds suballocated for the project, estimated award CWE for projects which have not yet reached bid opening date, actual award CWE for awarded projects, and the estimated and actual savings.

20.10 Acceptance Plan. An acceptance plan will be developed by the construction and management team. The plan will include pre-final and final inspection schedules, training requirements and schedules, testing requirements and schedules, acceptance and turnover documents, and as required, phased and interim occupancy requirements.

20.11 Post-Occupancy Evaluation (POE). The Medical Facilities Acquisition and Maintenance Board (MFAMB) will, in cooperation with the Design/Construction Agent and the using Medical Department representatives, conduct Post-Occupancy Evaluations of new facilities and periodic on-site visits to all other facilities. Provide copies of all Post Occupancy Evaluation reports to DMFO for information. Information concerning the functioning of the basic and the facility's mechanical and other engineering systems will be used by the MFAMB to update design criteria (see Section 1). The Military Departments are also authorized to perform their own Post-Occupancy Evaluations. Forward recommendations for criteria changes resulting from a POE to the MFAMB.

20.12 Liaison and Design Feedback. Using Military Departments will institute procedures for securing information on the functional efficiency of all new major Medical and Dental Treatment Facilities. Use the information thus derived to enhance and modify Medical and Dental Treatment Facility design criteria leading to improved future Medical and Dental Facility designs. In addition, furnish any significant findings to

the DOD Medical Facility Acquisition and Maintenance Board (MFAMB) for the consideration of the other Military Departments. Information shall be secured through Post Occupancy Evaluations.

20.13 Statement of Conditions. The Construction Agent will provide a Statement of Conditions for the Joint Commission on Accreditation of Healthcare Occupancies (JCAHO) Environment of Care Standards for certification purposes.

BLANK PAGE

APPENDIX A
ARCHITECTURAL AND ENGINEERING DESIGN REQUIREMENT

LEGEND and NOTES

SYNOPSIS

Appendix A is a compilation of detailed architectural and engineering design criteria organized by standard Room Codes. The Room Codes used to organize the Appendix A are the same as the codes used to organize the Program for Design and the Equipment List, so the initial design requirements should be well established for the designer.

TABLE OF CONTENTS

ITEM	PAGES
Synopsis and Table of Contents	A-1
Legend and Notes	A-2 thru A-13
Database	A-14 thru A-109

APPENDIX A
ARCHITECTURAL AND ENGINEERING DESIGN REQUIREMENT

LEGEND and NOTES

1. Room Code (5 characters). Room identifier from DoD space planning criteria. This code is the reference key that ties the Appendix A criteria to the DoD Program for Design.

2. Room Name (37 characters). From the DoD space planning system.

3. Architectural (27 characters).

a. Matrls and Fin. Materials and Finishes (13 characters).

FL Floor and base finishes (2 characters). See Architectural Note 1.

AR Acrylic resin system with integral coved base. See Architectural Note 12.
CP Carpet with resilient base, see Architectural Note 2.
CS Concrete sealer. Resilient base on gypsum. wallboard and plaster walls. No base on concrete or block walls.
CT Ceramic tile with ceramic tile base.
ER Epoxy resin system with integral coved base. See Architectural Note 12.
ET Epoxy terrazzo with epoxy terrazzo base.
PF Prefabricated.
QT Quarry tile with quarry tile base.
SP Special. Determined by designer.
SV Sheet vinyl with integral vinyl base. See Architectural Note 3.
VT Vinyl composition tile with resilient base. See Architectural Note 2.

WAL Wall Material & Finish (3 characters). First character is wall material. Second and third characters are finish. See Architectural Note 1.

Wall Material (first character)

C Concrete
B Concrete block or clay tile
G Gypsum wallboard. See Architectural Note 4.
P Plaster
S Special. Determined by designer.

APPENDIX A
ARCHITECTURAL AND ENGINEERING DESIGN REQUIREMENT

LEGEND and NOTES

Wall finish material (second and third characters)

AF Acoustical wall fabric
CS Concrete sealer
CT Ceramic tile
LG Liquid Glaze Coat. See Architectural Note 5.
PF Prefabricated
PT Paint.
EL Epoxy coating, seamless, lead lined. See Architectural Note 10.
EP Epoxy coating, seamless. See Architectural Note 10.
SP Special. Determined by designer.
VF Vinyl wall fabric. See Architectural Note 6.
VP Veneer plaster. See Architectural Note 7.

CLG Ceiling Material and Finish (3 characters).
See Architectural Note 1.
First character is ceiling material.
Second and third characters are finish.

Ceiling material (first character).

A Acoustic ceiling tile
C Concrete
G Gypsum wallboard
P Plaster
S Special. Determined by designer.

Ceiling Finish Material (Second and third characters)

CS Concrete sealer
LG Liquid Glaze Coat
PF Prefabricated
PT Paint
SP Special. Determined by designer.
EP Epoxy coating, seamless, with coved corners. See Architectural Note 11.
T1 Standard finish.
T2 Waterproof finish.

APPENDIX A
ARCHITECTURAL AND ENGINEERING DESIGN REQUIREMENT

LEGEND and NOTES

b. CLG HT. Maximum ceiling height in millimeters (4 characters).

2400mm = 7'- 10.5" corresponds to 8'-0"
2600mm = 8'- 6.4" corresponds to 8'-6"
2700mm = 8'- 10.3" corresponds to 9'-0'
2900mm = 9'- 6.2" corresponds to 9'-6"
3000mm = 9'- 10.1" corresponds to 10'-0"
A = If this area is combined with a delivery room, provide 3000mm (10'-0") ceiling height, minimum. If not combined, provide 2400mm (8'-0") CLG HT.
B = 3000mm (10'-0") minimum.
VAR = Varies (designers choice)

c. D00R SIZE. First line is minimum door width in millimeters (4 characters). Second line is door width in feet and inches.

450mm corresponds to 1'-6"
900mm corresponds to 3'-0"
1050mm corresponds to 3'-6"
1200mm corresponds to 4'-0"
A = Pair 750mm (2'-6") doors.
B = Pair 900mm doors.
C = Pair 1050mm doors.
D = Double door, 1200mm and 450mm
E = Pair 900mm doors or 1200mm doors as directed by using service.
F = 900mm between scrub room and nursery. 1200mm between delivery room and nursery.
G = In clinics, provide 1050mm. In hospitals, provide double door, 1050mm and 450mm.
H = 2400mm (8'-0"), pair 1200mm doors, by 2600mm(8'6") breakaway glass doors or double door 1200mm and 450mm as directed by using service.
I = 3000mm (10'-0") by 3000mm (10'-0") minimum. Number as required by dock.
J = Main OR door, pair 900mm doors. Staff door from clean corridor, 1200mm. Door to sub-sterile, 1050mm.
K = Main OR door, pair 900mm doors or 1200mm and 450mm or 1050 mm and 450 mm as directed by using service. Staff door from clean corridor, 1200mm. Door to sub-sterile, 1050mm.
L = Darkroom door. Provide revolving door or light tight door, or vestibule entry, as appropriate.
M = Open (no door) or 900mm door as directed by using service.
N = Open (no door) or 1200mm door as directed by using service.
SP = Special, designers choice.
VAR = Varies, designers choice.
VET = Special door in veterinary facility. See Architectural Note 13.

LEGEND and NOTES

OPEN = No door required.

d. NOISE. ACOUSTIC NOISE LEVEL. (5 characters).

IN RM. Noise level in room (2 characters). First line is minimum, second line is maximum. See Architectural Note 8.

SC. Sound transmission Class (2 characters). see Architectural Note 9.

e. ARCHITECTURAL NOTES.

1. When two finishes are appropriate for a room, the preferred finish is shown in Appendix A first. The using Military Department may select the alternate finish.

2. Resilient Base. Rubber or vinyl coved base for use with resilient tile. Coved base shall terminate and butt at the face return of steel door jambs. A straight vinyl or rubber base or carpet base shall be used with carpet flooring. Fire-retardant wood blocking or metal runners shall be provided at the steel stud base channel runner for all gypsum board corridor walls.

3. Sheet Vinyl. Solid, seamless vinyl in either roll or tile format with routed, welded, grooved seams where melted vinyl is used for an impervious, waterproof seal. Chemical sealants are unacceptable. Cushioned sheet vinyl may not be used. Provide seamless sheet vinyl base integral with the flooring, using the same joint sealing application technique of grooved, melted, welded, vinyl for an impervious waterproof seal.

4. Gypsum wallboard. Minimum 5/8 inch ("green board" for damp or wet areas).

5. Liquid Glaze Coat. This coating is a seamless, sprayed-on, lusterless semi-gloss two-component polyester epoxy or polyurethane finish. Veneer plaster may be substituted for liquid glaze coat where impact resistance, cleanability, and moisture resistance is a factor.

6. Use type II vinyl wall fabric in all areas except corridors and cart traffic areas where type III vinyl wall fabric shall be used. Type III shall also be used in waiting rooms alcoved off major circulation corridors.

7. Veneer Plaster. May be used as an alternate to "green board" in damp or wet areas as a substitute for GVF, GLG, GCT; and, in corridors, litter holding, litter/wheelchair waiting/alcoves, Utility Rooms, Treatment Rooms, toilets without showers, Physical Therapy, Operating and Delivery Rooms, Nurse Stations, Laboratories and related spaces),

LEGEND and NOTES

Central Sterile Supply, patient bedrooms, and anywhere else water-resistance, cart abuse, cleanability, and impact resistance is required. Veneer Plaster Wallboard (GVP) is a suitable substitute for plaster.

8. The acoustical noise level in the room is the design value for the NC-Level for the background (ambient) noise level.

9. The STC specifies the performance of the room enclosure in isolating against airborne sound. Where no door is specified, the remainder of wall partition/ceiling system should still be designed to this value. This design value is generally considered as a minimum rating.

10. Seamless epoxy coating shall be used on all walls throughout the veterinary facility. Concrete block substrate shall be vermin-proof construction with flush joints.

11. Seamless epoxy coating shall be used on ceilings in the veterinary facility. Gypsum wallboard substrate shall consist of two layers of fiber reinforced wallboard. Ceiling shall have coved corners.

12. Provide non-slip finishes in corridors and all areas where pedestrian traffic is anticipated. Provide smooth finish where greater degree of cleanability is required (under cage racks for example).

13. Provide vermin proof hollow metal doors, 48 inch by 96 inch, with 12 inch by 12 inch red glass vision panel and recessed hardware. Provide door seals. Do not provide door lock.

4. STRU FLR LOAD. Floor Load in kilo-Pascal (4 characters).

kPa	corresponds to pounds/SF (PSF)
3	60
4	80
5	100
6	125
7.5	150
10	200
12	250
13	275
17	350

A = Design for actual wheel loads or 7.5 kPa (150 psf) minimum.

B = Design for actual equipment loads or 7.5 kPa (150 psf) minimum.

C = Design for actual equipment loads or 5 kPa (100 psf) minimum.

D = Design for actual weight of shelves plus 55 kg/filing meter (3.1 lbs/filing in.) or 7.2 kPa (150 psf) minimum on the floor.

LEGEND and NOTES

5. ELECTRICAL. (20 characters).

a. LIGHT.

LEV Maximum general lighting level in lux (4 characters). First line is general lighting level, second line is task lighting.

LUX	corresponds to Footcandles
100	10
150	15
200	20
300	30
500	50
700	70
1100	100
1600	150
2100	200

N Lighting Notes (1 character). Second line is second note.

A. Provide full-range dimming in room or special task area.

B. Provide recessed ceiling exam fixture with high color rendering type (80 minimum CRI) lamps and 1100 lux task illumination on bed or recovery area (see section 10)

C. Provide high color rendering index type (80 minimum CRI) lamps.

D. Provide O.R. Type Light Fixture or exam Light with dimmer at task location.

E. Explosion Proof design typically required.

F. Provide multi-level switching with conventional on/off switching. Provide lighting control at individual task location where practical.

G. Provide Safelight for film processing as required by Equipment List.

H. Provide full-range dimming at task location.

I. Provide recessed ceiling mounted task illumination with full-range dimming.

APPENDIX A
ARCHITECTURAL AND ENGINEERING DESIGN REQUIREMENT

LEGEND and NOTES

b. EM. PWR. Emergency power required in room (9 characters).

PWR Approximate percentage of general power outlets on emergency system or note as listed below (3 characters).

R Selected receptacles.
R1 One receptacle per bed.
RA All receptacles.
RC Dedicated receptacles for critical care (refer to NFPA-70, Article 517).

LT Approximate percentage of general lighting on emergency system or note as listed below (3 characters).

L Task Lighting.
LB Task Lighting, General Illumination, and battery powered lighting. (refer to section 10).
LE Egress Lighting as required by NFPA 101.

N Emergency Power notes (1 character).

E. Selected equipment connections.
U. Provide emergency power only as required by using Military Department.
S. Special.

LEGEND and NOTES

6. Medical Gases (23 characters). The number of outlets required for each gas type is listed in the appropriate column. "0" is entered in columns where no outlet is required to make the table easier to read.

MCA - Medical Compressed Air
DCA - Dental Compressed Air
LA - Laboratory Air
PA - Process Air
MV - Medical Vacuum
DHV - Dental High Vacuum
DLV - Dental Low vacuum
LDE - Laboratory Dust Evacuation
OX - Oxygen
NO - Nitrous Oxide
NI - Nitrogen

N - See Medical Gas Notes (1 character).

MEDICAL GAS NOTES.

A. Each patient is provided an oxygen. In psychiatry and light care units, pipe medical gases through the zone valve box to a point immediately above the corridor ceiling where the piping will be capped.

Each patient is provided a medical vacuum inlet, see individual listing.

Each patient is provided access to a medical air outlet. Where two patients share a common wall, they may share a single outlet, excluding psychiatric patients. Do not provide in pediatric play area.

B. The medical gases specified will be per patient station, workstation, etc.

C. Each overhead service column will contain 2 OX, 2 MV, 1 MCA, 1 NO. In addition, 1 OX, 1 MCA, 1 MV will be wall or overhead track mounted, as indicated, for infant resuscitation. Dedicated c-section rooms may have 2 columns.

D. All anesthetizing locations will have a waste anesthetic gas disposal system. Use of medical vacuum system is not recommended for evacuation in DoD facilities. DLV may be used in dental treatment rooms for anesthesia scavenging where a central system is installed.

APPENDIX A
ARCHITECTURAL AND ENGINEERING DESIGN REQUIREMENT

LEGEND and NOTES

E. One each OX, MCA, MV is required in both the headwall unit and the infant resuscitation area of the birthing room.

F. Each overhead service column will contain 2 OX, 2 MV, 2 M**C**A, 1 NO and 1 NI. An additional MV will be provided on each wall as appropriate.

G. The medical gases specified will be per bassinet or infant station.

H. The medical gases specified will be per 6-8 bassinets or infant stations. Where the LDR birthing room concept is used, a minimum of one grouping will be provided in each LDR.

I. For equipment testing and calibration, equipment shall be tested with the specific gas used in normal operation.

J. Provide valved regulator station for PA.

K. Each utility center requires 1 DCA and 1 DLV.

L. A natural gas outlet (counter mounted) and a lab air outlet (under counter-mounted) will be provided at each dental work station as shown in Appendix A.

M. All contingency beds require 1 OX, 1 MV, 1 MCA per bed station. In bed expansion situations in "peace time" facilities also provide 1 OX, 1 MV, 1 MCA per contingency bed expansion requirements noted in the program for design.

N. Facilities may use nitrogen for driving surgical handpiece in oral surgery DTRs.

LEGEND and NOTES

7. HVAC (23 characters).

a. BL. Air Balance (2 characters)

+- Room is switchable to operate as a "++" or "--" space as described below.
++ Room exhaust and/or return is 20% less than supply.
+ Room exhaust and/or return is 10% less than supply.
0 Room exhaust and/or return is equal to supply.
- Room exhaust and/or return is 10% more than supply.
-- Room exhaust and/or return is 20% more than supply.
EX Room totally exhausted without supply.

b. AC. Air Change (2 characters) is the minimum total air changes per hour required to meet ventilation requirements at design conditions. These rates are considered the minimum required for normal health and comfort consideration. Additional air may be required for temperature, dilution, and odor control, as well as air requirements for such items as hoods, glove boxes, clean-air stations, combustion equipment and dust collectors.

c. OA. Outside Air (2 characters) is the minimum outside air changes per hour required to meet ventilation requirements at design conditions.

* Asterisk indicates that ventilation is to be based on the greater of 4 outdoor air changes or 15 CFM outdoor air per person.

d. TEMP. Interior design temperature. First line is in degrees Celsius (C), second line is in degrees Fahrenheit (F), for heat gains calculations. When the only temperature listed is for the summer condition, this temperature will be used for year around operation. When cooling is required during winter, such as in interior zones, temperature listed under summer conditions should be used.

SM. Minimum design temperature (2 characters) for summer months.

WN. Maximum design temperature (2 characters) for the space during heating season.

LEGEND and NOTES

e. RH. Relative Humidity (1 characters). This is the relative humidity to be maintained in a space as part of the designed conditions. See HVAC Note A.

Blank RH may vary from 30-60%.
Y RH must be controlled at 55%, + or - 5%.

f. FL. Filtration (5 characters) indicates the level and location of filtration required. See HVAC Note B.

IN Intermediate filtration in percent (2 characters).
FN Final filtration in percent (2 characters).

g. EX. Exhaust Outside (1 character). This column lists areas that require 100% exhaust directly to the outside.

Y Exhaust to outside required.
Blank Exhaust not required.

h. N. See HVAC Notes (3 characters)

HVAC Notes.

A. Relative Humidity (RH). The relative humidity may vary from 30 percent to 60 percent except where other design values are given or where there is no requirement for humidity control. Specific summer RH control is not required except for those areas provided under specific notes. Winter RH control is not required except as provided under notes.

B. General Filtration. Prefilters, 25%, are required for all outdoor air. The values for the 25%, 80% and 90% filters are by the atmospheric dust spot efficiency test. The atmospheric dust spot efficiencies are the minimum average and are based on ASHRAE Standard 52-76. The HEPA filter uses the DOP (Dy-Octyl) Phthalate, or bis(2-ethylhexylphthalate) test method. The DOP test efficiency is based on MIL-STD 282. All filters should be installed to prevent leakage between the filter segments and between the filter and its supporting frame.

C. During period of non-use, the air volume may be reduced to 6 air changes per hour, while maintaining the required air balance. 90 percent intermediate filtration is indicated because the same AHU normally serves adjacent OR/DR support areas requiring this level of filtration. Where the AHU serves only OR/DR spaces, or OR/DR areas combined with other areas that do not require 90 percent intermediate filtration, the intermediate filtration should be reduced to 80 percent. Final filtration requirements do not change.

D. Not used.

APPENDIX A
ARCHITECTURAL AND ENGINEERING DESIGN REQUIREMENT

LEGEND and NOTES

E. General, Isolation Rooms. For negative isolation, room shall be negative to anteroom and positive to toilet. For positive isolation, room shall be positive to both anteroom and toilet. Anteroom shall be negative to corridor at all times. For isolation room used for patients with a high susceptibility to infection from leukemia, burns, bone marrow transplant, organ transplant, or Acquired Immunodeficiency Syndrome, HEPA should be used on air supply system.

F. Exhaust all to outside applicable to process only.

G. Utilize NFPA 99, para 4-3.1.2.1.

H. May require vehicle exhaust.

I. During periods on non-use, ventilation rate may be reduced to 5 total air changes while maintaining positive pressurization. One return air register, sized for at least 20% of the total return air for the dental operatory, should be located at low level, though not less than 6 inches above finish floor.

J. For projects incorporating brace/appliance fitting or shop applications, evaluate room and equipment exhaust requirements for removal of toxic or flammable fumes and dust.

K. Air supplied from the corridor.

L. Verify hood requirements.

M. Provide hoods as required.

N. Verify computer heat load requirement.

O. Provide adjustable (to user) humidistat within the room.

P. Provide adjustable (to user) thermostat and humidistat within the room.

Q. HEPA Filtration of exhaust authorized if required by using military department. Exhaust of TB isolation room, toilet, and anteroom to be by dedicated exhaust system, ie., exhaust system serving only TB isolation room(s). TB isolation room pressure to remain constant - not switchable to positive.

R. HEPA Filtration of supply air required.

S. Isolation Room pressure to remain constant - not switchable.

APPENDIX A
ARCHITECTURAL AND ENGINEERING DESIGN REQUIREMENTS

STRU ROOM CODE LOAD	ROOM NAME	ARCHITECTURAL MATRL+FIN FL	WAL	CLG	CLG HT	DOOR SIZE	NOISE RM	NOISE SC	FLR
ADMR1	ADDRESSOGRAPH MACHINE ROOM	VT	GAF	AT1	2400	900	40	55	3
		CP	..	.	8-0	3-0	45		60
ADP01	AUTOMATIC DATA PROCESSING COMPUTER	VT	GAF	AT1	2400	900	35	50	C
		CP	..	.	8-0	3-0	40		C
ADPT1	AUTOMATED DATA PROCESSING TERMINAL	VT	GAF	AT1	2400	900	35	50	C
		CP	..	.	8-0	3-0	45		.
ADPV1	AUTOMATED DATA PROCESSING VAULT	VT	GAF	AT1	2400	1200	35	50	D
		CP	..	.	8-0	4-0	45		.
ADPXX	COMPUTER ROOM	VT	GPT	AT1	2400	900	35	40	5
		.	..	.	8-0	3-0	40		100
AMB01	AMBULANCE SHELTER	CS	SSP	SSP	VAR	SP	.	.	A
		.	..	.	VAR	SP	.		A
AMB02	AMBULANCE GARAGE	CS	BPT	SSP	VAR	SP	35	50	A
		.	..	.	VAR	SP	40		A
ANCW1	ANESTHESIA CLEAN WORKROOM	SV	GLG	AT2	2400	900	35	40	3
		.	..	.	8-0	3-0	40		60
ANSW1	ANESTHESIA SOILED WORKROOM	SV	GLG	AT2	2400	900	35	40	3
		.	..	.	8-0	3-0	40		60
APAM1	APPLIANCE ADJUST/MODIFY FULL	VT	GPT	AT1	2600	1200	35	40	C
		.	..	.	8-6	4-0	40		.
APAM2	APPLIANCE ADJUST/MODIFY SHOP SMALL	VT	GPT	AT1	2400	900	35	40	3
		.	..	.	8-0	3-0	40		60
APFB1	APPLIANCE FULL BRACE SHOP	VT	GAF	AT1	2600	1200	70	40	5
		.	..	.	8-6	4-0	80		100
APFR1	APPLIANCE FITTING ROOM	VT	GPT	AT1	2400	900	35	40	3
		.	..	.	8-0	3-0	40		60
APLA1	APPLIANCE LAMINATION AREA	VT	GPT	AT1	2400	900	35	40	C
		.	..	.	8-0	3-0	40		.
APMS1	APPLIANCE MACHINE SHOP	VT	GPT	AT1	1200	1200	35	40	D
		.	..	.	8-6	4-0	40		.
APSH1	APPLIANCE SHOE SHOP	VT	GPT	AT1	1200	1200	35	40	C
		.	..	.	8-6	4-0	40		.

APPENDIX A
ARCHITECTURAL AND ENGINEERING DESIGN REQUIREMENTS

	ELECTRICAL					MEDICAL GASES											HVAC									
						M	D				D	D	L													
ROOM	LIGHT		EM PWR			C	C	L	P	M	H	L	D	O	N	N				TEMP		R	FL		E	
CODE	LEV	N	PWR	LT	N	A	A	A	A	V	V	V	E	X	O	I	N	BL	AC	OA	SM	WN	H	IN	FN	X	N
ADMR1	500	.	.	.	.	.	.	.	.	.	.	.	.	.	.	.	.	0	4	1	26	20	.	.	.	.	.
	.	.			.												.				78	68					.
ADP01	500	.	.	.	U	.	.	.	.	.	.	.	.	.	.	.	.	0	6	1.5	26	20	.	.	.	.	.
	700	.			.												.				78	68					.
ADPT1	500	.	.	.	U	.	.	.	.	.	.	.	.	.	.	.	.	0	6	1.5	26	20	.	.	.	.	.
	700	.			.												.				78	68					.
ADPV1	100	.	.	.	U	.	.	.	.	.	.	.	.	.	.	.	.	0	6	1.5	26	20	.	.	.	.	.
	.	.			.												.				78	68					.
ADPXX	500	.	.	LS	.	.	.	.	.	.	.	.	.	.	.	.	.	0	6	2	22	22	.	.	.	.	.
	.	.			.												.				72	72					.
AMB01	50	.	.	LS	.	.	.	.	.	.	.	.	.	.	.	.	.	.	.	.	.	.	.	.	.	.	.
	.	.			.												.				.	.					.
AMB02	50	.	.	LS	.	.	.	.	.	.	.	.	.	.	.	.	.	0	6	4	.	20	.	.	.	Y	H
	.	.			.												.				.	68					.
ANCW1	700	.	R	L	.	1	.	.	.	1	.	.	.	1	1	.	D	-	4	1.5	24	.	.	90	.	Y	.
	.	.			.												.				75	.					.
ANSW1	300	.	R	L	.	1	.	.	.	1	.	.	.	1	1	.	D	-	6	2	24	.	.	90	.	Y	.
	.	.			.												.				75	.					.
APAM1	500	C	R	.		.	.	1	1	.	.	.	1	.	.	.	.	0	6	1.5	26	21	.	.	.	.	J
	.	.															.				78	70					M
APAM2	500	C	.	.	.	.	.	1	1	.	.	.	1	.	.	.	.	0	6	1.5	26	21	.	.	.	.	J
	.	.			.												.				78	70					M
APFB1	500	C	.	.	.	.	.	1	1	.	.	.	1	.	.	.	J	0	6	1.5	26	21	.	.	.	.	J
	.	.			.												.				78	70					M
APFR1	500	C	.	.	.	.	.	1	1	.	.	.	1	.	.	.	.	0	6	1.5	26	21	.	.	.	.	J
	.	.			.												.				78	70					M
APLA1	500	C	.	.	.	.		.	1	.	.	.	.	.	.	.	.	-	6	1.5	26	21	.	.	.	Y	J
	.	.															.				78	70					M
APMS1	500	C	.	.	.	.	.	.	1	.	.	.	1	.	.	.	.	-	6	1.5	26	21	.	.	.	Y	J
	.	.			.																78	70					M
APSH1	500	C	.	.	.	.	.	.	1	.	.	.	1	.	.	.	.	-	6	1.5	26	21	.	.	.	Y	J
	.	.			.												.				78	70					M

APPENDIX A
ARCHITECTURAL AND ENGINEERING DESIGN REQUIREMENTS

STRU ROOM CODE LOAD	ROOM NAME	ARCHITECTURAL MATRL+FIN FL	WAL	CLG	CLG HT	DOOR SIZE	NOISE RM	NOISE SC	FLR
APWA1	APPLIANCE WELDING AREA	VT	GPT	AT1	1200	1200	35	40	D
		.	..	.	8-6	4-0	40		.
AUD01	AUDITORIUM	CP	SSP	SSP	VAR	900	25	50	5
		.	..	.	VAR	3-0	30		100
AVB01	AUDIOVISUAL BOOTH	PF	SPF	SPF	VAR	SP	25	50	3
		.	..	.	VAR	SP	30		60
AVPD1	AUDIOVISUAL PROGRAM DISTRIBUTION	VT	GPT	AT1	2400	900	25	40	3
		.	GAF	.	8-0	3-0	30		60
AVR01	AUDIOVISUAL ROOM	VT	GPT	AT1	2400	900	25	50	3
		.	GAF	.	8-0	3-0	30		60
BF000	BANKING FACILITY - EQ BY OTHERS	VT	GPT	AT1	2600	A	35	40	3
		.	GAF	.	8-6	A	40		60
BLND1	BLIND VENDORS AREA	VT	GPT	AT1	2400	900	35	40	3
		.	..	.	8-0	3-0	40		60
BMCW1	BIOMEDICAL, COMMON WORK AREA	VT	GLG	AT1	2600	1200	35	40	C
		.	..	.	8-6	4-0	40		.
BMER1	BIOMEDICAL, ELECTRONIC REPAIR	VT	GLG	AT1	2600	1200	35	40	C
		.	..	.	8-6	4-0	40		.
BMRA1	BIOMEDICAL, RECEIVING AREA	VT	GLG	AT1	2600	1200	35	40	3
		.	..	.	8-6	4-0	40		60
BMWS1	BIOMEDICAL, WORKSTATION	VT	GLG	AT1	2600	1200	35	40	3
		.	..	.	8-6	4-0	40		60
BRAR1	BEDROOM, ANTEROOM, FOR ISOLATION	VT	GPT	AT1	2600	1200	30	40	3
		SV	GLG	AT2	8-6	4-0	40		60
BRIC1	BEDROOM, INTENSIV/CORONARY, 1 BED	VT	GPT	AT1	2600	H	25	40	3
		SV	GLG	AT2	8-6	4-0	30		60
BRII1	BEDROOM, ISOLATION, INTENSIVE CARE	VT	GPT	AT1	2600	H	25	40	3
		SV	GLG	AT2	8-6		30		60
BRIM1	BEDROOM, ISOLATION, MEDICAL/SURG	VT	GPT	AT1	2600	1200	30	40	3
		SV	GLG	AT2	8-6	4-0	35		60
BRIP1	BEDROOM, ISOLATION, PEDS, CRIB	VT	GPT	AT1	2600	1200	35	40	3
		SV	GLG	AT2	8-6	4-0	40		60

APPENDIX A
ARCHITECTURAL AND ENGINEERING DESIGN REQUIREMENTS

	ELECTRICAL					MEDICAL GASES											HVAC									
						M	D				D	D	L													
ROOM	LIGHT		EM PWR			C	C	L	P	M	H	L	D	O	N	N				TEMP		R	FL		E	
CODE	LEV	N	PWR	LT	N	A	A	A	A	V	V	V	E	X	O	I	N	BL	AC	OA	SM	WN	H	IN	FN	X	N
APWA1	500	C	.	.	.	.	.	.	1	.	.	.	.	.	.	.	.	-	6	1.5	26	21	.	.	.	Y	J
	.	.			.												.				78	70					M
AUD01	300	F	.	LE	.	.	.	.	.	.	.	.	.	.	.	.	.	0	12	*	26	20	.	.	.	.	.
	.	.			.												.				78	68					.
AVB01	300	.	.	.	.	.	.	.	.	.	.	.	.	.	.	.	.	0	4	1	26	20	.	.	.	.	.
	.	.			.												.				78	68					.
AVPD1	300	.	.	.	.	.	.	.	.	.	.	.	.	.	.	.	.	0	4	1	26	20	.	.	.	.	.
	.	.			.												.				78	68					.
AVR01	300	A	.	.	.	.	.	.	.	.	.	.	.	.	.	.	.	0	4	1	26	20	.	.	.	.	.
	.	.			.												.				78	68					.
BF000	500	.	.	LE	.	.	.	.	.	.	.	.	.	.	.	.	.	0	4	1	26	20	.	.	.	.	.
	1100	.			.												.				78	68					.
BLND1	500	.	.	LE	.	.	.	.	.	.	.	.	.	.	.	.	.	.	4	1	26	20	.	.	.	.	.
	.	.			.												.				78	68					.
BMCW1	500	.	.	LE	.	1	1	1	1	1	0	0	0	1	1	1	.	-	4	1	26	20	.	.	.	Y	.
	.	.			.												.				78	68					.
BMER1	1100	.	.	.	.	.	.	.	.	.	.	.	.	.	.	.	.	-	4	1	26	20	.	.	.	Y	.
	.	.			.												.				78	68					.
BMRA1	300	.	.	LE	.	.	.	.	.	.	.	.	.	.	.	.	.	-	4	1	26	20	.	.	.	Y	.
	.	.			.												.				78	68					.
BMWS1	500	.	.	.	.	1	1	1	1	1	.	.	.	1	1	1	B	-	4	1	26	20	.	.	.	.	.
	.	.			.												D				78	68					.
BRAR1	300	.	.	L	.	.	.	.	.	.	.	.	.	.	.	.	.	-	10	2	24	24	.	90	.	Y	E
	.	.			.												.				75	75					.
BRIC1	300	B	RC	L	.	2	.	.	.	4	.	.	.	2	.	.	.	+	6	2	24	24	Y	90	.	.	P
	1100	.			.												.				75	75					.
BRII1	300	B	RC	L	.	2	.	.	.	4	.	.	.	2	.	.	.	+-	6	2	24	24	Y	90	.	Y	P
	1100	.			.												.				74	74					E
BRIM1	300	B	RC	L	.	1	.	.	.	2	.	.	.	1	.	.	A	+-	6	2	24	24	.	90	.	Y	E
	1100	.			.												.				75	75					.
BRIP1	300	B	RC	L	.	1	.	.	.	2	.	.	.	1	.	.	A	+-	6	2	24	24	.	90	.	Y	E
	1100	.			.												.				75	75					.

APPENDIX A
ARCHITECTURAL AND ENGINEERING DESIGN REQUIREMENTS

STRU ROOM CODE LOAD	ROOM NAME	ARCHITECTURAL MATRL+FIN FL	WAL	CLG	CLG HT	DOOR SIZE	NOISE RM	SC	FLR
BRIS1	BEDROOM, ISOLATION, STEP-DOWN	VT	GPT	AT1	2600	1200	30	40	3
		SV	GLG	AT2	8-0	4-0	35		60
BRIT1	BEDROOM, ISOLATION, TB	VT	GPT	AT1	2600	1200	30	40	3
		SV	GLG	AT2	8-6	4-0	35		60
BRIT2	BEDROOM, ISOLATION, IMMUNE SUPPRESSED	VT	GPT	AT1	2400	1200	30	40	3
		SV	GLG	AT2	8-6	4-0	35		60
BRLC1	BEDROOM, LIGHT CARE, 1 BED	VT	GPT	AT1	2600	1200	30	40	3
		.	GVF	.	8-6	4-0	35		60
BRLC2	BEDROOM, LIGHT CARE, 2 BEDS	VT	GPT	AT1	2600	1200	30	40	3
		.	GVF	.	8-6	4-0	35		60
BRLC4	BEDROOM, LIGHT CARE, 4 BEDS	VT	GPT	AT1	2600	1200	30	40	3
		.	GVF	.	8-6	4-0	35		60
BRMS1	BEDROOM, MEDICAL/SURGICAL, 1 BED	VT	GPT	AT1	2600	1200	30	40	3
		.	GVF	.	8-6	4-0	35		60
BRMS2	BEDROOM, MEDICAL/SURGICAL, 2 BEDS	VT	GPT	AT1	2600	1200	30	40	3
		.	GVF	.	8-6	4-0	35		60
BRMS4	BEDROOM, MEDICAL/SURGICAL, 4 BEDS	VT	GPT	AT1	2600	1200	30	40	3
		.	GVF	.	8-6	4-0	35		60
BRNP1	BEDROOM, NEURO/PSYCH, 1 BED	VT	GPT	GPT	2600	1200	35	40	3
		.	..	.	8-6	4-0	40		60
BRNP2	BEDROOM, NEURO/PSYCH, 2 BEDS	VT	GPT	GPT	2600	1200	35	40	3
		.	..	.	8-6	4-0	40		60
BRNP4	BEDROOM, NEURO/PSYCH, 4 BEDS	VT	GPT	GPT	2600	1200	35	40	3
		.	..	.	8-6	4-0	40		60
BRNP5	BEDROOM, NEURO/PSYCH, SECLUSION	VT	GPT	GPT	2600	1200	35	40	3
		.	VP	VP	8-6	4-0	40		60
BRNP6	BEDROOM, N/P, SECLUSION ANTEROOM	VT	GVF	AT1	2600	1200	30	40	3
			VP	VP	8-6	4-0	35		60
BRNS1	BEDROOM NURSE SERVER	V	GPT	AT1	2400	SP	30	40	3
		.	GLG	AT2	8-0		35		60
BRNS2	BEDROOM NURSE SERVER PEDIATRICS	VT	GPT	AT1	2400	SP	30	40	3
		.	GVF	AT2	8-0		35		60

APPENDIX A
ARCHITECTURAL AND ENGINEERING DESIGN REQUIREMENTS

	ELECTRICAL					MEDICAL GASES											HVAC										
						M	D				D	D	L														
ROOM CODE	LIGHT LEV	N	EM PWR	LT	N	C A	C A	L A	P A	M V	H V	L V	D E	O X	N O	N I	N	BL	AC	OA	TEMP SM	TEMP WN	R H	FL IN	FL FN	E X	N
BRIS1	300	B	RC	L	.	1	.	.	.	3	.	.	.	2	.	.	A	+-	6	2	24	24	.	90	.	Y	E
	1100	.			.												.				75	75					.
BRIT1	300	B	RC	L	.	1	.	.	.	.	.	.	.	.	.	.	.	-	12	2	24	24	.	90	.	Y	E
	1100	.			.												.				75	75					Q
BRIT2	300	B	RC	L	.	1	.	.	.	.	.	.	.	.	.	.	.	+	12	2	24	24	.	90	.	Y	E
	1100	.			.												.				75	75					.
BRLC1	100	C	.	.	U	1	.	.	.	1	.	.	.	1	.	.	A	0	4	2	24	24	.	90	.	.	.
	300	.			.												.				75	75					.
BRLC2	100	C	R	LS	.	1	.	.	.	2	.	.	.	2	.	.	A	0	4	2	24	24	.	90	.	.	.
	300	.			.												M				75	75					.
BRLC4	100	C	R	LS	.	2	.	.	.	4	.	.	.	4	.	.	A	0	4	2	24	24	.	90	.	.	.
	300	.			.												M				75	75					.
BRMS1	100	C	R1	.	.	1	.	.	.	1	.	.	.	1	.	.	A	0	4	2	24	24	.	90	.	.	.
	300	.			.												.				75	75					.
BRMS2	100	C	R1	LS	.	1	.	.	.	2	.	.	.	2	.	.	A	0	4	2	24	24	.	90	.	.	.
	300	.			.												M				75	75					.
BRMS4	100	C	R1	LS	.	2	.	.	.	4	.	.	.	4	.	.	A	0	4	2	24	24	.	90	.	.	.
	300	.			.												M				75	75					.
BRNP1	100	C	.	LS	.	1	.	.	.	1	.	.	.	1	.	.	A	0	6	2	24	24	.	90	.	.	.
	300	.			.												.				75	75					.
BRNP2	100	C	.	LS	.	1	.	.	.	1	.	.	.	1	.	.	A	0	4	2	24	24	.	90	.	.	.
	300	.			.												M				75	75					.
BRNP4	100	C	.	LS	.	2	.	.	.	2	.	.	.	2	.	.	A	0	4	2	24	24	.	90	.	.	.
	300	.			.												M				75	75					.
BRNP5	100	C	.	LS	.	1	.	.	.	1	.	.	.	1	.	.	A	0	6	2	24	24	.	90	.	.	.
	300	.			.												.				75	75					.
BRNP6	300	.	.	.	.	.	.	.	.	.	.	.	.	.	.	.	.	0	4	2	24	24	.	90	.	.	.
	.	.			.												.				75	75					.
BRNS1	.	.	.	.	.	.	.	.	.	.	.	.	.	.	.	.	.	-	2	.	24	24	.	.	.	Y	.
	.	.			.												.				75	75					.
BRNS2	.	.	.	.	.	.	.	.	.	.	.	.	.	.	.	.	.	-	2	.	24	24	.	.	.	Y	.
	.	.			.												.				75	75					.

APPENDIX A
ARCHITECTURAL AND ENGINEERING DESIGN REQUIREMENTS

STRU ROOM CODE LOAD	ROOM NAME	ARCHITECTURAL MATRL+FIN FL	WAL	CLG	CLG HT	DOOR SIZE	NOISE RM	NOISE SC	FLR
BRNS3	BEDROOM NURSE SERVER ICU/CCU	VT	GPT	AT1	2400	SP	30	40	3
		SV	GLG	AT2	8-0		35		60
BROR1	BEDROOM, ORTHOPEDICS, 1 BED	VT	GPT	AT1	2600	1200	30	40	3
		.	GVF	.	8-6	4-0	35		60
BROR2	BEDROOM, ORTHOPEDICS, 2 BEDS	VT	GPT	AT1	2600	1200	30	40	3
		.	GVF	.	8-6	4-0	35		60
BROR4	BEDROOM, ORTHOPEDICS, 4 BEDS	VT	GPT	AT1	2600	1200	30	40	3
		.	GVF	.	8-6	4-0	35		60
BRPB1	BEDROOM, PEDIATRICS, 1 BED	VT	GPT	AT1	2600	1200	35	40	3
		.	GVF	.	8-6	4-0	40		60
BRPB2	BEDROOM, PEDIATRICS, 2 BEDS	VT	GPT	AT1	2600	1200	35	40	3
		.	GVF	.	8-6	4-0	40		60
BRPC1	BEDROOM, PEDIATRICS, 1 CRIB	VT	GPT	AT1	2600	1200	35	40	3
		.	GVF	.	8-6	4-0	40		60
BRPC2	BEDROOM, PEDIATRICS, 2 CRIBS	VT	GPT	AT1	2600	1200	35	40	3
		.	GVF	.	8-6	4-0	40		60
BRPC4	BEDROOM, PEDIATRICS, 4 CRIBS	VT	GPT	AT1	2600	1200	35	40	3
		.	GVF	.	8-6	4-0	40		60
BRSD1	BEDROOM, STEP-DOWN, 1 BED	VT	GPT	AT1	2600	1200	30	40	3
		.	GVF	.	8-6	4-0	35		60
BRSD2	BEDROOM, STEP-DOWN, 2 BEDS	VT	GPT	AT1	2600	1200	30	40	3
		.	GVF	.	8-6	4-0	35		60
BRSD4	BEDROOM, STEP-DOWN, 4 BEDS	VT	GPT	AT1	2600	1200	30	40	3
		.	GVF	.	8-6	4-0	35		60
BX000	EXCHANGE AREA - EQUIP BY OTHERS	VT	GPT	AT1	2600	1200	35	40	3
		.	..	.	8-6	4-0	40		60
BX001	EXCHANGE VENDING AREA - UTILITY RQD	VT	GPT	AT1	2600	1200	35	50	C
		.	..	.	8-6	4-0	40		
CASH1	CASHIER	VT	GPT	AT1	2600	OPEN	35	50	3
		CP	GVF	.	8-6	OPEN	40		60
CHC01	CART HOLDING, CLEAN	VT	GPT	AT1	2400	900	35	40	5
		.	..	.	8-0	3-0	40		100

APPENDIX A
ARCHITECTURAL AND ENGINEERING DESIGN REQUIREMENTS

ROOM CODE	ELECTRICAL LIGHT LEV	ELECTRICAL LIGHT N	ELECTRICAL EM PWR PWR	ELECTRICAL EM PWR LT	ELECTRICAL EM PWR N	MEDICAL GASES CA	MEDICAL GASES CA	MEDICAL GASES LA	MEDICAL GASES PA	MEDICAL GASES MV	MEDICAL GASES HV	MEDICAL GASES LV	MEDICAL GASES DE	MEDICAL GASES OX	MEDICAL GASES NO	MEDICAL GASES NI	HVAC N	HVAC BL	HVAC AC	HVAC OA	HVAC TEMP SM	HVAC TEMP WN	HVAC RH	HVAC FL IN	HVAC FL FN	HVAC EX	HVAC N
BRNS3	.	.	.	.	.	.	.	.	.	.	.	.	.	.	.	.	.	-	2	.	24	24	.	.	.	Y	.
	.	.			.												.				75	75					.
BROR1	100	C	R1	LS	.	1	.	.	.	1	.	.	.	1	.	.	A	0	4	2	24	24	.	90	.	.	.
	300	.			.												.				75	75					.
BROR2	100	C	R1	LS	.	1	.	.	.	2	.	.	.	2	.	.	A	0	4	2	24	24	.	90	.	.	.
	300	.			.												M				75	75					.
BROR4	100	C	R1	LS	.	2	.	.	.	4	.	.	.	4	.	.	A	0	4	2	24	24	.	90	.	.	.
	300	.			.												.				75	75					.
BRPB1	100	C	R1	LS	.	1	.	.	.	1	.	.	.	1	.	.	A	0	4	2	24	24	.	90	.	.	.
	300	.			.												.				75	75					.
BRPB2	100	C	R1	LS	.	1	.	.	.	2	.	.	.	2	.	.	A	0	4	2	24	24	.	90	.	.	.
	300	.			.												.				75	75					.
BRPC1	100	C	R1	LS	.	1	.	.	.	1	.	.	.	1	.	.	A	0	4	2	24	24	.	90	.	.	.
	300	.			.												.				75	75					.
BRPC2	100	C	R1	LS	.	1	.	.	.	2	.	.	.	2	.	.	A	0	4	2	24	24	.	90	.	.	.
	300	.			.												.				75	75					.
BRPC4	100	C	R1	.	.	2	.	.	.	4	.	.	.	4	.	.	A	0	4	2	24	24	.	90	.	.	.
	300	.			.												.				75	75					.
BRSD1	100	C	R1	LS	.	1	.	.	.	3	.	.	.	2	.	.	A	0	4	2	24	24	.	90	.	.	.
	300	.			.												.				75	75					.
BRSD2	100	C	R1	LS	.	2	.	.	.	6	.	.	.	2	.	.	A	0	4	2	24	24	.	90	.	.	.
	300	.			.												.				75	75					.
BRSD4	100	C	R1	LS	.	1	.	.	.	3	.	.	.	2	.	.	A	0	4	2	24	24	.	90	.	.	.
	300	.			.												B				75	75					.
BX000	500	.	.	LE	.	.	.	.	.	.	.	.	.	.	.	.	.	0	4	1	24	24	.	.	.	.	.
	.	.			.												.				75	75					.
BX001	150	.	.	.	.	.	.	.	.	.	.	.	.	.	.	.	.	.	.	.	.	.	.	.	.	.	K
	.	.			.												.				.	.					.
CASH1	500	.	.	LE	.	.	.	.	.	.	.	.	.	.	.	.	.	0	4	1	26	21	.	.	.	.	.
	.	.			.												.				78	70					.
CHC01	50	.	.	.	.	.	.	.	.	.	.	.	.	.	.	.	.	+	4	1	26	21	.	80	.	.	.
	.	.			.												.				78	70					.

APPENDIX A
ARCHITECTURAL AND ENGINEERING DESIGN REQUIREMENTS

STRU ROOM CODE	ROOM NAME	ARCHITECTURAL MATRL+FIN FL	WAL	CLG	CLG HT	DOOR SIZE	NOISE RM	NOISE SC	FLR LOAD
CHS01	CART HOLDING, SOILED	VT	GLG	AT1	2400	900	35	40	5
		.	..	.	8-0	3-0	40		100
CLPE1	CLASSROOM, PATIENT EDUCATION	CP	GVF	AT1	2600	900	30	40	3
		.	..	.	8-6	3-0	40		60
CLR01	CLASSROOM, TABLE/CHAIR	CP	GVF	AT1	2600	900	25	45	3
		.	GPT	.	8-6	3-0	30		60
CLR02	CLASSROOM, WRITING ARM CHAIRS	CP	GVF	AT1	2600	900	25	45	3
		.	GPT	.	8-6	3-0	30		60
CLR03	CLASSROOM/LIBRARY TABLE/CHAIRS	CP	GVF	AT1	2600	900	25	45	3
		.	GPT	.	8-6	3-0	30		60
CLR04	CLASSROOM, 2 BED ROOM MOCK-UP	VT	GPT	AT1	2600	1200	25	45	3
		.	GVF	.	8-6	4-0	30		60
CLRS1	CLASSROOM SPEECH THERAPY	CP	GVF	AT1	2600	900	25	45	3
		.	GPT	.	8-6	3-0	30		60
CLSC1	CLASSROOM STUDENT CARREL, 1 CARREL	CP	GVF	AT1	2600	900	25	45	3
		.	GPT	.	8-6	3-0	30		60
COM01	COMMUNICATIONS CLINICAL EMS	VT	GPT	AT1	2400	900	35	40	3
		.	GVF	.	8-0	3-0	40		60
COM02	COMMUNICATIONS AMBULANCE DISPATCH	VT	GPT	AT1	2400	900	35	40	3
		.	GVF	.	8-0	3-0	40		60
COM03	COMMUNICATIONS ROOM-CENTRAL SECURIT	VT	GPT	AT1	2400	900	25	40	3
		.	..	.	8-0	3-0	30		60
CORRA	CORRIDORS, ADMIN	VT	GVF	AT1	2400	900	35	45	5
		CP	..	.	8-0	3-0	40		100
CORRC	CORRIDORS, CLINICS	VT	GVF	AT1	2400	900	35	45	5
		CP	..	.	8-0	3-0	40		100
CORRH	CORRIDORS, HEAVY CARTS	VT	GVF	AT1	2400	C	35	45	5
		.	..	.	8-0		40		100
CORRW	CORRIDORS, WARDS	VT	GVF	AT1	2600	C	35	45	4
		CP	..	.	8-6		40		80
CRA01	CONFERENCE ROOM, ADMINISTRATIVE	CP	GVF	AT1	2600	900	25	40	3
		.	GPT	.	8-6	3-0	30		60

APPENDIX A
ARCHITECTURAL AND ENGINEERING DESIGN REQUIREMENTS

	ELECTRICAL					MEDICAL GASES											HVAC								
						M	D				D	D	L												
ROOM	LIGHT		EM PWR			C	C	L	P	M	H	L	D	O	N	N				TEMP		R	FL		E	
CODE	LEV	N	PWR	LT	N	A	A	A	A	V	V	V	E	X	O	I	N	BL	AC	OA	SM	WN	H	IN	FN	X	N
CHS01	50	.	.	.	.	.	.	.	.	.	.	.	.	.	.	.	.	-	10	1	26	21	.	80	.	Y	.
	.	.			.												.				78	70					.
CLPE1	700	F	.	LE	.	.	.	.	.	.	.	.	.	.	.	.	.	0	6	*	26	21	.	.	.	.	.
	.	.			.												.				78	70					.
CLR01	700	F	.	LE	.	.	.	.	.	.	.	.	.	.	.	.	.	0	6	*	26	21	.	.	.	.	.
	.	.			.												.				78	70					.
CLR02	700	F	.	LE	.	.	.	.	.	.	.	.	.	.	.	.	.	0	6	*	26	21	.	.	.	.	.
	.	.			.												.				78	70					.
CLR03	700	F	.	LE	.	.	.	.	.	.	.	.	.	.	.	.	.	0	6	*	26	21	.	.	.	.	.
	.	.			.												.				78	70					.
CLR04	100	.	.	LE	.	.	.	.	.	.	.	.	.	.	.	.	.	0	12	*	26	21	.	.	.	.	.
	300	.			.												.				78	70					.
CLRS1	700	F	.	LE	.	.	.	.	.	.	.	.	.	.	.	.	.	0	6	*	26	21	.	.	.	.	.
	.	.			.												.				78	70					.
CLSC1	700	F	.	LE	.	.	.	.	.	.	.	.	.	.	.	.	.	0	6	*	26	21	.	.	.	.	.
	.	.			.												.				78	70					.
COM01	200	.	.	L	E	.	.	.	.	.	.	.	.	.	.	.	.	0	4	1	26	21	.	.	.	.	.
	.	.			.												.				78	70					.
COM02	200	.	.	L	E	.	.	.	.	.	.	.	.	.	.	.	.	0	4	1	26	21	.	.	.	.	.
	.	.			.												.				78	70					.
COM03	200	.	R	L	.	.	.	.	.	.	.	.	.	.	.	.	.	0	4	1	26	21	.	.	.	.	.
	.	.			.												.				78	70					.
CORRA	150	.	.	LE	.	.	.	.	.	.	.	.	.	.	.	.	.	0	4	1	26	20	.	.	.	.	.
	.	.			.												.				78	68					.
CORRC	150	.	.	LE	.	.	.	.	.	.	.	.	.	.	.	.	.	0	4	1	26	20	.	.	.	.	.
	.	.			.												.				78	68					.
CORRH	150	.	.	LE	.	.	.	.	.	.	.	.	.	.	.	.	.	0	4	1	26	20	.	.	.	.	.
	.	.			.												.				78	68					.
CORRW	150	C	.	LE	.	.	.	.	.	.	.	.	.	.	.	.	.	0	4	1	26	20	.	.	.	.	.
	50	.			.												.				78	68					.
CRA01	300	.	.	LE	.	.	.	.	.	.	.	.	.	.	.	.	.	0	6	*	26	21	.	.	.	.	.
	.	.			.												.				78	70					.

APPENDIX A
ARCHITECTURAL AND ENGINEERING DESIGN REQUIREMENTS

STRU ROOM CODE LOAD	ROOM NAME	ARCHITECTURAL MATRL+FIN FL	WAL	CLG	CLG HT	DOOR SIZE	NOISE RM	NOISE SC	FLR
CRC01	CONFERENCE ROOM, COMMANDERS	CP	GVF	AT1	2600	900	25	40	3
		.	GPT	.	8-6	3-0	30		60
CRCS1	CONFERENCE RM, CLINICAL SERVICES,SM	CP	GVF	AT1	2600	900	25	40	3
		.	GPT	.	8-6	3-0	30		60
CRCS2	CONFERENCE RM, CLINICAL SERVICES,LG	CP	GVF	AT1	2600	900	25	40	3
		.	GPT	.	8-6	3-0	30		60
CRR01	CONFERENCE ROOM, RADIOLOGY, SM		GVF	AT1	2600	900	25	40	3
		CP	GPT	GPT	8-6	3-0	30		60
CRR02	CONFERENCE ROOM, RADIOLOGY, LG	CP	GVF	AT1	2600	900	25	40	3
		.	GPT	GPT	8-6	3-0	30		60
CRWD1	CONFERENCE ROOM, WARD	CP	GVF	AT1	2600	900	25	40	3
		.	..	.	8-6	3-0	30		60
CSBG1	CENTRAL STERILE BENCH-TOP ETO	SV	GLG	AT2	2700	900	35	40	5
		ET	..	GLG	9-0	3-0	40		100
CSBR1	CENTRAL STERILE BREAKOUT ROOM	SV	GLG	AT2	2700	900	35	40	3
		ET	..	GLG	9-0	3-0	40		60
CSCL1	CENTRAL STERILE CLINIC DECON SMALL	SV	GLG	AT2	2700	900	35	40	3
		ET	..	GLG	9-0	3-0	40		60
CSCL2	CENTRAL STERILE CLINIC DECON LARGE	SV	GLG	AT2	2700	900	35	40	3
		ET	..	GLG	9-0	3-0	40		60
CSCL3	CENTRAL STERILE CLINIC STER 1 SMALL	SV	GLG	AT2	2700	900	35	40	3
		ET	..	GLG	9-0	3-0	40		60
CSCL4	CENTRAL STERILE CLINIC STER 2 SMALL	SV	GLG	AT2	2700	900	35	40	3
		ET	..	GLG	9-0	3-0	40		60
CSCL5	CENTRAL STERILE CLINIC STER 1 LARGE	SV	GLG	AT2	2700	900	35	40	3
		ET	..	GLG	9-0	3-0	40		60
CSCL6	CENTRAL STERILE CLINIC STER 2 LARGE	SV	GLG	AT2	2700	900	35	40	3
		ET	..	GLG	9-0	3-0	40		60
CSCL7	CENTRAL STERILE CLINIC STER STR SM	SV	GLG	AT2	2700	900	35	40	3
		ET	..	GLG	9-0	3-0	40		60
CSCL8	CENTRAL STERILE CLINIC STER STR LG	SV	GLG	AT2	2700	B	35	40	6
		ET	..	GLG	9-0		40		125

APPENDIX A
ARCHITECTURAL AND ENGINEERING DESIGN REQUIREMENTS

	ELECTRICAL					MEDICAL GASES											HVAC									
						M	D				D	D	L													
ROOM	LIGHT		EM PWR			C	C	L	P	M	H	L	D	O	N	N				TEMP		R	FL		E	
CODE	LEV	N	PWR	LT	N	A	A	A	A	V	V	V	E	X	O	I	N	BL	AC	OA	SM	WN	H	IN	FN	X	N
CRC01	300	.	.	LE	.	.	.	.	.	.	.	.	.	.	.	.	.	0	6	*	26	21	.	.	.	.	.
	.	.			.												.				78	70					.
CRCS1	300	.	.	LE	.	.	.	.	.	.	.	.	.	.	.	.	.	0	6	*	26	21	.	.	.	.	.
	.	.			.												.				78	70					.
CRCS2	300	.	.	LE	.	.	.	.	.	.	.	.	.	.	.	.	.	0	6	*	26	21	.	.	.	.	.
	.	.			.												.				78	70					.
CRR01	300	F	.	LE	.	.	.	.	.	.	.	.	.	.	.	.	.	0	6	*	26	21	.	.	.	.	.
	.	.			.												.				78	70					.
CRR02	300	F	.	LE	.	.	.	.	.	.	.	.	.	.	.	.	.	0	6	*	26	21	.	.	.	.	.
	.	.			.												.				78	70					.
CRWD1	300	.	.	LE	.	.	.	.	.	.	.	.	.	.	.	.	.	0	6	*	26	21	.	.	.	.	.
	.	.			.												.				78	70					.
CSBG1	700	.	.	.	U	.	.	.	.	.	.	.	.	.	.	.	.	-	10	.	26	20	.	.	.	Y	G
	.	.			.												.				78	68					M
CSBR1	700	.	.	.	U	.	.	.	.	.	.	.	.	.	.	.	.	.	.	.	26	20	.	.	.	Y	.
	.	.			.												.				78	68					.
CSCL1	700	.	.	.	U	1	.	.	.	1	.	.	.	1	.	.	.	-	10	2.5	26	20	.	.	.	.	M
	.	.			.												.				78	78					.
CSCL2	700	.	.	.	U	1	.	.	.	1	.	.	.	1	.	.	I	-	10	2.5	26	20	.	.	.	Y	M
	.	.			.												.				78	68					.
CSCL3	700	.	.	.	U	.	.	.	.	.	.	.	.	.	.	.	.	+	10	2.5	26	20	.	80	.	.	.
	.	.			.												.				78	68					.
CSCL4	700	.	.	.	U	.	.	.	.	.	.	.	.	.	.	.	.	+	10	2.5	26	20	.	80	.	.	.
	.	.			.												.				78	68					.
CSCL5	700	.	.	.	U	.	.	.	.	.	.	.	.	.	.	.	.	+	10	2.5	26	20	.	80	.	.	.
	.	.			.												.				78	68					.
CSCL6	700	.	.	.	U	.	.	.	.	.	.	.	.	.	.	.	.	+	10	2.5	26	20	.	80	.	.	.
	.	.			.												.				78	68					.
CSCL7	700	.	.	.	.	.	.	.	.	.	.	.	.	.	.	.	.	+	10	2.5	26	20	.	80	.	.	.
	.	.			.												.				78	68					.
CSCL8	700	.	.	.	.	.	.	.	.	.	.	.	.	.	.	.	.	+	6	1.5	26	20	.	.	.	.	.
	.	.			.												.				78	68					.

APPENDIX A
ARCHITECTURAL AND ENGINEERING DESIGN REQUIREMENTS

STRU ROOM CODE LOAD	ROOM NAME	ARCHITECTURAL MATRL+FIN FL	WAL	CLG	CLG HT	DOOR SIZE	NOISE RM	SC	FLR
CSCQ1	CENTRAL STERILE CART QUEUING	SV	GLG	AT2	2700	B	35	40	5
		ET	..	GLG	9-0		40		100
CSCR1	CENTRAL STERILE CART RECEIVING	SV	GLG	AT2	2700	900	35	40	5
		ET	..	GLG	9-0	3-0	40		100
CSDS1	CENTRAL STERILE DBL WORK SINK/CNTR	SV	GLG	AT2	2700	900	35	40	3
		ET	..	GLG	9-0	3-0	40		60
CSEW1	CENTRAL STERILE EQUIP WASH & DRY	QT	GLG	AT2	2700	900	35	40	5
		.	..	GLG	9-0	3-0	40		100
CSHA1	CENTRAL STERILE HOLDING AREA	SV	GLG	AT2	2700	900	35	40	5
		ET	..	GLG	9-0	3-0	40		100
CSIA1	CENTRAL STERILE INSTRUMENT ASSEMBLY	SV	GLG	AT2	2700	900	35	40	5
		ET	..	GLG	9-0	3-0	40		100
CSIS1	CENTRAL STERILE INSTRUMENT STORAGE	SV	GLG	AT2	2700	900	35	40	6
		ET	..	GLG	9-0	3-0	40		125
CSLG1	CENTRAL STERILE LARGE GAS 1 DOOR	SV	GLG	AT2	2700	900	35	40	5
		ET	..	GLG	9-0	3-0	40		100
CSLG2	CENTRAL STERILE LARGE GAS 2 DOOR	SV	GLG	AT2	2700	900	35	40	5
		ET	..	GLG	9-0	3-0	40		100
CSLS1	CENTRAL STERILE LARGE STEAM 1 DOOR	SV	GLG	AT2	2700	900	35	40	5
		ET	..	GLG	9-0	3-0	40		100
CSLS2	CENTRAL STERILE LARGE STEAM 2 DOOR	SV	GLG	AT2	2700	900	35	40	5
		ET	..	GLG	9-0	3-0	40		100
CSMG1	CENTRAL STERILE MEDIUM GAS 1 DOOR	SV	GLG	AT2	2700	900	35	40	5
		ET	..	GLG	9-0	3-0	40		100
CSMG2	CENTRAL STERILE MEDIUM GAS 2 DOOR	SV	GLG	AT2	2700	900	35	40	5
		ET	..	GLG	9-0	3-0	40		100
CSMS1	CENTRAL STERILE MEDIUM STEAM 1 DOOR	SV	GLG	AT2	2700	900	35	40	5
		ET	..	GLG	9-0	3-0	40		100
CSMS2	CENTRAL STERILE MEDIUM STEAM 2 DOOR	SV	GLG	AT2	2700	900	35	40	5
		ET	..	GLG	9-0	3-0	40		100
CSSG1	CENTRAL STERILE SMALL GAS 1 DOOR	SV	GLG	AT2	2700	900	35	40	5
		ET	..	GLG	9-0	3-0	40		100

APPENDIX A
ARCHITECTURAL AND ENGINEERING DESIGN REQUIREMENTS

	ELECTRICAL					MEDICAL GASES											HVAC									
						M	D				D	D	L													
ROOM	LIGHT		EM PWR			C	C	L	P	M	H	L	D	O	N	N				TEMP		R	FL		E	
CODE	LEV	N	PWR	LT	N	A	A	A	A	V	V	V	E	X	O	I	N	BL	AC	OA	SM	WN	H	IN	FN	X	N
CSCQ1	50	.	.	.	.	.	.	.	.	.	.	.	.	.	.	.	.	+	6	1	26	20	.	.	.	.	.
	.	.			.												.				78	68					.
CSCR1	100	.	.	.	.	.	.	.	.	.	.	.	.	.	.	.	.	+	6	1	26	20	.	.	.	.	.
	.	.			.												.				78	68					.
CSDS1	700	.	.	.	U	.	.	.	.	.	.	.	.	.	.	.	.	-	10	2	26	20	.	.	.	.	.
	.	.			.												.				78	68					.
CSEW1	700	.	.	.	U	.	.	.	.	.	.	.	.	.	.	.	.	-	10	2	26	20	.	.	.	Y	.
	.	.			.												.				78	68					.
CSHA1	300	.	.	.	.	.	.	.	.	.	.	.	.	.	.	.	.	+	6	1.5	26	20	.	.	.	.	.
	.	.			.												.				78	68					.
CSIA1	1100	.	.	.	U	1	.	.	.	1	.	.	.	1	.	.	I	+	6	1.5	26	20	.	80	.	.	.
	.	.			.												.				78	68					.
CSIS1	300	.	.	.	U	.	.	.	.	.	.	.	.	.	.	.	.	+	6	1.5	26	20	.	.	.	.	.
	.	.			.												.				78	68					.
CSLG1	300	.	.	.	U	.	.	.	.	.	.	.	.	.	.	.	.	-	10	2.5	26	20	.	80	.	Y	.
	.	.			.												.				78	68					.
CSLG2	300	.	.	.	U	.	.	.	.	.	.	.	.	.	.	.	.	-	10	2.5	26	20	.	.	.	Y	F
	.	.			.												.				78	68					.
CSLS1	300	.	.	.	U	.	.	.	.	.	.	.	.	.	.	.	.	-	10	2.5	26	20	.	.	.	Y	.
	.	.			.												.				78	68					.
CSLS2	300	.	.	.	U	.	.	.	.	.	.	.	.	.	.	.	.	-	10	2.5	26	20	.	.	.	Y	L
	.	.			.												.				78	68					.
CSMG1	300	.	.	.	U	.	.	.	.	.	.	.	.	.	.	.	.	-	10	2.5	26	20	.	.	.	Y	L
	.	.			.												.				78	68					.
CSMG2	300	.	.	.	U	.	.	.	.	.	.	.	.	.	.	.	.	-	10	2.5	26	20	.	.	.	Y	L
	.	.			.												.				78	68					.
CSMS1	300	.	.	.	U	.	.	.	.	.	.	.	.	.	.	.	.	-	10	2.5	26	20	.	.	.	Y	L
	.	.			.												.				78	68					.
CSMS2	300	.	.	.	U	.	.	.	.	.	.	.	.	.	.	.	.	-	10	2.5	26	20	.	.	.	Y	L
	.	.			.												.				78	68					.
CSSG1	300	.	.	.	U	.	.	.	.	.	.	.	.	.	.	.	.	-	10	2.5	26	20	.	.	.	Y	L
	.	.			.												.				78	68					.

APPENDIX A
ARCHITECTURAL AND ENGINEERING DESIGN REQUIREMENTS

STRU ROOM CODE LOAD	ROOM NAME	ARCHITECTURAL MATRL+FIN FL	WAL	CLG	CLG HT	DOOR SIZE	NOISE RM	NOISE SC	FLR
CSSG2	CENTRAL STERILE SMALL GAS 2 DOOR	SV	GLG	AT2	2700	900	35	40	5
		ET	..	GLG	9-0	3-0	40		100
CSSS1	CENTRAL STERILE SMALL STEAM 1 DOOR	SV	GLG	AT2	2700	900	35	40	5
		ET	..	GLG	9-0	3-0	40		100
CSSS2	CENTRAL STERILE SMALL STEAM 2 DOOR	SV	GLG	AT2	2700	900	35	40	5
		ET	..	GLG	9-0	3-0	40		100
CSTW1	CENTRAL STERILE TABLE AND WORK SPC	SV	GLG	AT2	2700	900	35	40	5
		ET	..	GLG	9-0	3-0	40		100
CSUC1	CENTRAL STERILE ULTRASONIC CLEANING	SV	GLG	AT2	2700	900	35	40	5
		ET	..	GLG	9-0	3-0	40		100
CSWM1	CENTRAL STERILE WATER MAKEUP SINK	SV	GLG	AT2	2700	900	35	40	5
		ET	..	GLG	9-0	3-0	40		100
CSWP1	CENTRAL STERILE WASHER/PAST & DRY	SV	GLG	AT2	2700	900	35	40	C
		ET	..	GLG	9-0	3-0	40		C
CSWS1	CENTRAL STERILE WASHER STER MANUAL	SV	GLG	AT2	2700	900	35	40	5
		ET	..	GLG	9-0	3-0	40		100
CSWS2	CENTRAL STERILE WASHER STER AUTO	SV	GLG	AT2	2700	900	35	40	5
		ET	..	GLG	9-0	3-0	40		100
CWSH1	CART WASH, MANUAL	QT	GCT	GLG	2700	B	35	40	5
		.	..	.	9-0	.	40		100
CWSH2	CART WASH, AUTOMATED WASHER	QT	GCT	GLG	2700	900	35	40	C
		.	..	.	9-0	3-0	40		C
DAYR1	DAYROOM, WARD	CP	GVF	AT1	2600	1200	35	40	3
		.	GPT	.	8-6	4-0	40		60
DAYR2	DAYROOM, PEDIATRICS	CP	GVF	AT1	2600	1200	35	40	3
		.	GPT	.	8-6	4-0	40		60
DNPB1	DENT PROSTHETICS, ORTHODONTIC LAB	SV	GLG	AT1	2700	900	35	40	3
		VT	GPT	.	9-0	3-0	40		60
DNPC1	DENT ROOM CERAMICS	SV	GLG	AT1	2700	1050	35	50	3
		VT	GPT	.	9-0	3-6	40		60
DNPF1	DENT PROSTHETICS LAB, FULL FUNCT'N	SV	GLG	AT1	2700	400	35	40	3
		VT	GPT	.	9-0	3-0	40		60

APPENDIX A
ARCHITECTURAL AND ENGINEERING DESIGN REQUIREMENTS

	ELECTRICAL					MEDICAL GASES											HVAC									
						M	D				D	D	L													
ROOM	LIGHT		EM PWR			C	C	L	P	M	H	L	D	O	N	N				TEMP		R	FL		E	
CODE	LEV	N	PWR	LT	N	A	A	A	A	V	V	V	E	X	O	I	N	BL	AC	OA	SM	WN	H	IN	FN	X	N
CSSG2	300	.	.	.	U	.	.	.	.	.	.	.	.	.	.	.	.	-	10	2.5	26	20	.	.	.	Y	L
	.	.			.												.				78	68					.
CSSS1	300	.	.	.	U	.	.	.	.	.	.	.	.	.	.	.	.	-	10	2.5	26	20	.	.	.	Y	L
	.	.			.												.				78	68					.
CSSS2	300		.	.	U	.	.	.										-	10	2.5	26	20	.	.	.	Y	L
	.	.			.												.				78	68					.
CSTW1	700	.	.	.	U	.	.	.	.	.	.	.	.	.	.	.	.	+	6	1.5	26	20	.	80	.	.	.
	.	.			.												.				78	68					.
CSUC1	700	.	.	.	U	.	.	.	.	.	.	.	.	.	.	.	.	-	6	1.5	26	20	.	80	.	Y	.
	.	.			.												.				78	68					.
CSWM1	500	.	.	.	U	.	.	.	.	.	.	.	.	.	.	.	.	-	6	1.5	26	20	.	80	.	Y	.
	.	.			.												.				78	68					.
CSWP1	500	.	.	.	U	.	.	.	.	.	.	.	.	.	.	.	.	-	10	2.5	26	20	.	.	.	Y	L
	.	.			.												.				78	68					.
CSWS1	500	.	.	.	U	.	.	.	.	.	.	.	.	.	.	.	.	-	10	2.5	26	20	.	.	.	Y	L
	.	.			.												.				78	68					.
CSWS2	500	.	.	.	U	.	.	.	.	.	.	.	.	.	.	.	.	-	10	2.5	26	20	.	80	.	Y	.
	.	.			.												.				78	28					.
CWSH1	300	.	.	.	.	.	.	.	.	.	.	.	.	.	.	.	.	-	10	2.5	26	20	.	.	.	Y	L
	.	.			.												.				78	68					.
CWSH2	300	.	.	.	.	.	.	.	.	.	.	.	.	.	.	.	.	-	10	2.5	26	20	.	.	.	Y	L
	.	.			.												.				78	68					.
DAYR1	150	.	.	LE	.	.	.	.	.	.	.	.	.	.	.	.	.	0	6	2	26	20	.	80	.	.	.
	.	.			.												.				78	68					.
DAYR2	150	.	.	LE	.	.	.	.	.	1	.	.	.	1	.	.	B	0	6	2	26	20	.	80	.	.	.
	.	.			.												.				78	68					.
DNPB1	700	C	.	.	.	.	1	1	1	.	.	.	1	.	.	.	B	-	6	2	26	20	.	.	.	Y	L
	.	.			.												.				78	68					.
DNPC1	700	C	.	.	.	.	1	1	1	.	.	.	1	.	.	.	B	+	10	2.5	26	20	.	80	.	Y	M
	.	.			.												.				78	68					.
DNPF1	700	.	.	.	.	.	1	1	1	.	.	.	1	.	.	.	B	-	10	2.5	26	20	.	80	.	Y	M
	.	.			.												.				78	68					.

APPENDIX A
ARCHITECTURAL AND ENGINEERING DESIGN REQUIREMENTS

STRU ROOM CODE LOAD	ROOM NAME	ARCHITECTURAL MATRL+FIN FL	WAL	CLG	CLG HT	DOOR SIZE	NOISE RM	NOISE SC	FLR
DNPL1	DENT PROSTHETICS LAB, LIMITED	SV	GLG	AT1	2700	900	35	40	3
		VT	GPT	.	9-0	3-0	40		60
DNRS1	DENT REPAIR SHOP PER MAN	SV	GLG	AT1	2700	900	35	40	3
		VT	GPT	.	9-0	3-0	40		60
DNSA1	DENTAL SUPPORT SUBSTERILE	SV	GLG	AT1	2600	900	35	40	3
		VT	GPT	.	8-6	3-0	40		60
DNSA2	DENTAL SUPPORT PROSTHETIC	SV	GLG	AT1	2600	900	35	40	3
		VT	GPT	.	8-6	3-0	40		60
DNSB1	DENTAL SUPPORT ORTHODONTICS	SV	GLG	AT1	2600	900	35	40	3
		VT	GPT	.	8-6	3-0	40		60
DNSC1	DENTAL, STERILIZATION, SMALL	SV	GLG	AT2	2600	900	30	40	3
		ET	..	.	8-6	3-0	35		60
DNSC2	DENTAL, STERILIZATION, MEDIUM	SV	GLG	AT2	2600	900	30	40	3
		ET	..	.	8-6	3-0	35		60
DNSC3	DENTAL, STERILIZATION, LARGE	SV	GLG	AT2	2600	900	30	40	3
		ET	..	.	8-6	3-0	35		60
DNSP1	DENTAL SELF PREP AREA	SV	GLG	AT1	2600	900	30	40	3
		.	GPT	.	8-6	3-0	35		60
DNSS1	DENTAL SUPPORT SUBSTERILE	SV	GLG	AT1	2600	900	30	40	3
		VT	..	.	8-6	3-0	35		60
DNTB1	DENTAL TREATMENT RM, ORTHODONTICS	SV	GLG	AT1	2600	900	30	40	3
		.	..	.	8-6	3-0	35		60
DNTC1	DENTAL TREATMENT RM, COMPREHENSIVE	SV	GLG	AT1	2600	900	30	40	3
		.	..	.	8-6	3-0	35		60
DNTE1	DENTAL TREATMENT RM, ENDODONTICS	SV	GLG	AT1	2600	900	30	40	3
		.	GPT	.	8-6	3-0	35		60
DNTG1	DENTAL TREATMENT RM, GENERAL	SV	GLG	AT1	2600	900	30	40	3
		.	GPT	.	8-6	3-0	35		60
DNTG2	DENTAL TREATMENT RM, ORAL HYGIENE	SV	GLG	AT1	2600	900	30	40	3
		.	GPT	.	8-6	3-0	35		60
DNTG3	DENTAL TREATMENT RM, PATHOLOGY	SV	GLG	AT1	2600	900	30	40	3
		.	GPT	.	8-6	3-0	35		60

APPENDIX A
ARCHITECTURAL AND ENGINEERING DESIGN REQUIREMENTS

	ELECTRICAL					MEDICAL GASES											HVAC										
						M	D				D	D	L														
ROOM	LIGHT		EM PWR			C	C	L	P	M	H	L	D	O	N	N				TEMP		R	FL		E	
CODE	LEV	N	PWR	LT	N	A	A	A	A	V	V	V	E	X	O	I	N	BL	AC	OA	SM	WN	H	IN	FN	X	N
DNPL1	700	.	.	.	.	.	1	1	1	.	.	.	1	.	.	.	B	-	10	2.5	26	20	.	80	.	Y	M
	.	.			.												.				78	68					.
DNRS1	700	.	.	.	.	.	1	1	1	.	.	1	1	.	.	.	B	-	10	2.5	26	20	.	80	.	Y	M
	.	.			.												.				78	68					.
DNSA1	500	.	.	.	.	.	1	2	.	.	.	1	1	.	.	.	B	0	6	2	26	20	.	.	.	.	.
	.	.			.												.				78	68					.
DNSA2	500	.	.	.	.	.	1	2	.	.	.	1	1	.	.	.	B	0	6	2	26	20	.	.	.	.	.
	.	.			.												.				78	68					.
DNSB1	500	.	.	.	.	.	1	2	.	.	.	1	1	.	.	.	B	0	6	2	26	20	.	.	.	.	.
	.	.			.												.				78	68					.
DNSC1	700	.	.	.	U	.	2	.	.	.	.	2	.	.	.	.	B	+	6	2	24	20	.	80	.	.	.
	.	.			.												.				75	68					.
DNSC2	700	.	.	.	U	.	2	.	.	.	.	2	.	.	.	.	B	+	6	2	24	20	.	80	.	.	.
	.	.			.												.				75	68					.
DNSC3	700	.	.	.	U	.	2	.	.	.	.	2	.	.	.	.	B	+	6	2	24	20	.	80	.	.	.
	.	.			.												.				75	68					.
DNSP1	500	.	.	.	.	.	.	.	.	.	.	.	.	.	.	.	.	0	6	2	26	20	.	.	.	.	.
	.	.			.												.				78	68					.
DNSS1	500	.	.	.	.	.	1	2	.	.	.	1	1	.	.	.	B	0	6	2	26	20	.	80	.	.	.
	.	.			.												.				78	68					.
DNTB1	1600	D	.	.	U	.	2	.	.	.	.	2	.	1	.	.	.	0	6	2	24	20	.	.	.	.	.
	.	F			.												.				75	68					.
DNTC1	1600	D	.	.	U	.	2	.	.	.	1	2	.	1	1	1	D	++	12	3	24	20	.	.	.	.	I
	.	F			.												N				75	68					.
DNTE1	1600	D	.	.	U	1	2	.	.	.	1	2	.	1	1	.	D	++	12	3	26	20	.	.	.	.	I
	.	F			.												.				78	68					.
DNTG1	1600	D	.	.	U	.	2	.	.	.	.	2	.	1	.	.	.	0	6	2	24	20	.	.	.	.	I
	.	F			.												.				75	68					.
DNTG2	1600	D	.	.	U	.	2	.	.	.	.	2	.	1	.	.	.	0	6	2	24	20	.	.	.	.	.
	.	F			.												.				75	68					.
DNTG3	1600	D	.	.	U	.	2	.	.	.	.	2	.	1	.	.	.	0	6	2	24	20	.	.	.	.	.
	.	F			.												.				75	68					.

APPENDIX A
ARCHITECTURAL AND ENGINEERING DESIGN REQUIREMENTS

STRU ROOM CODE LOAD	ROOM NAME	ARCHITECTURAL MATRL+FIN FL	WAL	CLG	CLG HT	DOOR SIZE	NOISE RM	SC	FLR
DNTP1	DENTAL TREATMENT RM, PROSTHODONTICS	SV	GLG	AT1	2600	900	30	40	3
		.	..	.	8-6	3-0	35		60
DNTP2	DENTAL TREATMENT RM, PERIODONTICS	SV	GLG	AT1	2600	900	30	40	3
		.	..	.	8-6	3-0	35		60
DNTP3	DENTAL TREATMENT RM, PEDIATRICS	SV	GLG	AT1	2600	900	30	40	3
		.	..	.	8-6	3-0	35		60
DNTS1	DENTAL TREATMENT RM, ORAL SURGERY	SV	GLG	GLG	2600	900	30	40	3
		.	..	.	8-6	3-0	35		60
DNTS2	DENT TREATMENT ORAL SURGERY SUPPORT	SV	GLG	AT1	2600	900	30	40	3
		.	..	.	8-6	3-0	35		60
DNTT1	DENTAL TREATMENT RM, TRAINING	SV	GLG	AT1	2600	900	30	40	3
		.	..	.	8-6	3-0	35		60
DNTXX	DENTAL RECOVERY	SV	GLG	AT1	2600	900	30	40	3
		.	..	.	8-6	3-0	35		60
DNWA1	DENTAL WORK AREA CLINICAL	SV	GLG	AT1	2600	900	30	40	3
		.	..	.	8-6	3-0	35		60
DNXC1	DENT XRAY CEPHALOMETRICS	VT	GLG	AT1	2600	900	30	40	3
		SV	GPT	.	8-6	3-0	35		60
DNXD1	DENT XRAY DUAL(INTRA/PANO)	VT	GLG	AT1	2600	900	30	40	3
		SV	GPT	.	8-6	3-0	35		60
DNXF1	DENT XRAY FILM PROCESSING AUTO 1 PR	SV	GLG	AT1	2400	SP	30	40	3
		VT	GPT	.	8-0		35		60
DNXF2	DENT XRAY FILM PROCESSING AUTO 2 PR	SV	GLG	AT1	2400	900	30	40	3
		VT	GPT	.	8-0	3-0	35		60
DNXI1	DENT XRAY INTRAORAL	SV	GLG	AT1	2600	900	30	40	3
		.	GPT	.	8-6	3-0	35		60
DNXR1	DENT XRAY VIEWING	SV	GLG	AT1	2400	900	30	40	3
		.	CPT	.	8-0	3-0	35		60
DOCK1	LOADING DOCK	CS	SSP	SSP	VAR	I	.	.	10
		.	..	.	VAR	.	.		200
DR001	DRESSING ROOM/CUBICLE	VT	GPT	AT1	2400	900	25	40	3
		CP	..	.	8-0	3-0	30		60

APPENDIX A
ARCHITECTURAL AND ENGINEERING DESIGN REQUIREMENTS

	ELECTRICAL					MEDICAL GASES											HVAC									
						M	D				D	D	L													
ROOM	LIGHT		EM PWR			C	C	L	P	M	H	L	D	O	N	N				TEMP		R	FL		E	
CODE	LEV	N	PWR	LT	N	A	A	A	A	V	V	V	E	X	O	I	N	BL	AC	OA	SM	WN	H	IN	FN	X	N
DNTP1	1600	D	.	.	U	.	2	1	.	.	.	2	.	1	.	.	L	0	6	2	24	20	.	.	.	.	.
	.	F			.												.				75	68					.
DNTP2	1600	D	.	.	U	.	2	.	.	.	1	2	.	1	1	.	D	++	12	3	20	24	.	90	.	.	I
	.	F			.												.				68	75					.
DNTP3	1600	D	.	.	U	.	2	.	.	.	1	2	.	1	1	.	D	++	12	3	24	20	.	.	.	.	I
	.	F			.												.				75	68					.
DNTS1	2100	D	.	.	U	.	2	.	.	.	1	2	.	1	1	1	N	++	12	3	20	26	.	90	.	.	I
	.	F			.												D				68	78					.
DNTS2	700	.	.	.	U	.	.	.	.	.	.	.	.	.	.	.	.	0	6	2	24	20	.	80	.	.	.
	.	.			.												.				75	68					.
DNTT1	1600	D	.	.	U	.	2	1	.	.	1	2	1	1	1	1	D	++	12	3	24	20	.	.	.	.	I
	.	F			.												L				75	68					.
DNTXX	300	B	.	.	U	.	1	.	.	.	1	.	.	1	.	.	.	+	6	2	24	20	.	.	.	.	.
	.	.			.												.				75	68					.
DNWA1	700	.	.	.	.	.	1	1	1	.	.	1	1	.	.	.	B	0	6	2	24	20	.	.	.	.	.
	.	.			.												.				75	68					.
DNXC1	100	A	.	.	.	.	.	.	.	.	.	.	.	.	.	.	.	+	6	2	24	20	.	.	.	.	.
	.	.			.												.				75	68					.
DNXD1	100	A	.	.	.	.	.	.	.	.	.	.	.	.	.	.	.	+	6	2	24	20	.	.	.	.	.
	.	.			.												.				75	68					.
DNXF1	200	G	.	.	.	.	.	.	.	.	.	.	.	.	.	.	.	-	10	2.5	24	20	.	.	.	Y	.
	.	.			.												.				75	68					.
DNXF2	200	G	.	.	.	.	.	.	.	.	.	.	.	.	.	.	.	-	10	2.5	24	20	.	.	.	Y	.
	.	.			.												.				75	68					.
DNXI1	100	A	.	.	.	.	.	.	.	.	.	.	.	.	.	.	.	+	6	2	24	20	.	.	.	.	.
	.	.			.												.				75	68					.
DNXR1	300	.	.	.	.	.	.	.	.	.	.	.	.	.	.	.	.	+	6	2	24	20	.	.	.	.	.
	.	.			.												.				75	68					.
DOCK1	200	.	.	.	.	.	.	.	.	.	.	.	.	.	.	.	.	.	.	.	.	.	.	.	.	.	.
	.	.			.												.				.	.					.
DR001	100	.	.	.	.	.	.	.	.	.	.	.	.	.	.	.	.	0	4	2	26	20	.	.	.	.	.
	.	.			.												.				78	68					.

APPENDIX A
ARCHITECTURAL AND ENGINEERING DESIGN REQUIREMENTS

STRU ROOM CODE LOAD	ROOM NAME	ARCHITECTURAL MATRL+FIN FL	WAL	CLG	CLG HT	DOOR SIZE	NOISE RM	NOISE SC	FLR
DR002	DRESSING ROOM W/LOCKER	VT	GPT	AT1	2400	900	25	40	3
		CP	..	.	8-0	3-0	30		60
DUTY1	DUTY ROOM, ONE OCCUPANT	CP	GPT	AT1	2400	900	25	40	3
		.	..	.	8-10	3-0	30		60
DUTY2	DUTY ROOM, TWO OCCUPANTS	CP	GPT	AT1	2400	900	25	40	3
		.	..	.	8-10	5-0	30		60
EVAC1	EVACUATION STAGING BED	VT	GPT	AT1	2600	1200	35	40	3
		.	..	.	8-6	4-0	40		60
EVPR1	EVOKED POTENTIAL RESPONSE ROOM	VT	GPT	AT1	2400	900	30	35	5
		.	..	.	8-0	3-0	35		100
EXEN1	EXAMINATION ROOM, ENT	VT	GPT	AT1	2400	900	30	40	3
		.	..	.	8-0	3-0	35		60
EXOA1	EXAM/OFFICE, AUDIOLOGIST	VT	GAF	AT1	2400	900	25	50	3
		CP	..	.	8-0	3-0	30		60
EXOS1	EXAM/OFFICE, SPEECH THERAPIST	VT	GAF	AT1	2400	900	25	50	3
		CP	..	.	8-0	3-0	30		60
EXPO1	EXAMINATION ROOM, PODIATRY	SV	GPT	AT1	2400	900	30	40	3
		VT	..	.	8-0	3-0	35		60
EXPS1	EXAM/OFFICE, SPEECH THER	VT	GPT	AT1	2400	900	30	40	3
		CP	..	.	8-0	3-0	35		60
EXRG1	EXAMINATION ROOM, GENERAL USE	VT	GPT	AT1	2400	900	30	40	3
		.	..	.	8-0	3-0	35		60
EXRP1	EXAMINATION ROOM, PEDIATRICS	VT	GPT	AT1	2400	900	30	40	3
		.	..	.	8-0	3-0	35		60
EXUD1	EXAM, URODYNAMICS	VT	GLG	AT2	2400	900	30	40	3
		SV	..	.	8-0	3-0	35		60
EXVE1	EXAM, VESTIBULAR (EAR EXAM ROOM)	CP	GAF	AT1	2400	900	25	50	3
		.	..	.	8-0	3-0	30		60
EYCL1	EYE CONTACT LENS FITTING/DISPENSING	VT	GPT	AT1	2400	900	30	40	3
		.	..	.	8-0	3-0	35		60
EYEL1	EYE EXAM/EYE LANE	VT	GPT	AT1	2400	900	30	40	3
		.	..	.	8-0	3-0	35		60

APPENDIX A
ARCHITECTURAL AND ENGINEERING DESIGN REQUIREMENTS

	ELECTRICAL					MEDICAL GASES											HVAC								
						M	D				D	D	L												
ROOM	LIGHT		EM PWR			C	C	L	P	M	H	L	D	O	N	N				TEMP		R	FL		E
CODE	LEV	N	PWR	LT	N	A	A	A	A	V	V	V	E	X	O	I	N	BL	AC	OA	SM	WN	H	IN	FN	X	N
DR002	200	.	.	LE	.	.	.	.	.	.	.	.	.	.	.	.	.	0	4	2	26	20	.	.	.	.	.
	.	.			.												.				78	68					.
DUTY1	300	.	.	.	.	.	.	.	.	.	.	.	.	.	.	.	.	0	6	2	26	20	.	.	.	.	.
	.	.			.												.				78	68					.
DUTY2	300	.	.	.	.	.	.	.	.	.	.	.	.	.	.	.	.	0	6	2	26	20	.	.	.	.	.
	.	.			.												.				78	68					.
EVAC1	500	C	.	LS	.	1	.	.	.	1	.	.	.	1	.	.	A	0	4	2	26	20	.	80	.	.	.
	.	.			.												.				78	68					.
EVPR1	300	A	.	.	.	1	.	.	.	1	.	.	.	.	.	.	.	0	4	2	26	20	.	.	.	.	.
	.	C			.												.				78	68					.
EXEN1	500	C	.	.	.	.	.	.	.	1	.	.	.	1	.	.	.	0	4	2	26	20	.	.	.	.	.
	.	.			.												.				78	68					.
EXOA1	500	C	.	.	.	.	.	.	.	.	.	.	.	.	.	.	.	0	4	2	26	20	.	.	.	.	.
	.	.			.												.				78	68					.
EXOS1	500	C	.	.	.	.	.	.	.	.	.	.	.	.	.	.	.	0	4	2	26	20	.	.	.	.	.
	.	.			.												.				78	68					.
EXPO1	500	C	.	.	.	1	.	.	1	1	.	.	.	1	.	1	B	0	4	2	26	20	.	.	.	.	.
	.	.			.												.				78	68					.
EXPS1	500	C	.	.	.	.	.	.	.	.	.	.	.	.	.	.	.	0	4	2	26	20	.	.	.	.	.
	.	.			.												.				78	68					.
EXRG1	500	C	.	.	.	.	.	.	.	.	.	.	.	.	.	.	.	0	4	2	26	20	.	.	.	.	.
	.	.			.												.				78	68					.
EXRP1	500	C	.	.	.	.	.	.	.	.	.	.	.	.	.	.	.	0	4	2	26	20	.	.	.	.	.
	.	.			.												.				78	68					.
EXUD1	500	C	.	.	.	.	.	.	.	.	.	.	.	.	.	.	.	0	4	2	26	20	.	.	.	.	.
	.	.			.												.				78	68					.
EXVE1	500	C	.	.	.	.	.	.	.	.	.	.	.	.	.	.	.	0	4	2	26	20	.	.	.	.	.
	.	.			.												.				78	68					.
EYCL1	500	C	.	.	.	.	.	.	.	.	.	.	.	.	.	.	.	0	4	2	26	20	.	.	.	.	.
	.	.			.												.				78	68					.
EYEL1	200	A	.	.	.	.	.	.	.	.	.	.	.	.	.	.	.	0	4	2	26	20	.	.	.	.	.
	.	C			.												.				78	68					.

APPENDIX A
ARCHITECTURAL AND ENGINEERING DESIGN REQUIREMENTS

STRU ROOM CODE LOAD	ROOM NAME	ARCHITECTURAL MATRL+FIN FL	WAL	CLG	CLG HT	DOOR SIZE	NOISE RM	SC	FLR
EYEL2	EXAM/OFFICE - EYE LANE	VT	GPT	AT1	2400	900	30	40	3
		.	..	.	8-0	3-0	35		60
EYER1	EYE ELECTRORETINOGRAPHY ROOM	VT	GPT	AT1	2400	900	30	40	3
		.	..	.	8-0	3-0	35		60
EYFC1	EYE FUNDUS CAMERA ROOM	VT	GPT	AT1	2400	900	30	40	3
		.	..	.	8-0	3-0	35		60
EYFD1	EYE FITTING AND DISPENSING	VT	GPT	AT1	2400	900	30	40	3
		.	..	.	8-0	3-0	35		60
EYOT1	EYE OPHTHALMIC TONOGRAPHY ROOM	VT	GPT	AT1	2400	900	30	40	3
		.	..	.	8-0	3-0	35		60
EYPL1	EYE PROSTHETICS LAB/EYE BANK	VT	GPT	AT1	2400	900	30	40	3
		.	..	.	8-0	3-0	35		60
EYVF1	EYE VISUAL FIELD/PERIMETRY ROOM	VT	GPT	AT1	2400	900	30	40	3
		.	..	.	8-0	3-0	35		60
EYVF2	EYE VISUAL FIELD/PERIMETRY - AUTO	VT	BPT	AT1	2400	900	30	40	3
		.	..	.	8-0	3-0	35		60
EYVT1	EYE VISUAL TRAINING AREA	VT	GPT	AT1	2400	900	30	40	3
		.	..	.	8-0	3-0	35		60
FILE1	FILE ROOM, GENERAL USE	VT	GPT	AT1	2400	900	35	40	7.5
		.	..	.	8-0	3-0	40		150
FSBR1	FOOD SERVICE, BAKE AND ROAST CENTER	QT	GLG	GLG	2700	900	35	50	B
		.	..	.	9-0	3-0	40		B
FSCD1	FOOD SERVICE, CAFETERIA DINING ROOM	CP	GVF	AT1	2700	B	35	50	5
		VT	GPT	.	9-0	.	40		100
FSCS1	FD SVC, CART STORAGE	QT	GLG	GLG	2700	900	.	40	5
		.	..	.	9-0	3-0	.		100
FSCS1	FOOD SERVICE, CART STORAGE	QT	GLG	GLG	2700	900	35	50	5
		.	..	.	9-0	3-0	40		100
FSCS2	FOOD SERVICE, CART STORAGE	QT	GLG	GLG	2700	900	35	50	5
		.	..	.	9-0	3-0	40		100
FSDA1	FOOD SERVICE, DESSERT ASSEMBLY	QT	GLG	GLG	2700	900	35	50	5
		.	..	.	9-0	3-0	40		100

APPENDIX A
ARCHITECTURAL AND ENGINEERING DESIGN REQUIREMENTS

	ELECTRICAL					MEDICAL GASES											HVAC								
						M	D				D	D	L												
ROOM CODE	LIGHT LEV	N	EM PWR	LT	N	C A	C A	L A	P A	M V	H V	L V	D E	O X	N O	N I	N	BL	AC	OA	TEMP SM	WN	R H	FL IN	FN	E X	N
EYEL2	200	C	.	.	.	.	.	.	.	.	.	.	.	.	.	.	.	0	4	2	26	20	.	.	.	.	.
	500	F			.												.				78	68					.
EYER1	200	A	.	.	.	.	.	.	.	.	.	.	.	.	.	.	.	0	4	2	26	20	.	.	.	.	.
	.	C			.												.				78	68					.
EYFC1	200	A	.	.	.	1	.	.	.	1	.	.	.	1	.	.	.	0	4	2	26	20	.	.	.	.	.
	.	C			.												.				78	68					.
EYFD1	500	C	.	.	.	.	.	.	.	.	.	.	.	.	.	.	.	0	4	2	26	20	.	.	.	.	.
	.	.			.												.				78	68					.
EYOT1	500	C	.	.	.	.	.	.	.	.	.	.	.	.	.	.	.	0	4	2	26	20	.	.	.	.	.
	.	.			.												.				78	68					.
EYPL1	500	.	.	.	.	.	.	.	.	.	.	.	.	.	.	.	.	0	4	2	26	20	.	.	.	.	.
	1100	.			.												.				78	68					.
EYVF1	200	A	.	.	.	.	.	.	.	.	.	.	.	.	.	.	.	0	4	2	26	20	.	.	.	.	.
	.	C			.												.				78	68					.
EYVF2	200	A	.	.	.	.	.	.	.	.	.	.	.	.	.	.	.	0	4	2	26	20	.	.	.	.	.
	.	C			.												.				78	68					.
EYVT1	200	C	.	.	.	.	.	.	.	.	.	.	.	.	.	.	.	0	4	2	26	20	.	.	.	.	.
	500	.			.												.				78	68					.
FILE1	150	.	.	.	.	.	.	.	.	.	.	.	.	.	.	.	.	0	4	2	26	20	.	.	.	.	.
	.	.			.												.				78	68					.
FSBR1	700	.	.	.	U	.	.	.	.	.	.	.	.	.	.	.	.	0	10	2	26	20	.	.	.	Y	L
	.	.			.												.				78	68					.
FSCD1	200	C	.	LE	U	.	.	.	.	.	.	.	.	.	.	.	.	0	12	2	26	20	.	.	.	.	.
	.	.			.												.				78	68					.
FSCS1	50	.	.	.	U	.	.	.	.	.	.	.	.	.	.	.	.	0	4	2	26	20	.	.	.	.	.
	.	.			.												.				78	68					.
FSCS1	50	.	.	.	U	.	.	.	.	.	.	.	.	.	.	.	.	0	4	2	26	20	.	.	.	.	.
	.	.			.												.				78	68					.
FSCS2	50	.	.	.	U	.	.	.	.	.	.	.	.	.	.	.	.	0	4	2	26	20	.	.	.	.	.
	.	.			.												.				78	68					.
FSDA1	700	.	.	.	U	.	.	.	.	.	.	.	.	.	.	.	.	0	10	2	26	20	.	80	.	.	.
	.	.			.												.				78	68					.

APPENDIX A
ARCHITECTURAL AND ENGINEERING DESIGN REQUIREMENTS

STRU ROOM CODE LOAD	ROOM NAME	ARCHITECTURAL MATRL+FIN FL	WAL	CLG	CLG HT	DOOR SIZE	NOISE RM	SC	FLR
FSDS1	FOOD SERVICE, DISH STORAGE AREA	QT	GLG	GLG	2700	900	.	40	10
		.	..	.	9-0	3-0	.		200
FSDW1	FOOD SERVICE, DISH WASHING	QT	GLG	GLG	2700	900	35	50	B
		.	..	.	9-0	3-0	40		B
FSDW2	FOOD SERVICE DISH WASH SMALL FACILI	QT	GLG	GLG	2700	900	35	50	B
		.	..	.	9-0	3-0	40		B
FSDW3	FOOD SERVICE DISH WASH DETERGNT DSP	QT	GLG	GLG	2700	900	35	50	B
		.	..	.	9-0	3-0	40		B
FSFC1	FOOD SERVICE, FRY CENTER	QT	GLG	GLG	2700	900	35	50	B
		.	..	.	9-0	3-0	40		B
FSFV1	FOOD SERVICE, FRESH FRUIT/VEGETABLE	QT	GLG	GLG	2700	900	35	50	5
		.	..	.	9-0	3-0	40		100
FSGB1	FOOD SERVICE, GRILL AND BROIL AREA	QT	GLG	GLG	2700	900	35	50	B
		.	..	.	9-0	3-0	40		B
FSIR1	FOOD SERVICE, INGREDIENT ROOM	QT	GLG	GLG	2700	900	.	40	7.5
		.	..	.	9-0	3-0	.		150
FSMC1	FOOD SERVICE, MIXING CENTER	QT	GLG	GLG	2700	900	35	50	B
		.	..	.	9-0	3-0	40		B
FSMP1	FOOD SERVICE, MEAT PROCESSING	QT	GLG	GLG	2700	900	35	50	B
		.	..	.	9-0	3-0	40		B
FSNP1	FOOD SERVICE, NOURISHMENT PREP AREA	QT	GLG	GLG	2700	900	35	50	B
		.	..	.	9-0	3-0	40		B
FSPP1	FOOD SERVICE, PASTRY PREPARATION	QT	GLG	GLG	2700	900	35	50	7.5
		.	..	.	9-0	3-0	40		150
FSPT1	FOOD SERVICE, PATIENT TRAY LINE	QT	GLG	GLG	2700	900	35	50	5
		.	..	.	9-0	3-0	40		100
FSPT2	FOOD SERVICE, PATIENT TRAY CAROUSEL	QT	GLG	GLG	2700	900	35	50	5
		.	..	.	9-0	3-0	40		100
FSPW1	FOOD SERVICE, POT WASHING	QT	GLG	GLG	2700	900	35	50	B
		.	..	.	9-0	3-0	40		B
FSSA1	FOOD SERVICE, SALAD ASSEMBLY	QT	GLG	GLG	2700	900	35	50	5
		.	..	.	9-0	3-0	40		100

APPENDIX A
ARCHITECTURAL AND ENGINEERING DESIGN REQUIREMENTS

	ELECTRICAL					MEDICAL GASES											HVAC								
						M	D				D	D	L												
ROOM	LIGHT		EM PWR			C	C	L	P	M	H	L	D	O	N	N				TEMP		R	FL		E	
CODE	LEV	N	PWR	LT	N	A	A	A	A	V	V	V	E	X	O	I	N	BL	AC	OA	SM	WN	H	IN	FN	X	N
FSDS1	50	.	.	.	U	.	.	.	.	.	.	.	.	.	.	.	.	0	4	2	26	20	.	.	.	.	.
	.	.			.												.				78	68					.
FSDW1	500	.	.	.	U	.	.	.	.	.	.	.	.	.	.	.	.	-	10	2	26	20	.	.	.	Y	L
	.	.			.												.				78	68					.
FSDW2	500	.	.	.	U	.	.	.	.	.	.	.	.	.	.	.	.	-	10	2	26	20	.	.	.	Y	L
	.	.			.												.				78	68					.
FSDW3	500	.	.	.	U	.	.	.	.	.	.	.	.	.	.	.	.	-	10	2	26	20	.	.	.	Y	L
	.	.			.												.				78	68					.
FSFC1	700	.	.	.	U	.	.	.	.	.	.	.	.	.	.	.	.	-	10	2	26	20	.	80	.	Y	L
	.	.			.												.				78	68					.
FSFV1	700	.	.	.	U	.	.	.	.	.	.	.	.	.	.	.	.	0	10	2	26	20	.	80	.	.	.
	.	.			.												.				78	68					.
FSGB1	700	.	.	.	U	.	.	.	.	.	.	.	.	.	.	.	.	-	10	2	26	20	.	.	.	Y	L
	.	.			.												.				78	68					.
FSIR1	150	.	.	.	U	.	.	.	.	.	.	.	.	.	.	.	.	0	10	2	26	20	.	80	.	.	.
	.	.			.												.				78	68					.
FSMC1	700	.	.	.	U	.	.	.	.	.	.	.	.	.	.	.	.	0	10	2	26	20	.	80	.	.	.
	.	.			.												.				78	68					.
FSMP1	700	.	.	.	U	.	.	.	.	.	.	.	.	.	.	.	.	0	10	2	26	20	.	80	.	.	.
	.	.			.												.				78	68					.
FSNP1	500	.	.	.	U	.	.	.	.	.	.	.	.	.	.	.	.	0	10	2	26	20	.	80	.	.	.
	.	.			.												.				78	68					.
FSPP1	700	.	.	.	U	.	.	.	.	.	.	.	.	.	.	.	.	0	10	2	26	20	.	80	.	.	.
	.	.			.												.				78	68					.
FSPT1	700	.	.	.	U	.	.	.	.	.	.	.	.	.	.	.	.	0	4	2	26	20	.	80	.	.	.
	.	.			.												.				78	68					.
FSPT2	150	.	.	.	U	.	.	.	.	.	.	.	.	.	.	.	.	-	10	2	26	20	.	.	.	Y	.
	.	.			.												.				78	68					.
FSPW1	300	.	.	.	U	.	.	.	.	.	.	.	.	.	.	.	.	-	10	2	26	20	.	.	.	Y	L
	.	.			.												.				78	68					.
FSSA1	700	.	.	.	U	.	.	.	.	.	.	.	.	.	.	.	.	0	10	2	26	20	.	80	.	.	.
	.	.			.												.				78	68					.

APPENDIX A
ARCHITECTURAL AND ENGINEERING DESIGN REQUIREMENTS

STRU ROOM CODE LOAD	ROOM NAME	ARCHITECTURAL MATRL+FIN FL	WAL	CLG	CLG HT	DOOR SIZE	NOISE RM	SC	FLR
FSSC1	FOOD SERVICE, STEAM CENTER	QT	GLG	GLG	2700	900	35	50	7.5
		.	..	.	9-0	3-0	40		150
FSSL1	FOOD SERVICE, CAFETERIA SERVING	QT	GLG	GLG	2700	900	35	50	7.5
		.	..	.	9-0	3-0	40		150
FSTD1	FOOD SERVICE, THERAPEUTIC DIET PREP	QT	GLG	GLG	2700	900	35	50	7.5
		.	..	.	9-0	3-0	40		150
FSWS1	FOOD SERVICE, WEIGHT SCREENING/WAIT	VT	GPT	AT1	2400	900	30	40	5
		.	..	.	8-0	3-0	35		100
HAFR1	HEARING AID FITTING ROOM	CP	GAF	AT1	2700	900	20	40	3
		.	..	.	9-0	3-0	25		60
HATL1	HEARING AID TESTING LAB/SHOP	VT	GPT	AT1	2700	900	30	40	3
		.	..	.	9-0	3-0	35		60
ICE01	ICE MACHINE ADD-IN	SV	GLG	AT1	2400	OPEN	35	40	B
		VT	GPT	.	8-0	OPEN	40		B
JANC1	JANITORS' CLOSET	SV	GLG	GLG	2400	900	40	40	5
		VT	..	.	8-0	3-0	45		100
LBAP1	LAB ALLERGEN PREPARATION	SV	GLG	AT2	2400	900	30	40	5
		.	..	.	8-0	3-0	35		100
LBAR1	LAB AUTOPSY ROOM	ET	GLG	GLG	2700	1200	35	40	3
		CT	..	.	9-0	4-0	40		60
LBAR2	LAB AUTOPSY TEACHING ROOM	ET	GLG	AT2	2700	900	30	40	5
		CT	..	.	9-0	3-0	35		100
LBAR3	LAB AUTOPSY CLEAN UP ROOM	ET	GLG	GLG	2700	900	30	40	5
		CT	..	.	9-0	3-0	35		100
LBBD1	LAB BLOOD DONOR STATION	SV	GLG	AT2	2600	1200	35	40	3
		.	..	.	8-6	4-0	40		60
LBBD2	LAB BLOOD DONOR PHORESIS STATION	SV	GLG	AT2	2700	900	30	40	5
		.	..	.	9-0	3-0	35		100
LBBD3	LAB BONE DISSECTION (ENT)	SV	GLG	AT2	2700	900	30	50	5
		.	..	.	9-0	3-0	35		100
LBBG1	LAB BLOOD GAS CLINIC	SV	GLG	AT2	2700	900	30	40	5
		.	..	.	9-0	3-0	35		100

APPENDIX A
ARCHITECTURAL AND ENGINEERING DESIGN REQUIREMENTS

	ELECTRICAL					MEDICAL GASES											HVAC									
						M	D				D	D	L													
ROOM	LIGHT		EM PWR			C	C	L	P	M	H	L	D	O	N	N				TEMP		R	FL		E	
CODE	LEV	N	PWR	LT	N	A	A	A	A	V	V	V	E	X	O	I	N	BL	AC	OA	SM	WN	H	IN	FN	X	N
FSSC1	500	.	.	.	U	.	.	.	.	.	.	.	.	.	.	.	.	-	10	2	26	20	.	.	.	Y	L
	.	.			.												.				78	68					.
FSSL1	500	.	.	.	U	.	.	.	.	.	.	.	.	.	.	.	.	0	12	2	26	20	.	.	.	Y	.
	.	.			.												.				78	68					.
FSTD1	500	.	.	.	U	.	.	.	.	.	.	.	.	.	.	.	.	0	10	2	26	20	.	.	.	Y	.
	.	.			.												.				78	68					.
FSWS1	300	.	.	.	U	.	.	.	.	.	.	.	.	.	.	.	.	0	10	2	26	20	.	80	.	.	.
	.	.			.												.				78	68					.
HAFR1	500	.	.	.	U	.	.	.	.	.	.	.	.	.	.	.	.	0	4	1	26	20	.	.	.	.	.
	.	.			.												.				78	68					.
HATL1	700	.	.	.	U	.	.	.	.	.	.	.	.	.	.	.	.	0	4	1	26	20	.	.	.	.	.
	.	.			.												.				78	68					.
ICE01	150	.	.	LS	E	.	.	.	.	.	.	.	.	.	.	.	.	0	6	1.5	26	20	.	.	.	Y	.
	.	.			.												.				78	68					.
JANC1	50	.	.	.	.	.	.	.	.	.	.	.	.	.	.	.	.	EX	10	.	.	.	.	.	.	Y	.
	.	.			.												.				.	.					.
LBAP1	500	C	.	.	.	.	.	.	.	.	.	.	.	.	.	.	.	+	6	2	26	20	.	90	95	.	L
	.	.			.												.				78	68					.
LBAR1	700	D	.	.	.	.	.	.	.	2	.	.	.	.	.	.	B	-	12	3	26	20	.	80	.	Y	M
	1600	F			.												.				78	68					.
LBAR2	700	D	.	.	.	.	.	.	.	2	.	.	.	.	.	.	B	-	12	3	26	20	.	80	.	Y	M
	1600	F			.												.				78	68					.
LBAR3	700	.	.	LE	.	.	.	.	.	2	.	.	.	.	.	.	B	-	12	3	26	20	.	80	.	Y	M
	.	.			.												.				78	68					.
LBBD1	500	C	.	LS	.	.	.	.	.	1	.	.	.	1	.	.	B	0	4	2	26	20	.	80	.	.	.
	.	.			.												.				78	68					.
LBBD2	500	C	R	L	.	.	.	.	.	1	.	.	.	.	.	.	B	0	6	2	26	20	.	80	.	Y	.
	.	.			.												.				78	68					.
LBBD3	500	C	.	.	.	.	.	1	.	1	.	.	.	.	.	.	B	0	6	2	26	20	.	80	.	Y	.
	1100	.			.												.				78	68					.
LBBG1	500	C	R	L	.	1	.	.	1	1	.	.	.	.	.	.	B	0	6	2	26	20	.	80	.	Y	.
	1100	.			.												.				78	68					.

APPENDIX A
ARCHITECTURAL AND ENGINEERING DESIGN REQUIREMENTS

STRU ROOM CODE	ROOM NAME	ARCHITECTURAL MATRL+FIN FL	WAL	CLG	CLG HT	DOOR SIZE	NOISE RM	NOISE SC	FLR LOAD
LBBG2	LAB BLOOD GAS & ELECTROLYTES	SV	GLG	AT2	2700	900	30	40	5
		.	..	.	9-0	3-0	35		100
LBBG3	LAB BLOOD GAS MICROVOLUME - INFANT	SV	GLG	AT2	2700	900	30	40	5
		.	..	.	9-0	3-0	35		100
LBBP1	LAB BODY PREP ROOM	QT	GLG	GLG	2700	900	35	40	5
		.	..	.	9-0	3-0	40		100
LBBS1	LAB BLOOD SHIPPING - BASIC	SV	GLG	AT2	2700	900	35	40	5
		.	..	.	9-0	3-0	40		100
LBBS2	LAB BLOOD SHIPPING - FROZEN BLOOD	SV	GLG	AT2	2700	900	30	40	5
		.	..	.	9-0	3-0	35		100
LBBV1	LAB BODY VIEWING ROOM	SV	GLG	AT2	2700	900	30	40	5
		.	..	.	9-0	3-0	35		100
LBC01	LAB COAGULATION	SV	GLG	AT2	2700	900	35	40	5
		.	..	.	9-0	3-0	40		100
LBCP1	LAB CYTOGENETICS PREPARATION	SV	GLG	AT2	2700	900	35	40	5
		.	..	.	9-0	3-0	40		100
LBCR1	LAB CYTOGENETICS READING ROOM	SV	GLG	AT2	2700	900	30	40	5
		.	..	.	9-0	3-0	35		100
LBCS1	LAB CADAVER STORAGE ROOM	SV	GLG	AT2	2700	900	.	40	5
		.	..	.	9-0	3-0	.		100
LBDE1	LAB DERMATOLOGY	SV	GLG	AT2	2700	900	30	40	5
		.	..	.	9-0	3-0	35		100
LBDR1	LAB DECONTAMINATION ROOM	SV	GLG	AT2	2700	900	35	40	5
		VT	..	.	9-0	3-0	40		100
LBDR2	LAB DECONTAMINATION RM - COMM HOSP	SV	GLG	AT2	2700	900	35	40	3
		VT	..	.	9-0	3-0	40		60
LBDR3	LAB DECONTAMINATION RM - MED CENTER	SV	GLG	AT2	2700	900	35	40	3
		.	..	.	9-0	3-0	40		60
LBDS1	LAB BONE DISSECTION (ENT USE)	SV	GLG	AT2	2700	900	35	40	5
		.	..	.	9-0	3-0	40		100
LBEM1	LAB ELECTRON MICRO' TEM SCOPE	SV	GLG	AT2	2700	900	30	40	5
		.	..	.	9-0	3-0	35		100

APPENDIX A
ARCHITECTURAL AND ENGINEERING DESIGN REQUIREMENTS

	ELECTRICAL					MEDICAL GASES											HVAC										
						M	D				D	D	L														
ROOM	LIGHT		EM PWR			C	C	L	P	M	H	L	D	O	N	N				TEMP		R	FL		E	
CODE	LEV	N	PWR	LT	N	A	A	A	A	V	V	V	E	X	O	I	N	BL	AC	OA	SM	WN	H	IN	FN	X	N
LBBG2	500	C	R	L	.	1	.	.	1	1	.	.	.	1	.	.	B	0	6	2	26	20	.	80	.	Y	.
	1100	.			.												.				78	68					.
LBBG3	500	C	R	L	.	1	.	.	1	1	.	.	.	1	.	.	B	0	6	2	26	20	.	80	.	Y	.
	1100	.			.												.				78	68					.
LBBP1	500	C	.	.	.	1	.	.	.	1	.	.	.	.	.	.	B	-	10	2	26	20	.	80	.	Y	.
	1100	.			.												.				78	68					.
LBBS1	500	C	.	LS	E	.	.	1	.	1	.	.	.	.	.	.	B	0	6	2	26	20	.	80	.	Y	.
	.	.			.												.				78	68					.
LBBS2	500	C	.	LS	E	.	.	1	.	1	.	.	.	.	.	.	B	0	6	2	26	20	.	80	.	.	.
	1100	.			.												.				78	68					.
LBBV1	300	.	.	.	.	.	.	.	.	.	.	.	.	.	.	.	.	-	12	3	26	20	.	80	.	Y	.
	.	.			.												.				78	68					.
LBC01	500	C	R	L	.	.	.	1	.	1	.	.	.	.	.	.	B	0	6	2	26	20	.	80	.	.	.
	1100	.			.												.				78	68					.
LBCP1	500	C	R	L	.	.	.	1	.	1	.	.	.	.	.	.	B	0	6	2	26	20	.	80	.	Y	L
	1100	.			.												.				78	68					.
LBCR1	500	A	R	L	.	.	.	.	.	.	.	.	.	.	.	.	.	0	6	2	26	20	.	80	.	Y	L
	.	C			.												.				78	68					.
LBCS1	150	.	.	LS	E	.	.	.	.	.	.	.	.	.	.	.	.	-	10	2	26	20	.	80	.	Y	.
	.	.			.												.				78	68					.
LBDE1	500	C	.	.	.	.	.	.	.	1	.	.	.	1	.	.	B	0	6	2	26	20	.	80	.	.	L
	1100	.			.												.				78	68					.
LBDR1	500	C	R	L	.	.	.	.	1	1	.	.	.	1	.	.	B	-	10	2	26	20	.	80	.	Y	.
	1100	.			.												.				78	68					.
LBDR2	500	C	R	L	.	.	.	.	1	1	.	.	.	1	.	.	B	-	10	2	26	20	.	80	.	Y	.
	1100	.			.												.				78	68					.
LBDR3	500	C	R	L	.	.	.	.	1	1	.	.	.	1	.	.	B	-	10	2	26	20	.	80	.	Y	.
	1100	.			.												.				78	68					.
LBDS1	500	C	.	.	U	.	.	1	.	1	.	.	.	.	.	.	B	-	6	2	26	20	.	80	.	Y	.
	1100	.			.												.				78	68					.
LBEM1	500	A	.	.	.	.	.	.	.	.	.	.	.	.	.	.	.	0	6	2	26	20	.	80	.	.	.
	.	.			.												.				78	68					.

STRU ROOM CODE LOAD	ROOM NAME	ARCHITECTURAL MATRL+FIN FL	WAL	CLG	CLG HT	DOOR SIZE	NOISE RM	NOISE SC	FLR
LBEM2	LAB ELECTRON MICRO' SEM/TEM SCOPE	SV	GLG	AT2	2700	900	30	40	5
		.	..	.	9-0	3-0	35		100
LBEM3	LAB ELECTRON MICRO' SPECIMEN PREP	SV	GLG	AT2	2700	900	30	40	5
		.	..	.	9-0	3-0	35		100
LBEM4	LAB ELECTRON MICRO' SECTIONING RM	SV	GLG	AT2	2700	900	30	40	5
		.	..	.	9-0	3-0	35		100
LBEM5	LAB ELECTRON MICRO' EVAPORATION RM	SV	GLG	AT2	2700	900	30	40	5
		.	..	.	9-0	3-0	35		100
LBEM6	LAB ELECTRON MICRO' POSITIVE PROC.	SV	GLG	AT2	2700	900	30	40	5
		.	..	.	9-0	3-0	35		100
LBEM7	LAB ELECTRON MICRO' NEGATIVE PROC.	SV	GLG	AT2	2700	900	30	40	5
		.	..	.	9-0	3-0	35		100
LBEN1	LAB ENTOMOLOGY	SV	GLG	AT2	2700	900	35	40	5
		.	..	.	9-0	3-0	40		100
LBFC1	LAB FLOW CYTOMETER ROOM	SV	GLG	AT2	2700	900	30	40	5
		.	..	.	9-0	3-0	35		100
LBFM1	LAB FLUORESCENT MICROSCOPY	SV	GLG	AT2	2700	900	30	40	5
		.	..	.	9-0	3-0	35		100
LBFS1	LAB FROZEN SECTION	SV	GLG	AT2	2700	900	30	40	5
		.	..	.	9-0	3-0	35		100
LBGE1	LAB GASTROENTEROLOGY	SV	GLG	AT2	2700	900	30	40	5
		.	..	.	9-0	3-0	35		100
LBGW1	LAB GLASSWARE WASHING ROOM	SV	GLG	GLG	2700	900	35	40	5
		.	..	.	9-0	3-0	40		100
LBIH1	LAB INDUSTRIAL HYGIENE	SV	GLG	AT2	2700	900	35	40	5
		.	..	.	9-0	3-0	40		100
LBIR1	LAB INCUBATION ROOM WALK-IN	SV	GLG	GLG	2700	900	35	40	5
		.	..	.	9-0	3-0	40		100
LBMR1	LAB MORGUE REFRIGERATOR - FREE STND	SV	GLG	GLG	2700	1050	.	40	C
		.	..	.	9-0	3-6	.		C
LBMR2	LAB MORGUE REFRIGERATOR - WALK-IN	SV	GLG	GLG	2700	1050	35	40	C
		.	..	.	9-0	3-6	40		C

APPENDIX A
ARCHITECTURAL AND ENGINEERING DESIGN REQUIREMENTS

	ELECTRICAL					MEDICAL GASES											HVAC									
						M	D				D	D	L													
ROOM	LIGHT		EM PWR			C	C	L	P	M	H	L	D	O	N	N				TEMP		R	FL		E	
CODE	LEV	N	PWR	LT	N	A	A	A	A	V	V	V	E	X	O	I	N	BL	AC	OA	SM	WN	H	IN	FN	X	N
LBEM2	500	A	R	L		.	.	.	.	.	.	.	.	.	.	.	.	0	6	2	26	20	.	80	.	.	.
	.	.			.												.				78	68					.
LBEM3	500	C	R	L		.	.	.	.	.	.	.	.	.	.	.	.	0	6	2	26	20	.	80	.	.	.
	1100	.			.												.				78	68					.
LBEM4	500	C	R	L		.	.	.	.	.	.	.	.	.	.	.	.	0	6	2	26	20	.	80	.	.	.
	1100	.			.												.				78	68					.
LBEM5	500	C	R	L		.	.	.	.	.	.	.	.	.	.	.	.	0	6	2	26	20	.	80	.	.	.
	.	.			.												.				78	68					.
LBEM6	500	C	R	L		.	.	.	.	.	.	.	.	.	.	.	.	0	6	2	26	20	.	80	.	.	.
	.	.			.												.				78	68					.
LBEM7	500	C	R	L		.	.	.	.	.	.	.	.	.	.	.	.	0	6	2	26	20	.	80	.		
	.	.			.												.				78	68					
LBEN1	500	C	R	L		.	.	.	1	.	1	.	.	.	.	.	B	-	6	2	26	20	.	80	.	Y	L
	1100	.			.												.				78	68					.
LBFC1	500	C	R	L		.	.	.	.	.	1	.	.	.	1	.	B	-	6	2	26	20	.	80	.	Y	.
	1100	.			.												.				78	68					.
LBFM1	500	C	R	L		.	.	.	1	.	1	.	.	.	.	.	B	0	6	2	26	20	.	80	.	.	.
	1100	.			.												.				78	68					.
LBFS1	200	C	.	LS	E	.	.	1	.	1	.	.	.	.	.	.	B	-	4	2	26	20	.	90	.	.	.
	.	.			.												.				78	68					.
LBGE1	500	C	R	L		.	1	.	.	.	1	.	.	.	.	.	B	-	6	2	26	20	.	80	.	Y	M
	1100	.			.												.				78	68					.
LBGW1	200	C	.	L		.	.	.	.	.	.	.	.	.	.	.	.	0	10	2.5	26	20	.	80	.	Y	M
	.	.			.												.				78	68					.
LBIH1	500	C	.	.		.	.	.	.	.	1	.	.	.	.	.	B	-	6	2	26	20	.	80	.	Y	M
	1100	.			.												.				78	68					.
LBIR1	500	C	.	LS	E	.	.	.	.	.	1	.	.	.	.	.	B	+	6	2	26	20	.	80	.	Y	L
	1100	.			.												.				78	68					.
LBMR1	150	.	.	LS	E	.	.	.	.	.	1	.	.	.	.	.	B	-	10	2	.	.	.	.	.	Y	.
	.	.			.												.				.	.					.
LBMR2	150	.	.	LS	E	.	.	.	.	.	1	.	.	.	.	.	B	-	10	2	.	.	.	.	.	Y	.
	.	.			.												.				.	.					.

STRU ROOM CODE LOAD	ROOM NAME	ARCHITECTURAL MATRL+FIN FL	WAL	CLG	CLG HT	DOOR SIZE	NOISE RM	NOISE SC	FLR
LBOB1	LAB OB/GYN CLINIC - SPECIMENS	SV	GLG	AT2	2700	900	30	40	5
		.	..	.	9-0	3-0	35		100
LBOH1	LAB ONCOLOGY/HEMATOLOGY	SV	GLG	AT2	2700	900	30	40	5
		.	..	.	9-0	3-0	35		100
LBRB1	LAB RESEARCH BIOCHEMISTRY	SV	GLG	AT2	2700	900	30	40	5
		.	..	.	9-0	3-0	35		100
LBRC1	LAB RESEARCH CLEAN	SV	GLG	AT2	2700	900	30	40	5
		.	..	.	9-0	3-0	35		100
LBRC2	LAB RESEARCH CONTAINMENT ROOM	SV	GLG	AT2	2700	900	30	40	3
		.	..	.	9-0	3-0	35		60
LBRH1	LAB RHEUMATOLOGY	SV	GLG	AT2	2700	900	30	40	5
		.	..	.	9-0	3-0	35		100
LBRH2	LAB RESEARCH HAZ STUDIES	SV	GLG	AT2	2700	900	30	40	5
		.	..	.	9-0	3-0	35		100
LBRI1	LAB RADIOIMMUNOASSAY	SV	GLG	AT2	2700	900	30	40	5
		.	..	.	9-0	3-0	35		100
LBRP1	LAB RADIATION PROTECTION	SV	GLG	AT2	2700	900	30	40	5
		.	..	.	9-0	3-0	35		100
LBRS1	LAB RESEARCH HAZARDOUS STUDIES	SV	GLG	AT2	2700	900	30	40	5
		.	..	.	9-0	3-0	35		100
LBSC1	LAB SMALL CLINIC - STANDARD	SV	GLG	AT2	2400	900	30	40	5
		VT	..	.	8-0	3-0	35		100
LBSM1	LAB SOLUTION & MEDIA PREP	SV	GLG	AT2	2700	900	30	40	5
		.	..	.	9-0	3-0	35		100
LBSP1	LAB SPECIMEN COLLECTION STATION	SV	GLG	AT2	2400	900	30	40	5
		.	..	.	8-0	3-0	35		100
LBSS1	LAB SPECIMEN SHIPPING AREA	SV	GLG	AT2	2400	900	30	40	5
		.	..	.	8-0	3-0	35		100
LBTS1	LAB TISSUE STORAGE AREA	SV	GLG	AT2	2700	900	30	40	5
		.	..	.	9-0	3-0	35		100
LBTS2	LAB TISSUE STORAGE REFRIGERATED	PB	SPF	SPF	2700	900	.	.	C
		.	..	.	9-0	3-0	.		C

APPENDIX A
ARCHITECTURAL AND ENGINEERING DESIGN REQUIREMENTS

	ELECTRICAL					MEDICAL GASES											HVAC										
						M	D				D	D	L							TEMP		R	FL		E	
ROOM CODE	LIGHT LEV	N	EM PWR	LT	N	C A	C A	L A	P A	M V	H V	L V	D E	O X	N O	N I	N	BL	AC	OA	SM	WN	H	IN	FN	X	N
LBOB1	500	C	R	L	.	.	.	.	.	1	.	.	.	.	.	.	B	0	6	2	26	20	.	80	.	Y	L
	1100	.			.												.				78	68					.
LBOH1	500	C	R	L	.	.	.	1	.	1	.	.	.	.	.	.	B	-	6	2	26	20	.	80	.	Y	M
	1100	.			.												.				78	68					.
LBRB1	500	C	.	LS	E	.	.	1	.	1	.	.	.	.	.	.	B	-	6	2	26	20	.	80	.	Y	M
	1100	.			.												.				78	68					.
LBRC1	500	C	.	LS	E	.	.	1	.	1	.	.	.	.	.	.	B	+	6	2	26	20	.	80	.	.	L
	1100	.			.												.				78	68					.
LBRC2	500	C	.	LS	E	.	.	1	.	1	.	.	.	.	.	.	B	-	6	2	26	20	.	80	.	Y	M
	1100	.			.												.				78	68					.
LBRH1	500	C	.	.	.	.	.	1	.	1	.	.	.	.	.	.	B	-	6	2	26	20	.	80	.	.	L
	1100	.			.												.				78	68					.
LBRH2	300	C	.	.	U	.	.	1	.	1	.	.	1	.	.	.	B	-	6	2	26	20	.	80	.	Y	M
	1100	.			.												.				78	68					.
LBRI1	500	C	.	LS	E	.	.	1	.	1	.	.	1	.	.	.	B	+	6	2	26	20	.	80	.	.	.
	1100	.			.												.				78	68					.
LBRP1	500	C	.	.	.	.	.	.	.	.	.	.	.	.	.	.	.	0	6	2	26	20	.	80	.	.	.
	1100	.			.												.				78	68					.
LBRS1	500	C	.	LS	E	.	.	1	.	1	.	.	.	.	.	.	B	-	6	2	26	20	.	80	.	Y	M
	1100	.			.												.				78	68					.
LBSC1	500	C	.	L	.	.	.	.	.	1	.	.	.	1	.	.	B	0	6	2	26	20	.	80	.	Y	M
	1100	.			.												.				78	68					.
LBSM1	500	C	R	L	.	.	.	1	.	1	.	.	.	.	.	.	B	+	6	2	26	20	.	90	95	.	M
	.	.			.												.				78	68					.
LBSP1	300	.	.	LS	.	.	.	.	.	1	.	.	.	.	.	.	B	0	6	2	26	20	.	80	.	.	.
	.	.			.												.				78	68					.
LBSS1	300	.	.	LS	.	.	.	.	.	1	.	.	.	.	.	.	B	0	6	2	26	20	.	80	.	.	.
	.																.				78	68					.
LBTS1	300	.	.	LS	E	.	.	.	.	.	.	.	.	.	.	.	.	+	6	2	26	20	.	80	.	.	.
	.	.			.												.				78	68					.
LBTS2	200	.	.	LS	E	.	.	.	.	.	.	.	.	.	.	.	.	+	6	2	26	20	.	80	.	.	.
	.	.			.												.				78	68					.

APPENDIX A
ARCHITECTURAL AND ENGINEERING DESIGN REQUIREMENTS

STRU ROOM CODE LOAD	ROOM NAME	ARCHITECTURAL MATRL+FIN FL	WAL	CLG	CLG HT	DOOR SIZE	NOISE RM	SC	FLR
LBUL1	LAB ULTRA LOW TEMP FREEZER AREA	PB	SPF	SPF	2700	900	.	.	5
		.	..	.	9-0	3-0	.		100
LBUR1	LAB UROLOGY URINE LAB	SV	GLG	AT2	2700	900	35	40	5
		.	..	.	9-0	3-0	40		100
LBVP1	LAB VENIPUNCTURE STATION 1	SV	GLG	AT2	2700	1200	30	40	5
		.	..	.	9-0	4-0	35		100
LBVP2	LAB VENIPUNCTURE/CONTROL STA CLINI	SV	GLG	AT2	2700	1200	30	40	5
		.	..	.	9-0	4-0	35		100
LBWA1	LAB WATER	SV	GLG	AT2	2700	900	30	40	5
		.	..	.	9-0	3-0	35		100
LCCL1	LINEN CONTROL, CLEAN	VT	GLG	AT2	2700	900	35	40	7.5
		SV	..	.	9-0	3-0	40		150
LCFA1	LINEN CONTROL, FOLDING AREA	VT	GLG	AT2	2700	900	35	40	7.5
		SV	..	.	9-0	3-0	40		150
LCS01	LINEN CONTROL, SEAMSTRESS	VT	GLG	AT2	2700	900	35	40	7.5
		SV	..	.	9-0	3-0	40		150
LCSL1	LINEN CONTROL, SOILED LINEN	VT	GLG	AT2	2700	900	35	40	5
		SV	..	.	9-0	3-0	40		100
LCUC1	LINEN CONTROL, UNIFORM CONVEYOR	VT	GLG	AT2	2700	900	35	40	5
		SV	..	.	9-0	3-0	40		200
LDAT1	LABOR & DELIVERY, ANTEPARTUM TESTIN	VT	GLG	AT2	2700	1200	30	45	3
		SV	..	.	9-0	4-0	35		60
LDBR1	LABOR & DELIVERY, BIRTHING ROOM	SV	GVF	AT2	3000	1200	30	45	3
		.	..	.	10-0	4-0	35		60
LDDR1	LABOR & DELIVERY, DELIVERY ROOM	ET	GCT	GLG	3000	J	30	45	3
		SV	GLG	.	10-0	.	35		60
LDEP1	LABOR & DELIVERY, EXAM AND PREP	VT	GLG	AT2	2400	1200	30	45	3
		SV	..	.	8-0	4-0	35		60
LDLR1	LABOR & DELIVERY, LABOR ROOM	SV	GLG	AT2	2400	1200	30	45	3
		VT	..	.	8-0	4-0	35		60
LDNS1	LABOR & DELIVERY, NURSE STATION	VT	GLG	AT2	2400	OPEN	30	45	5
		SV	..	.	8-0	OPEN	35		100

APPENDIX A
ARCHITECTURAL AND ENGINEERING DESIGN REQUIREMENTS

	ELECTRICAL					MEDICAL GASES											HVAC										
						M	D				D	D	L														
ROOM CODE	LIGHT LEV	N	EM PWR	LT	N	C A	C A	L A	P A	M V	H V	L V	D E	O X	N O	N I	N	BL	AC	OA	TEMP SM	TEMP WN	R H	FL IN	FL FN	E X	N
LBUL1	200	.	.	LS	E	.	.	.	.	.	.	.	.	.	.	.	.	+	6	2	.	.	.	.	.	.	.
	.	.			.												.				.	.					.
LBUR1	500	C	R	L	.	.	.	1	.	1	.	.	.	.	.	.	B	-	6	2	26	20	.	80	.	Y	M
	1100	.			.												.				78	68					.
LBVP1	700	C	R	L	.	.	.	.	.	1	.	.	.	1	.	.	B	0	6	2	26	20	.	80	.	.	.
	1100	.			.												.				78	68					.
LBVP2	700	C	R	L	.	.	.	.	.	1	.	.	.	1	.	.	B	0	6	2	26	20	.	80	.	.	.
	1100	.			.												.				78	68					.
LBWA1	300	.	R	L	.	.	.	1	.	1	.	.	.	.	.	.	B	0	6	2	26	20	.	.	.	.	.
	.	.			.												.				78	68					.
LCCL1	300	.	.	.	.	.	.	.	.	.	.	.	.	.	.	.	.	0	4	2	26	20	.	.	.	.	.
	.	.			.												.				78	70					.
LCFA1	300	.	.	.	.	.	.	.	.	.	.	.	.	.	.	.	.	0	4	2	26	20	.	.	.	.	.
	.	.			.												.				78	70					.
LCS01	1100	.	.	.	.	.	.	.	.	.	.	.	.	.	.	.	.	0	4	2	26	20	.	.	.	.	.
	.	.			.												.				78	70					.
LCSL1	200	.	.	.	.	.	.	.	.	.	.	.	.	.	.	.	.	-	10	2	24	24	.	.	.	Y	.
	.	.			.												.				75	75					.
LCUC1	.	.	.	.	.	.	.	.	.	.	.	.	.	.	.	.	.	0	4	2	26	20	.	.	.	.	.
	.				.												.				78	70					.
LDAT1	500	C	R	L	.	1	.	.	.	3	.	.	.	1	.	.	B	0	6	2	24	24	.	90	.	.	.
	1100	.			.												.				75	75					.
LDBR1	1100	A	R	LB	.	2	.	.	.	2	.	.	.	2	.	.	E	+	6	2	24	24	.	90	.	.	.
	.	D			.												.				75	75					.
LDDR1	2100	D	RA	LB	.	2	.	.	.	3	.	.	.	.	1	.	C	++	25	5	20	24	Y	90	90	Y	C
	.	.			.												D				68	75					P
LDEP1	500	C	R	L	.	1	.	.	.	3	.	.	.	1	.	.	B	0	6	2	24	24	.	90	.	.	.
	1100	.			.												.				75	75					.
LDLR1	300	C	R1	L	.	1	.	.	.	3	.	.	.	1	.	.	B	0	6	2	24	24	.	90	.	.	.
	1100	.			.												.				75	75					.
LDNS1	300	C	R	L	.	.	.	.	.	.	.	.	.	.	.	.	.	0	6	2	24	24	.	90	.	.	.
	700	.			.												.				75	75					.

APPENDIX A
ARCHITECTURAL AND ENGINEERING DESIGN REQUIREMENTS

STRU ROOM CODE LOAD	ROOM NAME	ARCHITECTURAL MATRL+FIN FL	WAL	CLG	CLG HT	DOOR SIZE	NOISE RM	SC	FLR
LDRI1	LABOR & DELIVERY, RESUSCITATION ISL	ET	GLG	GLG	3000	OPEN	30	45	5
		SV	..	.	10-0	OPEN	35		100
LIBB1	LIBRARY, BOOK STACK AREA	CP	GVF	AT1	3000	OPEN	25	45	D
		.	..	.	10-0	OPEN	30		D
LIBC1	LIBRARY, CARD CATALOG	CP	GVF	AT1	3000	900	25	45	7.5
		.	..	.	10-0	3-0	30		150
LIBD1	LIBRARY, CHARGE DESK AREA	CP	GVF	AT1	3000	900	25	45	5
		.	..	.	10-0	3-0	30		100
LIBP1	LIBRARY, PERIODICALS STACKS	CP	GVF	AT1	3000	900	25	45	D
		.	..	.	10-0	3-0	30		D
LIBS1	LIBRARY, SEATING AREA, INFORMAL	CP	GVF	AT1	3000	900	25	45	3
		.	..	.	10-0	3-0	30		60
LIBS2	LIBRARY, SEATING AREA, FORMAL	CP	GVF	AT1	3000	900	25	45	5
		.	..	.	10-0	3-0	30		100
LIBV1	LIBRARY, AUDIOVISUAL ROOM	CP	GAF	AT1	3000	900	25	45	7.5
		.	..	.	10-0	3-0	30		150
LIBV2	LIBRARY, MICROFILM VIEWING ROOM	CP	GPT	AT1	3000	900	25	45	3
		.	..	.	10-0	3-0	30		60
LIBW1	LIBRARY, WORK AREA - LIBRARY STAFF	CP	GPT	AT1	2700	900	25	45	5
		.	..	.	9-0	3-0	30		100
LMAB1	LAB MODULE ANAEROBIC BACT' - TB	SV	GLG	GLG	2700	900	30	40	5
		.	..	.	9-0	3-0	35		100
LMBB1	LAB MODULE BLOOD BANK - BASIC	SV	GLG	AT2	2700	900	30	40	5
		.	..	.	9-0	3-0	35		100
LMBB2	LAB MODULE BLOOD BANK - COMM HOSP	SV	GLG	AT2	2700	900	30	40	C
		.	..	.	9-0	3-0	35		C
LMBB3	LAB MODULE BLOOD BANK - MED CENTER	SV	GLG	AT2	2700	900	30	40	C
		.	..	.	9-0	3-0	35		C
LMCH1	LAB MODULE CHEMISTRY - BASIC	SV	GLG	AT2	2700	900	35	40	C
		.	..	.	9-0	3-0	40		C
LMCH2	LAB MODULE CHEMISTRY - COMM HOSP	SV	GLG	AT2	2700	900	35	40	5
		.	..	.	9-0	3-0	40		100

APPENDIX A
ARCHITECTURAL AND ENGINEERING DESIGN REQUIREMENTS

	ELECTRICAL					MEDICAL GASES											HVAC									
						M	D				D	D	L													
ROOM	LIGHT		EM PWR			C	C	L	P	M	H	L	D	O	N	N				TEMP		R	FL		E	
CODE	LEV	N	PWR	LT	N	A	A	A	A	V	V	V	E	X	O	I	N	BL	AC	OA	SM	WN	H	IN	FN	X	N
LDRI1	500	C	R	L	.	2	.	.	.	3	.	.	.	2	.	.	B	0	6	2	24	24	Y	90	.	.	.
	1100	.			.												C				75	75					.
LIBB1	300	.	.	LE	.	.	.	.	.	.	.	.	.	.	.	.	.	0	4	1	26	20	.	.	.	.	.
	.	.			.												.				78	68					.
LIBC1	500	.	.	.	.	.	.	.	.	.	.	.	.	.	.	.	.	0	4	1	26	20	.	.	.	.	.
	.	.			.												.				78	68					.
LIBD1	500	.	.	.	.	.	.	.	.	.	.	.	.	.	.	.	.	0	4	1	26	20	.	.	.	.	.
	.	.			.												.				78	68					.
LIBP1	500	.	.	.	.	.	.	.	.	.	.	.	.	.	.	.	.	0	4	1	26	20	.	.	.	.	.
	.	.			.												.				78	68					.
LIBS1	500	.	.	LE	.	.	.	.	.	.	.	.	.	.	.	.	.	0	6	1.5	26	20	.	.	.	.	.
	.	.			.												.				78	68					.
LIBS2	500	.	.	LE	.	.	.	.	.	.	.	.	.	.	.	.	.	0	6	1.5	26	20	.	.	.	.	.
	.	.			.												.				78	68					.
LIBV1	500	.	.	.	.	.	.	.	.	.	.	.	.	.	.	.	.	0	4	1	26	20	.	.	.	.	.
	.	.			.												.				78	68					.
LIBV2	200	.	.	.	.	.	.	.	.	.	.	.	.	.	.	.	.	0	4	1	26	20	.	.	.	.	.
	.	.			.												.				78	68					.
LIBW1	700	.	.	.	.	.	.	.	.	.	.	.	.	.	.	.	.	0	4	1	26	20	.	.	.	.	.
	.	.			.												.				78	68					.
LMAB1	500	C	R	L	.	.	.	1	.	1	.	.	.	.	.	.	B	0	6	2	26	20	.	.	.	Y	M
	1100	.			.												.				78	68					.
LMBB1	500	C	.	LS	E	.	.	.	.	.	.	.	.	.	.	.	.	0	6	2	26	20	.	.	.	.	.
	1100	.			.												.				78	68					.
LMBB2	500	C	.	LS	E	.	.	.	.	.	.	.	.	.	.	.	.	0	6	2	26	20	.	.	.	.	.
	1100	.			.												.				78	68					.
LMBB3	500	C	.	LS	E	.	.	.	.	.	.	.	.	.	.	.	.	0	6	2	26	20	.	.	.	.	.
	1100	.			.												.				78	68					.
LMCH1	500	C	R	L	.	.	.	1	.	1	.	.	.	.	.	.	B	-	6	2	26	20	.	.	.	.	.
	1100	.			.												.				78	68					.
LMCH2	500	C	R	L	.	.	.	1	.	1	.	.	.	.	.	.	B	0	6	2	26	20	.	.	.	.	.
	1100	.			.												.				78	68					.

APPENDIX A
ARCHITECTURAL AND ENGINEERING DESIGN REQUIREMENTS

STRU ROOM CODE LOAD	ROOM NAME	ARCHITECTURAL MATRL+FIN FL	WAL	CLG	CLG HT	DOOR SIZE	NOISE RM	NOISE SC	FLR
LMCH3	LAB MODULE CHEMISTRY - MED CENTER	SV	GLG	AT2	2700	900	35	40	5
		.	..	.	9-0	3-0	40		100
LMCY1	LAB MODULE CYTOLOGY - BASIC	SV	GLG	AT2	2700	900	35	40	5
		.	..	.	9-0	3-0	40		100
LMCY2	LAB MODULE CYTOLOGY - COMM HOSP	SV	GLG	AT2	2700	900	35	40	5
		.	..	.	9-0	3-0	40		100
LMCY3	LAB MODULE CYTOLOGY - MED CENTER	SV	GLG	AT2	2700	900	35	40	5
		.	..	.	9-0	3-0	40		100
LMFB1	LAB MODULE FROZEN BLOOD - BASIC	SV	GLG	AT2	2700	900	35	40	5
		.	..	.	9-0	3-0	40		100
LMFB2	LAB MODULE FROZEN BLOOD - COMM HOSP	SV	GLG	AT2	2700	900	35	40	5
		.	..	.	9-0	3-0	40		100
LMFB3	LAB MODULE FROZEN BLOOD - MED CEN	SV	GLG	AT2	2700	900	35	40	5
		.	..	.	9-0	3-0	40		100
LMHC1	LAB MODULE HISTOLOGY/CYTOLOGY BASIC	SV	GLG	AT2	2700	900	35	40	5
		.	..	.	9-0	3-0	40		100
LMHI1	LAB MODULE HEMATOLOGY/IMMUNO/SEROL'	SV	GLG	AT2	2700	900	35	40	5
		.	..	.	9-0	3-0	40		100
LMHS1	LAB MODULE HISTOLOGY - BASIC	SV	GLG	AT2	2700	900	35	40	5
		.	..	.	9-0	3-0	40		100
LMHS2	LAB MODULE HISTOLOGY - COMM HOSP	SV	GLG	AT2	2700	900	35	40	5
		.	..	.	9-0	3-0	40		100
LMHS3	LAB MODULE HISTOLOGY - MED CEN	SV	GLG	AT2	2700	900	35	40	5
		.	..	.	9-0	3-0	40		100
LMM01	LAB MODULE MICROBIOLOGY - BASIC	SV	GLG	GLG	2700	900	35	40	5
		.	..	.	9-0	3-0	40		100
LMM02	LAB MODULE MICROBIOLOGY - COMM HOSP	SV	GLG	GLG	2700	900	35	40	5
		.	..	.	9-0	3-0	40		100
LMM03	LAB MODULE MICROBIOLOGY - MED CEN	SV	GLG	GLG	2700	900	35	40	5
		.	..	.	9-0	3-0	40		100
LMMP1	LAB MODULE MICROBIOLOGY/PARASITOLOG	SV	GLG	GLG	2700	900	35	40	5
		.	..	.	9-0	3-0	40		100

APPENDIX A
ARCHITECTURAL AND ENGINEERING DESIGN REQUIREMENTS

	ELECTRICAL					MEDICAL GASES											HVAC									
						M	D				D	D	L													
ROOM	LIGHT		EM PWR			C	C	L	P	M	H	L	D	O	N	N				TEMP		R	FL		E	
CODE	LEV	N	PWR	LT	N	A	A	A	A	V	V	V	E	X	O	I	N	BL	AC	OA	SM	WN	H	IN	FN	X	N
LMCH3	500	C	R	L		.	.	.	1	.	1	.	.	.	.	.	B	-	6	2	26	20	.	.	.	Y	.
	1100	.			.												.				78	68					.
LMCY1	500	C	R	L		.	.	.	1	.	1	.	.	.	.	.	B	-	6	2	26	20	.	.	.	Y	.
	1100	.			.												.				78	68					.
LMCY2	500	C	R	L		.	.	.	1	.	1	.	.	.	.	.	B	-	6	2	26	20	.	.	.	Y	M
	1100	.			.												.				78	68					.
LMCY3	500	C	R	L		.	.	.	1	.	1	.	.	.	.	.	B	-	6	2	78	68	.	.	.	Y	M
	1100	.			.												.				26	20					.
LMFB1	500	C	R	L		E	.	.	1	.	1	.	.	.	.	.	B	0	6	2	78	68	.	.	.	.	.
	1100	.			.												.				26	20					.
LMFB2	500	C	R	L		E	.	.	1	.	1	.	.	.	.	.	B	0	6	2	78	68	.	.	.	.	.
	1100	.			.												.				26	20					.
LMFB3	500	C	R	L		E	.	.	1	.	1	.	.	.	.	.	B	0	6	2	78	68	.	.	.	.	.
	1100	.			.												.				26	20					.
LMHC1	500	C	R	L		E	.	.	1	.	1	.	.	.	.	.	B	-	6	2	78	68	.	.	.	Y	M
	1100	.			.												.				26	20					.
LMHI1	500	C	R	L		E	.	.	1	.	1	.	.	.	.	.	B	-	6	2	78	68	.	.	.	Y	M
	1100	.			.												.				26	20					.
LMHS1	500	C	R	L		E	.	.	1	.	1	.	.	.	.	.	B	-	6	2	78	68	.	.	.	Y	M
	1100	.			.												.				26	20					.
LMHS2	500	C	R	L		.	.	.	1	.	1	.	.	.	.	.	B	-	6	2	26	20	.	.	.	Y	M
	1100	.			.												.				78	68					.
LMHS3	500	C	R	L		.	.	.	1	.	1	.	.	.	.	.	B	-	6	2	26	20	.	.	.	Y	M
	1100	.			.												.				78	68					.
LMM01	500	C	R	L		.	.	.	1	.	1	.	.	.	.	.	B	-	6	2	26	20	.	.	.	Y	M
	1100	.			.												.				78	68					.
LMM02	500	C	R	L		.	.	.	1	.	1	.	.	.	.	.	B	-	6	2	26	20	.	.	.	Y	M
	1100	.			.												.				78	68					.
LMM03	500	C	R	L		.	.	.	1	.	1	.	.	.	.	.	B	-	6	2	26	20	.	.	.	Y	M
	1100	.			.												.				78	68					.
LMMP1	500	C	R	L		.	.	.	1	.	1	.	.	.	.	.	B	-	6	2	26	20	.	.	.	Y	M
	1100	.			.												.				78	68					.

APPENDIX A
ARCHITECTURAL AND ENGINEERING DESIGN REQUIREMENTS

STRU ROOM CODE LOAD	ROOM NAME	ARCHITECTURAL MATRL+FIN FL	WAL	CLG	CLG HT	DOOR SIZE	NOISE RM	SC	FLR
LMMY1	LAB MODULE MYCOLOGY	SV	GLG	AT2	2700	900	35	40	5
		.	..	.	9-0	3-0	40		100
LMP01	LAB MODULE PARASITOLOGY - BASIC	SV	GLG	GLG	2700	900	35	40	5
		.	..	.	9-0	3-0	40		100
LMP02	LAB MODULE PARASITOLOGY - COMM HOSP	SV	GLG	GLG	2700	900	35	40	5
		.	..	.	9-0	3-0	40		100
LMP03	LAB MODULE PARASITOLOGY - MED CEN	SV	GLG	GLG	2700	900	35	40	5
		.	..	.	9-0	3-0	40		100
LMS01	LAB MODULE SEROLOGY - BASIC	SV	GLG	AT2	2700	900	35	40	5
		.	..	.	9-0	3-0	40		100
LMS02	LAB MODULE SEROLOGY - COMM HOSP	SV	GLG	AT2	2700	900	35	40	5
		.	..	.	9-0	3-0	40		100
LMS03	LAB MODULE SEROLOGY - MED CENTER	SV	GLG	AT2	2700	900	35	40	5
		.	..	.	9-0	3-0	40		100
LMSL1	LAB MODULE STAT LAB - BASIC	SV	GLG	AT2	2700	900	35	40	5
		.	..	.	9-0	3-0	40		100
LMSL2	LAB MODULE STAT LAB - COMM HOSP	SV	GLG	AT2	2700	900	35	40	5
		.	..	.	9-0	3-0	40		100
LMSL3	LAB MODULE STAT LAB - MED CENTER	SV	GLG	AT2	2700	900	35	40	5
		.	..	.	9-0	3-0	40		100
LMT01	LAB MODULE TOXICOLOGY - BASIC	SV	GLG	GLG	2700	900	35	40	5
		.	..	.	9-0	3-0	40		100
LMT02	LAB MODULE TOXICOLOGY - COMM HOSP	SV	GLG	GLG	2700	900	35	40	5
		.	..	.	9-0	3-0	40		100
LMT03	LAB MODULE TOXICOLOGY - MED CENTER	SV	GLG	GLG	2700	900	35	40	5
		.	..	.	9-0	3-0	40		100
LMT04	LAB MODULE TOXICOLOGY - DRUG SCREEN	SV	GLG	GLG	2700	900	35	40	5
		.	..	.	9-0	3-0	40		100
LMU01	LAB MODULE URINALYSIS - BASIC	SV	GLG	ALG	2700	900	35	40	5
		.	..	.	9-0	3-0	40		100
LMU02	LAB MODULE URINALYSIS - COMM HOSP	SV	GLG	AT2	2700	900	35	40	5
		.	..	.	9-0	3-0	40		100

APPENDIX A
ARCHITECTURAL AND ENGINEERING DESIGN REQUIREMENTS

	ELECTRICAL					MEDICAL GASES											HVAC										
						M	D				D	D	L														
ROOM	LIGHT		EM PWR			C	C	L	P	M	H	L	D	O	N	N				TEMP		R	FL		E	
CODE	LEV	N	PWR	LT	N	A	A	A	A	V	V	V	E	X	O	I	N	BL	AC	OA	SM	WN	H	IN	FN	X	N
LMMY1	500	C	R	L		.	.	.	1	.	1	.	.	.	.	.	B	-	6	2	26	20	.	.	.	Y	M
	1100	.			.												.				78	68					.
LMP01	500	C	R	L		.	.	.	1	.	1	.	.	.	.	.	B	-	6	2	26	20	.	.	.	Y	M
	1100	.			.												.				78	68					.
LMP02	500	C	R	L		.	.	.	1	.	1	.	.	.	.	.	B	-	6	2	26	20	.	.	.	Y	M
	1100	.			.												.				78	68					.
LMP03	500	C	R	L		.	.	.	1	.	1	.	.	.	.	.	B	-	6	2	26	20	.	.	.	Y	M
	1100	.			.												.				78	68					.
LMS01	500	C	R	L		.	.	.	1	.	1	.	.	.	.	.	B	-	6	2	26	20	.	.	.	Y	M
	1100	.			.												.				78	68					.
LMS02	500	C	R	L		.	.	.	1	.	1	.	.	.	.	.	B	-	6	2	26	20	.	.	.	Y	M
	1100	.			.												.				78	68					.
LMS03	500	C	R	L		.	.	.	1	.	1	.	.	.	.	.	B	-	6	2	26	20	.	.	.	Y	M
	1100	.			.												.				78	68					.
LMSL1	500	C	R	L		.	.	.	1	.	1	.	.	.	.	.	B	-	4	2	26	20	.	.	.	.	.
	1100	.			.												.				78	68					.
LMSL2	500	C	R	L		.	.	.	1	.	1	.	.	.	.	.	B	0	4	2	26	20	.	.	.	.	.
	1100	.			.												.				78	68					.
LMSL3	500	C	R	L		.	.	.	1	.	1	.	.	.	.	.	B	0	4	2	26	20	.	.	.	.	.
	1100	.			.												.				78	68					.
LMT01	500	C	R	L		.	.	.	1	.	1	.	.	.	.	.	B	-	6	2	26	20	.	.	.	Y	M
	1100	.			.												.				78	68					.
LMT02	500	C	R	L		.	.	.	1	.	1	.	.	.	.	.	B	-	6	2	26	20	.	.	.	Y	M
	1100	.			.												.				78	68					.
LMT03	500	C	R	L		.	.	.	1	.	1	.	.	.	.	.	B	-	6	2	26	20	.	.	.	Y	M
	1100	.			.												.				78	68					.
LMT04	500	C	R	L		.	.	.	1	.	1	.	.	.	.	.	B	-	6	2	26	20	.	.	.	Y	L
	1100	.			.												.				78	68					.
LMU01	500	C	R	L		.	.	.	1	.	1	.	.	.	.	.	B	-	6	2	26	20	.	.	.	Y	L
	1100	.			.												.				78	68					.
LMU02	500	C	R	L		.	.	.	1	.	1	.	.	.	.	.	B	-	6	2	26	21	.	.	.	Y	M
	1100	.			.												.				78	70					.

APPENDIX A
ARCHITECTURAL AND ENGINEERING DESIGN REQUIREMENTS

STRU ROOM CODE LOAD	ROOM NAME	ARCHITECTURAL MATRL+FIN FL	WAL	CLG	CLG HT	DOOR SIZE	NOISE RM	NOISE SC	FLR
LMU03	LAB MODULE URINALYSIS - MED CENTER	SV	GLG	AT2	2700	900	35	40	5
		.	..	.	9-0	3-0	40		100
LMV01	LAB MODULE VIROLOGY - BASIC	SV	GLG	AT2	2700	900	35	40	5
		.	..	.	9-0	3-0	40		100
LMV02	LAB MODULE VIROLOGY - COMM HOSP	SV	GLG	AT2	2700	900	35	40	5
		.	..	.	9-0	3-0	40		100
LMV03	LAB MODULE VIROLOGY - MED CENTER	SV	GLG	AT2	2700	900	35	40	5
		.	..	.	9-0	3-0	40		100
LMVC1	LAB MODULE VIROLOGY CONTAM CONTROL	SV	GLG	AT2	2700	900	35	40	5
		.	..	.	9-0	3-0	40		100
LMVS1	LAB MODULE VIROLOGY STERILIZATION	SV	GLG	AT2	2700	900	35	40	5
		.	..	.	9-0	3-0	40		100
LOB01	LOBBY, HOSPITAL OR CLINIC	CP	GVF	AT2	VAR	SP	35	40	5
		SP	SSP	SSP	VAR	SP	40		100
LR001	LOCKER ROOM, 6.5 NSF/LOCKER	SV	GLG	AT2	2400	900	30	40	5
		VT	..	.	8-0	3-0	35		100
LR002	LOCKER ROOM, 10 NSF/LOCKER	SV	GLG	AT2	2400	900	30	40	5
		.	..	.	8-0	3-0	35		100
MEDP1	MEDICATION PREPARATION STATION	VT	GLG	AT2	2400	900	30	45	5
		.	..	.	8-0	3-0	35		100
MICL1	MEDICAL ILLUS, COPY LABORATORY	SV	GPT	AT1	2400	900	30	40	5
		VT	..	.	8-0	3-0	35		100
MIDR1	MEDICAL ILLUS, DARKROOM, DUAL	SV	GLG	AT1	2400	L	30	40	5
		VT	..	.	8-0		35		100
MIDR2	MEDICAL ILLUS, DARKROOM B&W	SV	GLG	AT1	2400	SP	30	40	5
		VT	..	.	8-0		35		100
MIDR3	MEDICAL ILLUS, DARKROOM, COLOR	SV	GLG	AT1	2400	SP	30	40	5
		VT	..	.	8-0		35		100
MIDR4	MEDICAL ILLUS, DARKROOM COPY CAMRA	SV	GLG	AT1	2400	SP	30	40	5
		VT	..	.	8-0		35		100
MIPF1	MEDICAL ILLUS, PHOTO FINISH	SV	GLG	AT1	2400	900	30	40	5
		VT	..	.	8-0	3-0	35		100

APPENDIX A
ARCHITECTURAL AND ENGINEERING DESIGN REQUIREMENTS

	ELECTRICAL					MEDICAL GASES											HVAC									
						M	D				D	D	L													
ROOM	LIGHT		EM PWR			C	C	L	P	M	H	L	D	O	N	N				TEMP		R	FL		E	
CODE	LEV	N	PWR	LT	N	A	A	A	A	V	V	V	E	X	O	I	N	BL	AC	OA	SM	WN	H	IN	FN	X	N
LMU03	500	C	R	L		.	.	.	1	.	1	.	.	.	.	.	B	-	6	2	26	21	.	.	.	Y	M
	1100	.			.												.				78	70					.
LMV01	500	C	R	L		.	.	.	1	.	1	.	.	.	.	.	B	-	6	2	26	21	.	.	.	Y	M
	1100	.			.												.				78	79					.
LMV02	500	C	R	L		.	.	.	1	.	1	.	.	.	.	.	B	-	6	2	26	21	.	.	.	Y	M
	1100	.			.												.				78	70					.
LMV03	500	C	R	L		.	.	.	1	.	1	.	.	.	.	.	B	-	6	2	26	21	.	.	.	Y	M
	1100	.			.												.				78	70					.
LMVC1	500	C	R	L		.	.	.	1	.	1	.	.	.	.	.	B	-	6	2	26	21	.	.	.	Y	M
	1100	.			.												.				78	70					.
LMVS1	500	C	R	L		.	.	.	1	.	1	.	.	.	.	.	B	-	6	2	26	21	.	.	.	Y	M
	1100	.			.												.				78	70					.
LOB01	150	.	.	LE		.	.	.	.	.	.	.	.	.	.	.	.	0	6	2	26	20	.	.	.	.	.
	.	.			.												.				78	68					.
LR001	200	.	.	LE		.	.	.	.	.	.	.	.	.	.	.	.	-	10	2	26	20	.	.	.	.	.
	.				.												.				78	68					.
LR002	200	.	.	LE		.	.	.	.	.	.	.	.	.	.	.	.	-	10	2	26	20	.	.	.	.	.
	.	.			.												.				78	68					.
MEDP1	1100	C	R	L		.	.	.	.	.	.	.	.	.	.	.	.	0	4	1	26	21	.	80	.	.	.
	.	.			.												.				78	70					.
MICL1	500	C	.	.		.	.	.	.	.	.	.	.	.	.	.	.	0	4	1	26	20	.	.	.	.	.
	1100	.			.												.				78	68					.
MIDR1	150	G	.	.		.	.	.	.	.	.	.	.	.	.	.	.	-	10	2	24	20	.	.	.	Y	.
	.	.			.												.				75	68					.
MIDR2	150	G	.	.		.	.	.	.	.	.	.	.	.	.	.	.	-	10	2	24	20	.	.	.	Y	.
	.	.			.												.				75	68					.
MIDR3	150	G	.	.		.	.	.	.	.	.	.	.	.	.	.	.	-	10	2	24	20	.	.	.	Y	.
	.	.			.												.				75	68					.
MIDR4	150	G	.	.		.	.	.	.	.	.	.	.	.	.	.	.	-	10	2	24	20	.	.	.	Y	.
	.	.			.												.				75	68					.
MIPF1	500	C	.	.		.	.	.	.	.	.	.	.	.	.	.	.	0	4	1	26	20	.	.	.	.	.
	1100	.			.												.				78	68					.

APPENDIX A
ARCHITECTURAL AND ENGINEERING DESIGN REQUIREMENTS

STRU ROOM CODE LOAD	ROOM NAME	ARCHITECTURAL MATRL+FIN FL	WAL	CLG	CLG HT	DOOR SIZE	NOISE RM	NOISE SC	FLR
MIPP1	MEDICAL ILLUS, PRINT PROCESS DUAL	SV	GLG	AT1	2400	900	30	40	5
		VT	..	.	8-0	3-0	35		100
MIPP2	MEDICAL ILLUS, PRINT PROCESS B&W	SV	GLG	AT1	2400	900	30	40	5
		VT	..	.	8-0	3-0	35		100
MIPP3	MEDICAL ILLUS, PRINT PROCESS COLOR	SV	GLG	AT1	2400	900	30	40	5
		VT	..	.	8-0	3-0	35		100
MIPP4	MEDICAL ILLUS, COLOR SLIDE PROCESS	SV	GLG	AT1	2400	900	30	40	5
		VT	..	.	8-0	3-0	35		100
MIST1	MEDICAL ILLUS, STUDIO	VT	GLG	AT1	2400	900	30	40	5
		.	..	.	8-0	3-0	35		100
MIST2	MEDICAL ILLUS, STUDIO - ANATOMY	VT	GLG	AT1	2400	900	30	40	5
		.	..	.	8-0	3-0	35		100
MIST3	MEDICAL ILLUS, PHOTO LAB AREA	SV	GLG	AT1	2400	900	30	40	5
		.	..	.	8-0	3-0	35		100
MMCR1	MEDICAL MATERIAL CART RECEIVING	VT	GPT	AT1	3000	E	35	50	5
		.	..	.	10-0		40		100
MMCR2	MEDICAL MATERIAL CART RESTOCKING AR	VT	GPT	AT1	3000	E	35	50	5
		.	..	.	10-0		40		100
MMES1	MEDICAL MATERIAL EQUIPMENT STORAGE	VT	GPT	AT1	3000	E	35	50	6
		.	..	.	10-0		40		125
MMGS1	MEDICAL MATERIAL GENERAL STORAGE	VT	GPT	AT1	B	1200	35	50	6
		.	..	.		4-0	40		125
MMRP1	MEDICAL MATERIAL RECEIVING/PROCESS	VT	GPT	AT1	B	1200	35	50	5
		.	..	.		4-0	40		100
MRMB1	MAIL ROOM, MAILBOX AREA	VT	GPT	AT1	2700	900	35	50	5
		.	..	.	9-0	3-0	40		100
MRPS1	MAIL ROOM, U.S. POST OFFICE	VT	GPT	AT1	2700	900	35	50	5
		.	..	.	9-0	3-0	40		100
MRRS1	MAIL ROOM, RECEIVING/SORTING	VT	GPT	AT1	2700	B	35	50	6
		.	..	.	9-0		40		125
MRS01	MED RECORDS STOR, FIXED	VT	GPT	AT1	2700	900	35	40	7.5
		.	..	.	9-0	3-0	40		150

APPENDIX A
ARCHITECTURAL AND ENGINEERING DESIGN REQUIREMENTS

	ELECTRICAL					MEDICAL GASES											HVAC								
						M	D				D	D	L												
ROOM	LIGHT		EM PWR			C	C	L	P	M	H	L	D	O	N	N				TEMP		R	FL		E
CODE	LEV	N	PWR	LT	N	A	A	A	A	V	V	V	E	X	O	I	N	BL	AC	OA	SM	WN	H	IN	FN	X	N
MIPP1	500	C	.	.	.	.	.	.	.	.	.	.	.	.	.	.	.	0	6	1.5	26	20	.	.	.	.	.
	.	.			.												.				78	68					.
MIPP2	500	C	.	.	.	.	.	.	.	.	.	.	.	.	.	.	.	0	6	1.5	26	20	.	.	.	.	.
	.	.			.												.				78	68					.
MIPP3	500	C	.	.	.	.	.	.	.	.	.	.	.	.	.	.	.	0	6	1.5	26	20	.	.	.	.	.
	.	.			.												.				78	68					.
MIPP4	500	C	.	.	.	.	.	.	.	.	.	.	.	.	.	.	.	0	6	1.5	26	20	.	.	.	.	.
	.	.			.												.				78	68					.
MIST1	500	C	.	.	.	.	.	.	.	.	.	.	.	.	.	.	.	0	4	1	26	20	.	.	.	.	.
	1600	.			.												.				78	68					.
MIST2	500	C	.	.	.	.	.	.	.	.	.	.	.	.	.	.	.	0	4	1	26	20	.	.	.	.	.
	1600	.			.												.				78	68					.
MIST3	500	C	.	.	.	.	.	.	.	.	.	.	.	.	.	.	.	0	4	1	26	20	.	.	.	.	.
	1100	.			.												.				78	68					.
MMCR1	50	.	.	.	.	.	.	.	.	.	.	.	.	.	.	.	.	0	4	1	26	20	.	.	.	.	.
	.	.			.												.				78	68					.
MMCR2	50	.	.	.	.	.	.	.	.	.	.	.	.	.	.	.	.	0	4	1	26	20	.	.	.	.	.
	.	.			.												.				78	68					.
MMES1	100	.	.	.	.	.	.	.	.	.	.	.	.	.	.	.	.	0	4	1	24	20	.	.	.	.	.
	.	.			.												.				75	68					.
MMGS1	100	.	.	.	.	.	.	.	.	.	.	.	.	.	.	.	.	0	4	1	26	20	.	.	.	.	.
	.	.			.												.				78	68					.
MMRP1	200	.	.	.	.	.	.	.	.	.	.	.	.	.	.	.	.	0	4	1	24	10	.	.	.	.	.
	.	.			.												.				75	55					.
MRMB1	500	.	.	.	.	.	.	.	.	.	.	.	.	.	.	.	.	0	4	1	26	20	.	.	.	.	.
	.	.			.												.				78	68					.
MRPS1	500	.	.	LE	.	.	.	.	.	.	.	.	.	.	.	.	.	0	4	1	26	20	.	.	.	.	.
	.	.			.												.				78	68					.
MRRS1	500	.	.	.	.	.	.	.	.	.	.	.	.	.	.	.	.	0	4	1	26	20	.	.	.	.	.
	1100	.			.												.				78	68					.
MRS01	300	.	.	.	.	.	.	.	.	.	.	.	.	.	.	.	.	0	4	1	26	20	.	.	.	.	.
	.	.			.												.				78	68					.

APPENDIX A
ARCHITECTURAL AND ENGINEERING DESIGN REQUIREMENTS

STRU ROOM CODE LOAD	ROOM NAME	ARCHITECTURAL MATRL+FIN FL	WAL	CLG	CLG HT	DOOR SIZE	NOISE RM	NOISE SC	FLR
MRS02	MED RECORDS STOR, MOVABLE	VT	GPT	AT1	2700	900	35	40	D
		CP	..	.	9-0	3-0	40		D
MRT01	MED RECORDS TRANSCRIPTION	CP	GPT	AT1	2400	900	25	40	3
		.	..	.	8-0	3-0	30		60
MRWK1	MED RECORDS WORKROOM	VT	GPT	AT1	2400	900	30	40	5
		CP	..	.	8-0	3-0	35		100
NBCD1	NUCLEAR/BIOLOGICAL/CHEM DECON CENTR	CS	SSP	SSP		SP	35	50	5
		.	..	.		SP	40		100
NCWD1	NOURISHMENT CENTER, WARD	VT	GLG	AT1	2400	OPEN	35	40	5
		SV	GPT	.	8-0	OPEN	40		100
NCWD2	NOURISHMENT CENTER, MULTI-WARD	VT	GLG	AT1	2400	OPEN	35	40	5
		SV	GPT	.	8-0		40		100
NMCR1	NUCLEAR MEDICINE, COMPUTER ROOM	CP	GLG	AT1	2400	900	30	40	5
		VT	..	.	8-0	3-0	35		100
NMDC1	NUCLEAR MEDICINE, DOSE CALIBRATION	SV	GLG	AT1	2400	900	30	40	3
		.	..	.	8-0	3-0	35		60
NMDS1	NUCLEAR MEDICINE, DECAY STORAGE	SV	GLG	AT1	2400	900	30	40	3
		.	..	.	8-0	3-0	35		60
NMGS1	NUCLEAR MEDICINE, GENERAL SCANNING	SV	GLG	AT1	3000	1200	30	40	5
		.	..	.	10-0	4-0	35		100
NMIR1	NUCLEAR MEDICINE, INJECTION ROOM	SV	GLG	AT1	2400	1050	30	40	3
		.	..	.	8-0	3-6	35		60
NMRC1	NUCLEAR MEDICINE, RAD. CART HOLD	SV	GLG	AT1	2400	900	30	40	5
		.	..	.	8-0	3-0	35		100
NMRP1	NUCLEAR MEDICINE, RADIOPHARMACY	SV	GLG	AT1	2400	900	30	40	5
		.	..	.	8-0	3-0	35		100
NMSS1	NUCLEAR MEDICINE, SPECIAL SCANNING	SV	GLG	AT1	2400	900	30	40	5
		.	..	.	8-0	3-0	35		100
NMUR1	NUCLEAR MEDICINE, UPTAKE ROOM	SV	GLG	AT1	2400	900	30	40	5
		.	..	.	8-0	3-0	35		100
NMWB1	NUCLEAR MEDICINE WHOLE BODY COUNT L	SV	GLG	AT1	3000	1200	30	40	5
		.	..	.	10-0	4-0	35		100

APPENDIX A
ARCHITECTURAL AND ENGINEERING DESIGN REQUIREMENTS

	ELECTRICAL					MEDICAL GASES											HVAC								
						M	D				D	D	L												
ROOM	LIGHT		EM PWR			C	C	L	P	M	H	L	D	O	N	N				TEMP		R	FL		E	
CODE	LEV	N	PWR	LT	N	A	A	A	A	V	V	V	E	X	O	I	N	BL	AC	OA	SM	WN	H	IN	FN	X	N
MRS02	300	.	.	.	.	.	.	.	.	.	.	.	.	.	.	.	.	0	4	1	26	20	.	.	.	.	.
	.	.			.												.				78	68					.
MRT01	700	.	.	.	.	.	.	.	.	.	.	.	.	.	.	.	.	.0	4	1	26	20	.	.	.	.	.
	.	.			.												.				78	68					.
MRWK1	700	.	.	.	.	.	.	.	.	.	.	.	.	.	.	.	.	0	4	1	26	20	.	.	.	.	.
	.	.			.												.				78	68					.
NBCD1	500	C	R	L	.	1	.	.	1	1	.	.	.	1	.	.	B	-	6	2	26	20	.	90	.	Y	L
	.	.			.												.				78	68					.
NCWD1	500	.	.	.	U	.	.	.	.	.	.	.	.	.	.	.	.	0	6	2	26	20	.	80	.	.	.
	.	.			.												.				78	68					.
NCWD2	500	.	.	.	U	.	.	.	.	.	.	.	.	.	.	.	.	0	6	2	26	20	.	80	.	Y	.
	.	.			.												.				78	68					.
NMCR1	500	.	.	LS	.	.	.	.	.	.	.	.	.	.	.	.	.	0	6	2	26	20	.	.	.	.	.
	.	.			.												.				78	68					.
NMDC1	500	C	.	LS	.	1	.	.	.	1	.	.	.	1	.	.	.	-	6	2	26	20	.	90	.	Y	L
	1100	.			.												.				78	68					.
NMDS1	300	.	.	LS	E	.	.	.	.	.	.	.	.	.	.	.	.	-	6	2	26	20	.	90	.	Y	.
	.	.			.												.				78	68					.
NMGS1	500	A	.	LS	.	1	.	.	.	1	.	.	.	1	.	.	.	-	6	2	26	20	.	.	.	Y	.
	.	C			.												.				78	68					.
NMIR1	700	A	.	LS	.	1	.	.	.	1	.	.	.	1	.	.	.	+	6	2	26	20	.	.	.	Y	.
	.	C			.												.				78	68					.
NMRC1	300	.	.	LS	E	.	.	.	.	.	.	.	.	.	.	.	.	0	4	1	26	20	.	.	.	.	.
	.	.			.												.				78	68					.
NMRP1	500	A	.	LS	.	1	.	.	.	1	.	.	.	.	.	.	.	-	6	2	26	20	.	.	.	Y	L
	.	C			.												.				78	68					.
NMSS1	500	C	.	LS	E	1	.	.	.	1	.	.	.	1	.	.	.	0	6	2	26	20	.	.	.	.	.
	.	.			.												.				78	68					.
NMUR1	200	.	.	LS	E	1	.	.	.	1	.	.	.	1	.	.	.	0	6	2	26	20	.	.	.	.	.
	.	.			.												.				78	68					.
NMWB1	500	C	.	LS	E	1	.	.	.	1	.	.	.	1	.	.	.	0	6	2	26	20	.	.	.	.	.
	.	.			.												.				78	68					.

STRU ROOM CODE LOAD	ROOM NAME	ARCHITECTURAL MATRL+FIN FL	WAL	CLG	CLG HT	DOOR SIZE	NOISE RM	SC	FLR
NMWB2	NUCLEAR MEDICINE WHOLE BODY COUNT H	SV	GLG	AT1	3000	1200	30	45	5
		.	..	.	10-0	4-0	35		100
NPBF1	NEURO/PSYCH BIOFEEDBACK TX ROOM	CP	GPT	AT1	2400	900	30	40	3
		.	GVT	.	8-0	3-0	35		60
NPGT1	NEURO/PSYCH GROUP THERAPY RM	CP	GPT	AT1	2700	900	30	40	3
		.	GVP	.	9-0	3-0	35		60
NPPT1	NEURO/PSYCH TESTING ROOM	CP	GPT	AT1	2400	900	30	40	3
		.	GVP	.	8-0	3-0	35		60
NPPT2	NEURO/PSYCH PEDIATRIC TESTING	CP	GPT	AT1	2400	900	30	40	3
		.	GVP	.	8-0	3-0	35		60
NSTA1	NURSE STATION, INPATIENT WARD	CP	GVF	AT1	2400	M	35	40	5
		VT	..	.	8-0		40		100
NSTA2	NURSE STATION, PHYSIO MONITORING	CP	GVF	AT1	2400	M	35	40	5
		VT	..	.	8-0		40		100
NSTA3	NURSE STATION, SUBSTATION	CP	GVF	AT1	2400	M	35	40	5
		VT	..	.	8-0		40		100
NSTA4	NURSE STATION, OUTPATIENT CLINICS	CP	GVF	AT1	2400	M	35	40	5
		VT	GPT	.	8-0		40		100
NSTA5	NURSE STATION, EMERGENCY ROOM	SV	GVF	AT1	2400	M	35	40	5
		VT	GPT	.	8-0		40		100
NSTA6	NURSE STATION, STEP-DOWN UNITS	CP	GVF	AT1	2400	M	35	40	5
		VT	GPT	.	8-0		40		100
NYA01	NURSERY ADMISSION/OBSERVATION	SV	GLG	AT2	2700	1200	25	45	3
		VT	GPT	.	9-0	4-0	30		60
NYAR1	NURSERY ANTEROOM WITH SCRUB SINK	SV	GLG	AT2	2700	1200	25	45	3
		VT	GPT	.	9-0	4-0	30		60
NYCC1	NURSERY CONTINUING CARE	SV	GLG	AT2	2700	1200	25	45	3
		VT	GPT	.	9-0	4-0	30		60
NYFA1	NURSERY FEEDING AREA	SV	GLG	AT2	2700	1200	25	45	3
		VT	GPT	.	9-0	4-0	30		60
NYIC1	NURSERY INTERMEDIATE CARE	SV	GLG	AT2	2700	F	25	45	3
		VT	GPT	.	9-0		30		60

APPENDIX A
ARCHITECTURAL AND ENGINEERING DESIGN REQUIREMENTS

	ELECTRICAL					MEDICAL GASES											HVAC									
						M	D				D	D	L													
ROOM	LIGHT		EM PWR			C	C	L	P	M	H	L	D	O	N	N				TEMP		R	FL		E	
CODE	LEV	N	PWR	LT	N	A	A	A	A	V	V	V	E	X	O	I	N	BL	AC	OA	SM	WN	H	IN	FN	X	N
NMWB2	500	A	.	LS	.	1	.	.	.	1	.	.	.	1	.	.	.	0	6	2	26	20	.	.	.	.	.
	.	C			.												.				78	68					.
NPBF1	700	A	.	.	.	.	.	.	.	.	.	.	.	.	.	.	.	0	4	2	26	20	.	.	.	.	.
	.	C			.												.				78	68					.
NPGT1	500	C	.	LE	.	.	.	.	.	.	.	.	.	.	.	.	.	0	6	2	26	20	.	.	.	.	.
	.	.			.												.				78	68					.
NPPT1	500	C	.	.	.	.	.	.	.	.	.	.	.	.	.	.	.	0	4	2	26	20	.	.	.	.	.
	.	.			.												.				78	68					.
NPPT2	500	C	.	.	.	.	.	.	.	.	.	.	.	.	.	.	.	0	4	2	26	20	.	.	.	.	.
	.	.			.												.				78	68					.
NSTA1	300	C	R	L	.	.	.	.	.	.	.	.	.	.	.	.	.	0	6	2	26	20	.	80	.	.	.
	700	.			.												.				78	68					.
NSTA2	300	C	R	L	.	.	.	.	.	.	.	.	.	.	.	.	.	0	6	2	26	20	.	80	.	.	.
	.	.			.												.				78	68					.
NSTA3	300	C	R	L	.	.	.	.	.	.	.	.	.	.	.	.	.	0	6	2	26	20	.	80	.	.	.
	700	.			.												.				78	68					.
NSTA4	300	C	.	LE	.	.	.	.	.	.	.	.	.	.	.	.	.	0	4	2	26	20	.	.	.	.	.
	700	.			.												.				78	68					.
NSTA5	500	C	RA	L	.	.	.	.	.	.	.	.	.	.	.	.	.	0	4	2	26	20	.	.	.	.	.
	1100	.			.												.				78	68					.
NSTA6	300	C	R	L	.	.	.	.	.	.	.	.	.	.	.	.	.	0	6	2	26	20	.	80	.	.	.
	700	.			.												.				78	68					.
NYA01	700	A	R	L	.	1	.	.	.	1	.	.	.	1	.	.	G	++	12	3	23	27	.	90	.	.	P
	.	C			.												.				74	80					.
NYAR1	300	.	.	.	.	.	.	.	.	.	.	.	.	.	.	.	.	+	12	3	23	27	Y	90	.	.	P
	.	.			.												.				74	80					.
NYCC1	700	A	R	L	.	1	.	.	.	1	.	.	.	1	.	.	H	+	12	5	23	27	Y	90	.	.	P
	.	C			.												.				74	80					.
NYFA1	500	A	.	LS	.	1	.	.	.	1	.	.	.	1	.	.	.	0	6	1.5	23	27	Y	90	.	.	P
	.	C			.												.				74	80					.
NYIC1	700	A	R	L	.	2	.	.	.	2	.	.	.	2	.	.	G	++	12	5	23	27	Y	90	.	.	P
	.	C			.												.				74	80					.

APPENDIX A
ARCHITECTURAL AND ENGINEERING DESIGN REQUIREMENTS

STRU ROOM CODE LOAD	ROOM NAME	ARCHITECTURAL MATRL+FIN FL	WAL	CLG	CLG HT	DOOR SIZE	NOISE RM	NOISE SC	FLR
NYIC2	NURSERY INTENSIVE CARE	SV	GLG	AT2	2700	1200	25	45	3
		VT	..	.	9-0	4-0	30		60
NYIR1	NURSERY ISOLATION ROOM	SV	GLG	AT2	2700	1200	25	45	3
		VT	..	.	9-0	4-0	30		60
NYNN1	NURSERY NORMAL NEWBORN	SV	GLG	AT2	2700	1200	25	45	3
		VT	..	.	9-0	4-0	30		60
NYNS1	NURSERY NURSING STATION	VT	GLG	AT2	2700	900	25	45	5
		CP	..	.	9-0	3-0	30		100
NYPR1	NURSERY PROCEDURE ROOM	SV	GLG	AT2	2700	1200	25	45	3
		.	..	.	9-0	4-0	30		60
NYPT1	NURSERY TEACHING PARENTS ROOM	CP	GVF	AT1	2400	900	30	45	3
		.	..	.	8-0	3-0	35		60
NYRR1	NURSERY RESPIRATORY RESUSCITATION	SV	GLG	AT2	2700	N	30	45	3
		VT	GPT	.	9-0		35		60
NYTU1	NURSERY TRANSPORT UNIT ALCOVE	SV	GLG	AT2	2400	OPEN	30	45	3
		VT	GPT	.	8-0	OPEN	35		60
NYWE1	NURSERY WORK & EXAM AREA	SV	GLG	AT1	2700	1200	30	45	3
		VT	GPT	.	9-0	4-0	35		60
OBSR1	OBSERVATION ROOM ONE-WAY MIRROR	CP	GPT	AT1	2400	900	20	30	3
		.	..	.	8-0	3-0	25		60
OFA01	OFFICE, ADMINISTRATIVE, STD FURN.	CP	GPT	AT1	2400	900	30	40	3
		.	..	.	8-0	3-0	35		60
OFA02	OFFICE, ADMINISTRATIVE, SYS FURN.	CP	GPT	AT1	2400	900	30	40	3
		.	..	.	8-0	3-0	35		60
OFC01	OFFICE, COMMANDER, SMALL FACILITY	CP	GVF	AT1	2400	900	30	40	3
		.	..	.	8-0	3-0	35		60
OFC02	OFFICE, COMMANDER, MEDIUM FACILITY	CP	GVF	AT1	2400	900	30	40	3
		.	..	.	8-0	3-0	35		60
OFC03	OFFICE, COMMANDER, LARGE FACILITY	CP	GVF	AT1	2600	900	30	45	3
		.	..	.	8-6	3-0	35		60
OFD01	OFFICE, MEDICAL PROVIDER	VT	GPT	AT1	2400	900	30	40	3
		.	..	.	8-0	3-0	35		60

APPENDIX A
ARCHITECTURAL AND ENGINEERING DESIGN REQUIREMENTS

	ELECTRICAL					MEDICAL GASES											HVAC										
						M	D				D	D	L														
ROOM	LIGHT		EM PWR			C	C	L	P	M	H	L	D	O	N	N				TEMP		R	FL		E	
CODE	LEV	N	PWR	LT	N	A	A	A	A	V	V	V	E	X	O	I	N	BL	AC	OA	SM	WN	H	IN	FN	X	N
NYIC2	700	A	RC	L	.	3	.	.	.	3	.	.	.	3	.	.	G	++	12	5	23	27	Y	90	.	.	P
	.	C			.												.				74	80					.
NYIR1	700	A	R	L	.	3	.	.	.	3	.	.	.	3	.	.	.	+-	6	2	23	27	Y	90	.	.	P
	.	C			.												.				74	80					.
NYNN1	700	A	R	L	.	1	.	.	.	1	.	.	.	1	.	.	H	++	12	5	23	27	Y	90	.	.	P
	.	C			.												.				74	80					.
NYNS1	300	C	R	L	.	.	.	.	.	.	.	.	.	.	.	.	0		6	2	26	21	.	90	.	.	.
	700	.			.												.				78	70					.
NYPR1	500	C	R	L	.	2	.	.	.	2	.	.	.	2	.	.	G	++	12	5	23	27	Y	90	95	.	P
	1100	.			.												.				74	80					.
NYPT1	700	A	.	.	.	.	.	.	.	.	.	.	.	.	.	.	.	+	6	2	23	27	Y	.	.	.	P
	.	C			.												.				74	80					.
NYRR1	500	C	R	L	.	2	.	.	.	2	.	.	.	2	.	.	G	++	12	5	23	27	Y	90	.	.	P
	1100	.			.												.				74	80					.
NYTU1	500	C	R	L	.	.	.	.	.	.	.	.	.	.	.	.	0		4	1	26	20	.	90	.	.	.
	.	.			.												.				78	68					.
NYWE1	500	C	R	L	.	1	.	.	.	1	.	.	.	1	.	.	G	++	12	5	23	27	Y	90	.	.	P
	1100	.			.												.				74	80					.
OBSR1	300	A	.	.	.	.	.	.	.	.	.	.	.	.	.	.	0		4	1	26	20	.	.	.	.	.
	.	.			.												.				78	68					.
OFA01	300	.	.	.	.	.	.	.	.	.	.	.	.	.	.	.	0		4	1	26	20	.	.	.	.	.
	500	.			.												.				78	68					.
OFA02	300	.	.	.	.	.	.	.	.	.	.	.	.	.	.	.	0		4	1	26	20	.	.	.	.	.
	500	.			.												.				78	68					.
OFC01	300	.	.	.	.	.	.	.	.	.	.	.	.	.	.	.	0		4	1	26	20	.	.	.	.	.
	500	.			.												.				78	68					.
OFC02	300	.	.	.	.	.	.	.	.	.	.	.	.	.	.	.	0		4	1	26	20	.	.	.	.	.
	500	.			.												.				78	68					.
OFC03	300	.	.	.	.	.	.	.	.	.	.	.	.	.	.	.	0		4	1	26	20	.	.	.	.	.
	500	.			.												.				78	68					.
OFD01	300	.	.	.	.	.	.	.	.	.	.	.	.	.	.	.	0		4	1	26	20	.	.	.	.	.
	500	.			.												.				78	68					.

APPENDIX A
ARCHITECTURAL AND ENGINEERING DESIGN REQUIREMENTS

STRU ROOM CODE LOAD	ROOM NAME	ARCHITECTURAL MATRL+FIN FL	WAL	CLG	CLG HT	DOOR SIZE	NOISE RM	NOISE SC	FLR
OFD02	OFFICE, MEDICAL PROVIDER RESIDENTS	CP	GPT	AT1	2400	900	30	40	3
		.	..	.	8-0	3-0	35		60
OFD03	OFFICE, ANATOMIC PATHOLOGIST	SV	GLG	AT2	2400	900	30	40	3
		.	..	.	8-0	3-0	35		60
OFDR1	OFFICE, DOCTOR, RADIOLOGY	CP	GLG	AT1	2400	900	30	40	3
		.	..	.	8-0	3-0	35		60
OFDR2	OFFICE, RESIDENT, RADIOLOGY	CP	GVF	AT1	2400	900	30	40	3
		.	..	.	8-0	3-0	35		60
OFE01	OFFICE, XO/CHIEF PROF SVCS, SMALL	CP	GVF	AT1	2400	900	30	40	3
		.	..	.	8-0	3-0	35		60
OFE02	OFFICE, XO/CHIEF PROF SVCS, LARGE	CP	GVF	AT1	2400	900	30	40	3
		.	..	.	8-0	3-0	35		60
OFER2	OFFICE, EXECUTIVE RADIOLOGY LARGE	CP	GPT	AT1	2400	900	30	40	3
		.	..	.	8-0	3-0	35		60
OFM01	OFFICE, MID-MANAGEMENT, SMALL	CP	GPT	AT1	2400	900	30	40	3
		.	..	.	8-0	3-0	35		60
OFM02	OFFICE, MID-MANAGEMENT, LARGE	CP	GPT	AT1	2400	900	30	40	3
		.	..	.	8-0	3-0	35		60
OFMR1	OFFICE, MID-MANAGEMENT RADIOLOGY SM	CP	GPT	AT1	2400	900	30	40	3
		.	..	.	8-0	3-0	35		60
OFMR2	OFFICE, EXECUTIVE, RADIOLOGY	CP	GPT	AT1	2400	900	35	40	3
		.	..	.	8-0	3-0	40		60
OFNP1	OFFICE, NEURO-PSYCH	CP	GPT	AT1	2400	900	35	40	3
		.	..	.	8-0	3-0	40		60
OFWP1	OFFICE, NEURO-PSYCH, CONSULTATION	CP	GPT	AT1	2400	900	30	40	3
		.	..	.	8-0	3-0	35		60
OPAI1	OUTPATIENT ALLERGY INJECTION ROOM	SV	GLG	AT1	2400	900	30	40	3
		VT	GPT	.	8-0	3-0	35		60
OPAS1	OUTPATIENT ALLERGY SKIN TESTING	SV	GLG	AT1	2400	900	30	40	3
		VT	GPT	.	8-0	3-0	35		60
OPCR1	OUTPATIENT CAST ROOM PER STATION	SV	GLG	AT2	2700	G	35	50	3
		.	..	.	9-0		40		60

APPENDIX A
ARCHITECTURAL AND ENGINEERING DESIGN REQUIREMENTS

	ELECTRICAL					MEDICAL GASES											HVAC								
						M	D				D	D	L												
ROOM	LIGHT		EM PWR			C	C	L	P	M	H	L	D	O	N	N				TEMP		R	FL		E	
CODE	LEV	N	PWR	LT	N	A	A	A	A	V	V	V	E	X	O	I	N	BL	AC	OA	SM	WN	H	IN	FN	X	N
OFD02	300	.	.	.	.	.	.	.	.	.	.	.	.	.	.	.	.	0	4	1	26	20	.	.	.	.	.
	500	.			.												.				78	68					.
OFD03	300	.	.	.	.	.	.	.	.	.	.	.	.	.	.	.	.	0	4	1	26	20	.	.	.	.	.
	500	.			.												.				78	68					.
OFDR1	300	.	.	.	.	.	.	.	.	.	.	.	.	.	.	.	.	0	4	1	26	20	.	.	.	.	.
	500	.			.												.				78	68					.
OFDR2	300	.	.	.	.	.	.	.	.	.	.	.	.	.	.	.	.	0	4	1	26	20	.	.	.	.	.
	500	.			.												.				78	68					.
OFE01	300	.	.	.	.	.	.	.	.	.	.	.	.	.	.	.	.	0	4	1	26	20	.	.	.	.	.
	500	.			.												.				78	68					.
OFE02	300	.	.	.	.	.	.	.	.	.	.	.	.	.	.	.	.	0	4	1	26	20	.	.	.	.	.
	500	.			.												.				78	68					.
OFER2	300	.	.	.	.	.	.	.	.	.	.	.	.	.	.	.	.	0	4	1	26	20	.	.	.	.	.
	500	.			.												.				78	68					.
OFM01	300	.	.	.	.	.	.	.	.	.	.	.	.	.	.	.	.	0	4	1	26	20	.	.	.	.	.
	500	.			.												.				78	68					.
OFM02	300	.	.	.	.	.	.	.	.	.	.	.	.	.	.	.	.	0	4	1	26	20	.	.	.	.	.
	500	.			.												.				78	68					.
OFMR1	300	.	.	.	.	.	.	.	.	.	.	.	.	.	.	.	.	0	4	1	26	20	.	.	.	.	.
	500	.			.												.				78	68					.
OFMR2	300	.	.	.	.	.	.	.	.	.	.	.	.	.	.	.	.	0	4	1	26	20	.	.	.	.	.
	500	.			.												.				78	68					.
OFNP1	300	.	.	.	.	.	.	.	.	.	.	.	.	.	.	.	.	0	4	1	26	20	.	.	.	.	.
	500	.			.												.				78	68					.
OFWP1	300	.	.	.	.	.	.	.	.	.	.	.	.	.	.	.	.	0	4	1	26	20	.	.	.	.	.
	500	.			.												.				78	68					.
OPAI1	500	C	.	.	.	.	.	.	.	1	.	.	.	1	.	.	B	0	4	2	26	20	.	.	.	.	.
	1100	.			.												.				78	68					.
OPAS1	500	C	.	.	.	.	.	.	.	1	.	.	.	1	.	.	B	0	4	2	26	20	.	.	.	.	.
	1100	.			.												.				78	68					.
OPCR1	500	C	.	.	.	1	.	.	.	2	.	.	.	1	.	.	B	0	10	2	26	21	.	.	.	Y	.
	.	.			.												.				78	70					.

STRU ROOM CODE LOAD	ROOM NAME	ARCHITECTURAL MATRL+FIN FL	WAL	CLG	CLG HT	DOOR SIZE	NOISE RM	NOISE SC	FLR
OPCT1	OUTPATIENT CHEMOTHERAPY AREA	SV	GLG	AT1	2700	900	30	40	3
		VT	..	.	9-0	3-0	35		60
OPCT2	OUTPATIENT CHEMOTHERAPY TX PREP RM	SV	GLG	AT1	2400	900	30	40	3
		VT	..	.	8-0	3-0	35		60
OPDG1	OUTPATIENT DERMATOLOGY GRENZ RAY RM	VT	GLG	AT1	2400	900	30	40	3
		.	GPT	.	8-0	3-0	35		60
OPDU1	OUTPATIENT DERMATOLOGY UV BOOTH	VT	GPT	AT1	2400	900	30	40	3
		.	..	.	8-0	3-0	35		60
OPEC1	OUTPATIENT ECG TESTING AREA 1BED	VT	GPT	AT1	2400	900	30	40	3
		.	..	.	8-0	3-0	35		60
OPEC2	OUTPATIENT ECG WORK AREA 1 STATION	VT	GPT	AT1	2400	900	30	40	3
		.	..	.	8-0	3-0	35		60
OPEE1	OUTPATIENT EEG TESTING AREA 1 STA.	VT	GPT	AT1	2400	900	30	40	3
		.	..	.	8-0	3-0	35		60
OPEE2	OUTPATIENT EEG WORK AREA 1 STATION	VT	GPT	AT1	2400	900	25	40	3
		.	..	.	8-0	3-0	30		60
OPEM1	OUTPATIENT ESOPHAGEAL MOTILITY	SV	GPT	AT1	2400	900	30	40	3
		.	..	.	8-0	3-0	35		60
OPHM1	OUTPATIENT HOLTER MONITOR ROOM	VT	GPT	AT1	2400	900	30	40	3
		.	..	.	8-0	3-0	35		60
OPIA1	OUTPATIENT IMPEDANCE AUDIOMETRY	CP	GPT	AT1	2400	900	25	40	3
		.	..	.	8-0	3-0	30		60
OPIR1	OUTPATIENT IMMUNIZATION ROOM	VT	GLG	AT2	2700	1050	35	40	3
		SV	..	.	9-0	3-6	40		60
OPNR1	OUTPATIENT NEPHROLOGY RENAL STUDY	SV	GLG	AT2	2700	900	30	40	3
		.	..	.	9-0	3-0	35		60
OPPE1	OUTPATIENT PHONO/ECHOCARDIOGRAPH T	CP	GAF	AT1	2400	1050	30	40	3
		VT	GPT	.	8-0	3-6	35		60
OPPF1	OUTPATIENT PULMO FUNCT LAB	VT	GPT	AT1	2700	900	30	40	3
		.	..	.	9-0	3-0	35		60
OPPF2	OUTPATIENT PULMO FUNCT FLOW LOOP	VT	GPT	AT1	2700	900	35	50	3
		.	..	.	9-0	3-0	40		60

APPENDIX A
ARCHITECTURAL AND ENGINEERING DESIGN REQUIREMENTS

	ELECTRICAL					MEDICAL GASES											HVAC									
						M	D				D	D	L													
ROOM	LIGHT		EM PWR			C	C	L	P	M	H	L	D	O	N	N				TEMP		R	FL		E	
CODE	LEV	N	PWR	LT	N	A	A	A	A	V	V	V	E	X	O	I	N	BL	AC	OA	SM	WN	H	IN	FN	X	N
OPCT1	500	C	.	.	.	1	.	.	.	1	.	.	.	1	.	.	B	0	4	2	26	20	.	.	.	.	.
	.	.			.												.				78	68					.
OPCT2	500	C	.	.	.	.	.	.	.	.	.	.	.	.	.	.	.	0	6	2	26	20	.	.	.	.	.
	.	.			.												.				78	68					.
OPDG1	500	C	.	.	.	.	.	.	.	.	.	.	.	.	.	.	.	0	4	2	26	20	.	.	.	.	.
	1100	.			.												.				78	68					.
OPDU1	500	A	.	.	.	.	.	.	.	.	.	.	.	.	.	.	.	-	4	2	26	20	.	.	.	.	.
	.	C			.												.				78	68					.
OPEC1	300	C	.	.	.	.	.	.	.	1	.	.	.	1	.	.	.	0	4	2	26	21	.	.	.	.	.
	.	.			.												.				78	70					.
OPEC2	500	C	.	.	.	.	.	.	.	.	.	.	.	.	.	.	.	0	4	2	26	20	.	.	.	.	.
	.	.			.												.				78	68					.
OPEE1	300	A	.	.	.	.	.	.	.	1	.	.	.	1	.	.	.	0	4	2	26	20	.	.	.	.	.
	.	C			.												.				78	68					.
OPEE2	1100	C	.	.	.	.	.	.	.	.	.	.	.	.	.	.	.	0	4	2	26	20	.	.	.	.	.
	.	.			.												.				78	68					.
OPEM1	500	C	.	.	.	.	.	.	.	1	.	.	.	1	.	.	.	0	4	1	26	20	.	.	.	.	.
	.	.			.												.				78	68					.
OPHM1	500	C	.	.	.	.	.	.	.	.	.	.	.	.	.	.	.	0	4	1	26	20	.	.	.	.	.
	.	.			.												.				78	68					.
OPIA1	500	C	.	.	.	.	.	.	.	.	.	.	.	.	.	.	.	0	4	1	26	20	.	.	.	.	.
	.	.			.												.				78	68					.
OPIR1	500	C	.	.	.	.	.	.	.	1	.	.	.	1	.	.	B	0	4	1	26	20	.	.	.	.	.
	.	.			.												.				78	68					.
OPNR1	500	C	.	.	.	.	.	.	.	1	.	.	.	1	.	.	.	+	6	1	26	21	.	.	.	.	.
	1100	.			.												.				78	70					.
OPPE1	500	C	.	.	.	.	.	.	.	1	.	.	.	1	.	.	.	0	4	1	26	21	.	.	.	.	.
	.	.			.												.				78	70					.
OPPF1	500	C	.	.	.	1	.	.	.	1	.	.	.	1	.	.	B	-	6	1.5	26	21	.	.	.	Y	.
	.	.			.												M				78	70					.
OPPF2	500	C	.	.	.	1	.	.	.	1	.	.	.	1	.	.	B	0	4	2	26	21	.	.	.	.	.
	.	.			.												M				78	70					.

APPENDIX A
ARCHITECTURAL AND ENGINEERING DESIGN REQUIREMENTS

STRU ROOM CODE LOAD	ROOM NAME	ARCHITECTURAL MATRL+FIN FL	WAL	CLG	CLG HT	DOOR SIZE	NOISE RM	NOISE SC	FLR
OPPF3	OUTPATIENT PULMO FUNCT AUTOMATED	VT	GPT	AT1	2700	900	35	50	3
		.	..	.	9-0	3-0	40		60
OPPF4	OUTPATIENT PULMO FUNCT BODY BOX	VT	GPT	AT1	2700	900	35	50	3
		.	..	.	9-0	3-0	40		60
OPPF5	OUTPATIENT PULMO FUNCT TREADMILL RM	VT	GPT	AT1	2700	900	35	50	3
		.	..	.	9-0	3-0	40		60
OPPF6	OUTPATIENT PULMO FUNCT SLEEP STUDY	CP	GPT	AT1	2600	900	20	50	3
		.	..	.	8-6	3-0	25		60
OPPM1	OUTPATIENT PACEMAKER WORKROOM	VT	GPT	AT1	2400	900	30	40	3
		.	..	.	8-0	3-0	35		60
OPPS1	OUTPATIENT PULMO FUNCT SCREENING	VT	GPT	AT1	2400	900	30	40	3
		.	..	.	8-0	3-0	35		60
OPRC1	OUTPATIENT RESPIRATORY CLEANING RM	VT	GLG	AT1	2400	900	30	40	3
		.	..	.	8-0	3-0	35		60
OPRM1	OUTPATIENT RESPIRATORY MAINTENANCE	VT	GLG	AT1	2400	900	30	40	3
		.	..	.	8-0	3-0	35		60
OPRT1	OUTPATIENT RESPIRATORY TX CUBICLES	VT	GLG	AT1	2400	900	30	40	3
		.	..	.	8-0	3-0	35		60
OPSS1	OUTPATIENT SOLAR SIMULATOR ROOM	VT	GPT	AT1	2400	900	30	40	3
		.	..	.	8-0	3-0	35		60
OPST1	OUTPATIENT STRESS TESTING ROOM	VT	GPT	AT1	2700	900	35	50	3
		.	..	.	9-0	3-0	40		60
OPSW1	OPTICAL SERVICE WORK AREA(FABRICATE	VT	GPT	AT1	2400	900	30	40	3
		.	..	.	8-0	3-0	35		60
OPTM1	OUTPATIENT TREADMILL ROOM	VT	GPT	AT1	2700	900	35	50	3
		.	.	.	9-0	3-0	40		60
OPVC1	OUTPATIENT VECTORCARDIOGRAPHY TEST	VT	GPT	AT1	2400	900	30	40	3
		.	..	.	8-0	3-0	35		60
OPVL1	OUTPATIENT VASCULAR LAB BASIC	SV	GLG	AT1	2400	1050	30	40	3
		VT	GPT	.	8-0	3-6	35		60
OPVL2	OUTPATIENT VASCULAR LAB ADVANCED	SV	GLG	AT1	2400	1050	30	40	3
		VT	GPT	.	8-0	3-6	35		60

APPENDIX A
ARCHITECTURAL AND ENGINEERING DESIGN REQUIREMENTS

	ELECTRICAL					MEDICAL GASES											HVAC									
						M	D				D	D	L													
ROOM	LIGHT		EM PWR			C	C	L	P	M	H	L	D	O	N	N				TEMP		R	FL		E	
CODE	LEV	N	PWR	LT	N	A	A	A	A	V	V	V	E	X	O	I	N	BL	AC	OA	SM	WN	H	IN	FN	X	N
OPPF3	500	C	.	.	.	1	.	.	.	1	.	.	.	1	.	.	B	0	4	2	26	21	.	.	.	.	.
	.	.			.												M				78	70					.
OPPF4	500	C	.	.	.	1	.	.	.	1	.	.	.	1	.	.	B	0	4	2	26	21	.	.	.	.	.
	.	.			.												M				78	70					.
OPPF5	500	C	.	.	.	.	.	.	.	1	.	.	.	1	.	.	.	-	4	2	26	21	.	.	.	.	.
	.	.			.												.				78	70					.
OPPF6	100	A	.	.	.	.	.	.	.	.	.	.	.	.	.	.	.	0	4	2	26	21	.	.	.	.	.
	.	.			.												.				78	70					.
OPPM1	1100	C	.	.	.	.	.	.	.	.	.	.	.	.	.	.	.	0	4	2	26	21	.	.	.	.	.
	.	.			.												.				78	70					.
OPPS1	500	C	.	.	.	1	.	.	.	1	.	.	.	1	.	.	B	0	4	2	26	21	.	.	.	.	.
	.	.			.												.				78	70					.
OPRC1	1100	.	.	.	.	1	.	.	.	1	.	.	.	1	.	.	B	0	6	2	26	20	.	.	.	Y	L
	.	.			.												.				78	68					.
OPRM1	300	.	.	.	.	1	.	.	.	1	.	.	.	1	.	.	B	0	4	2	26	20	.	.	.	.	.
	700	.			.												.				78	68					.
OPRT1	500	C	.	.	.	1	.	.	.	1	.	.	.	1	.	.	B	0	4	2	26	21	.	.	.	.	.
	.	.			.												.				78	70					.
OPSS1	500	A	.	.	.	.	.	.	.	.	.	.	.	.	.	.	.	0	4	2	26	20	.	.	.	.	.
	.	.			.												.				78	68					.
OPST1	500	C	.	.	.	1	.	.	.	1	.	.	.	1	.	.	B	0	4	2	26	21	.	.	.	.	.
	.	.			.												.				78	70					.
OPSW1	1100	C	.	.	.	.	.	.	.	.	.	.	.	.	.	.	.	0	4	1	26	20	.	.	.	.	.
	.	.			.												.				78	68					.
OPTM1	500	C	.	.	.	1	.	.	.	1	.	.	.	1	.	.	B	0	4	2	26	21	.	.	.	.	.
	.	.			.												.				78	70					.
OPVC1	500	C	.	.	.	1	.	.	.	1	.	.	.	1	.	.	B	0	4	2	26	20	.	.	.	.	.
	.	.			.												.				78	68					.
OPVL1	500	C	.	.	.	1	.	.	.	1	.	.	.	1	.	.	B	-	4	2	26	21	.	.	.	.	.
	1100	.			.												.				78	70					.
OPVL2	500	C	.	.	U	1	.	.	.	1	.	.	.	1	.	.	B	0	4	2	26	21	.	.	.	.	.
	1100	.			.												.				78	70					.

STRU ROOM CODE LOAD	ROOM NAME	ARCHITECTURAL MATRL+FIN FL	WAL	CLG	CLG HT	DOOR SIZE	NOISE RM	NOISE SC	FLR
ORCH1	OR CARDIAC MONITORING	SV	GLG	AT1	3000	K	30	40	3
		.	..	.	10-0		35		60
ORCM1	OPERATING ROOM CARDIAC MONITORING	ET	GCT	GLG	3000	K	30	40	3
		SV	GLG	.	10-0		35		60
ORCS1	OPERATING ROOM CYSTOSCOPIC SURGERY	ET	GCT	GLG	3000	K	30	45	3
		SV	GLG	.	10-0		35		60
ORCT1	OPERATING ROOM CARDIOTHORACIC SURG	ET	GCT	GLG	3000	K	30	45	3
		SV	GLG	.	10-0		35		60
ORCW1	OPERATING ROOM CLEAN WORK AREA	ET	GCT	GLG	2700	1050	30	45	3
		SV	GLG	.	9-0	3-6	35		60
ORDA1	OPERATING ROOM DECONTAMINATION AR.	CT	GCT	GLG	2700	1050	30	45	3
		SV	GLG	.	9-0	3-6	35		60
OREC1	OPERATING ROOM EQUIPMENT CLEANUP	VT	GCT	GLG	2700	900	30	45	3
		SV	GLG	.	9-0	3-0	35		60
ORGS1	OPERATING ROOM GENERAL SURGERY	ET	GCT	GLG	3000	K	30	45	3
		SV	GLG	.	10-0		35		60
ORHL1	OPERATING ROOM HEART LUNG PUMP ROOM	ET	GCT	GLG	3000	K	.	.	3
		SV	GLG	.	10-0		.		60
ORNE1	OPERATING ROOM NEUROSURG EQUIP STOR	SV	GLG	GLG	3000	1200	.	.	6
		.	..	.	10-0	4-0	.		125
ORNM1	OPERATING ROOM NEUROSURG MONITORING	SV	GLG	GLG	3000	K	30	45	3
		.	..	.	10-0		35		60
ORNS1	OPERATING ROOM NEUROSURGERY	ET	GCT	GLG	3000	K	30	45	3
		SV	GLG	.	10-0		35		60
OROE1	OPERATING ROOM ORTHOPEDIC EQUIP SR	SV	GLG	GLG	3000	1200	40	40	6
		.	..	.	10-0	4-0	45		125
OROP1	OPERATING ROOM OUTPATIENT SURGERY	ET	GCT	GLG	3000	K	30	45	3
		SV	GLG	.	10-0		35		60
OROS1	OPERATING ROOM ORTHOPEDIC SURGERY	ET	GCT	GLG	3000	K	30	45	3
		SV	GLG	.	10-0		35		60
ORPC1	OPERATING ROOM PLASTER CART STORAGE	SV	GLG	GLG	2700	1050	30	40	3
		.	..	.	9-0	3-6	35		60

APPENDIX A
ARCHITECTURAL AND ENGINEERING DESIGN REQUIREMENTS

	ELECTRICAL					MEDICAL GASES											HVAC									
						M	D				D	D	L													
ROOM	LIGHT		EM PWR			C	C	L	P	M	H	L	D	O	N	N				TEMP		R	FL		E	
CODE	LEV	N	PWR	LT	N	A	A	A	A	V	V	V	E	X	O	I	N	BL	AC	OA	SM	WN	H	IN	FN	X	N
ORCH1	2100	D	RA	LB	.	2	.	.	.	4	.	.	.	2	.	.	B	0	6	2	24	20	.	90	.	.	.
.		F			.												.				75	70					.
ORCM1	2100	D	RA	LB	.	2	.	.	.	4	.	.	.	2	.	.	B	-	6	2	24	20	.	.	.	.	.
.		F			.												.				75	70					.
ORCS1	2100	D	RA	LB	.	1	.	.	.	3	.	.	.	1	1	.	D	++	25	5	20	24	Y	90	90	Y	C
.		F			.												.				68	75					.
ORCT1	2100	D	RA	LB	.	4	.	.	.	7	.	.	.	4	2	2	D	++	25	5	20	24	Y	90	99	Y	C
.		F			.												F				68	75					.
ORCW1	1100	F	R	L	.	.	.	.	.	.	.	.	.	.	.	.	.	+	6	2	20	24	.	90	.	.	.
.		.			.												.				68	75					.
ORDA1	300	.	R	L	.	1	.	.	.	1	.	.	.	1	.	1	I	--	10	2.5	24	.	.	90	.	Y	L
.		.			.												.				75	.					.
OREC1	300	.	R	L	.	1	.	.	.	1	.	.	.	1	.	1	I	+	6	2	24	.	.	.	.	Y	.
.		.			.												.				75	.					.
ORGS1	2100	D	RA	LB	.	4	.	.	.	7	.	.	.	4	2	2	D	++	25	5	20	24	Y	90	90	.	C
.		F			.												F				68	75					.
ORHL1	200	.	.	LS	.	.	.	.	.	.	.	.	.	.	.	.	.	++	25	5	20	24	Y	90	99	.	C
.		.			.												.				68	75					.
ORNE1	200	.	.	LS	.	.	.	.	.	.	.	.	.	.	.	.	.	+	6	1.5	24	24	.	90	.	.	.
.		.			.												.				75	75					.
ORNM1	300	A	RA	L	.	1	.	.	.	3	.	.	.	1	.	.	B	0	6	2	26	21	.	90	.	.	.
.		.			.												D				78	70					.
ORNS1	2100	D	RA	LB	.	4	.	.	.	7	.	.	.	4	2	2	D	++	25	5	20	24	Y	90	99	.	C
.		F			.												F				68	75					.
OROE1	200	.	.	LS	.	.	.	.	.	.	.	.	.	.	.	.	.	+	6	1.5	24	24	.	90	.	.	.
.		.			.												.				75	75					.
OROP1	2100	D	RA	LB	.	4	.	.	.	7	.	.	.	4	2	2	D	+	25	5	20	24	Y	90	.	.	C
.		F			.												F				68	75					.
OROS1	2100	D	RA	LB	.	4	.	.	.	7	.	.	.	4	2	2	D	++	25	5	20	24	Y	90	99	.	C
.		F			.												F				68	75					.
ORPC1	50	.	.	LB	.	.	.	.	.	.	.	.	.	.	.	.	.	0	4	1	24	24	.	90	.	.	.
.		.			.												.				75	75					.

APPENDIX A
ARCHITECTURAL AND ENGINEERING DESIGN REQUIREMENTS

STRU ROOM CODE LOAD	ROOM NAME	ARCHITECTURAL MATRL+FIN FL	WAL	CLG	CLG HT	DOOR SIZE	NOISE RM	SC	FLR
ORPH1	OPERATING ROOM PATIENT HOLDING AREA	SV	GLG	GLG	2700	1200	30	40	3
		VT	..	.	9-0	4-0	35		60
ORPH2	OPERATING ROOM PREP/HOLD WORKSTATIO	VT	GLG	GLG	2700	1200	30	40	3
		SV	..	.	9-0	4-0	35		60
ORPP1	OPERATING ROOM PATIENT PREP/INDUCT	VT	GLG	GLG	2700	1200	30	40	3
		SV	..	.	9-0	4-0	35		60
ORSA1	OPERATING ROOM SCRUB AREA, 2 SINK	VT	GLG	GLG	2700	OPEN	30	40	3
		SV	..	.	9-0	OPEN	35		60
ORSR1	OPERATING ROOM SUBSTERILE ROOM	ET	GLG	GLG	2700	900	30	40	3
		SV	..	.	9-0	3-0	35		60
ORSS1	OPERATING ROOM STERILE STORAGE	VT	GLG	GLG	2700	900	40	40	6
		SV	..	.	9-0	3-0	45		125
OTBR1	OCC. THERAPY, BRACE/ORTHOTICS SHOP	VT	GPT	AT1	2700	1050	30	45	3
		.	..	.	9-0	3-6	35		60
OTCA1	OCC. THERAPY, COMPUTER ASSIST THER.	CP	GPT	AT1	2700	1050	30	45	3
		.	..	.	9-0	3-6	35		60
OTCL1	OCC. THERAPY, CHILD LIFE AREA	CP	GPT	AT1	2700	1050	30	45	3
		.	..	.	9-0	3-6	35		60
OTDL1	OCC. THERAPY, DAILY LIVING SKILLS	CP	GPT	AT1	2700	1050	35	45	3
		VT	..	.	9-0	3-6	40		60
OTEF1	OCC. THERAPY EXCEPTIONAL FAMILY MBR	CP	GPT	AT1	2700	900	30	45	3
		.	..	.	9-0	3-0	35		60
OTEV1	OCC. THERAPY, EVALUATION AREA	CP	GPT	AT1	2700	1050	30	45	3
		.	..	.	9-0	3-6	35		60
OTGC1	OCC. THERAPY, GENERAL CLINIC AREA	CP	GPT	AT1	2700	900	30	45	3
		.	..	.	9-0	3-0	35		60
OTPE1	OCC. THERAPY, POWER EQUIPMENT SHOP	VT	GPT	AT1	2700	900	70	50	3
		.	..	.	9-0	3-0	80		60
OTPE2	OCC. THERAPY, POWER EQUIP, MED CEN	VT	GPT	AT1	2700	900	30	40	C
		.	..	.	9-0	3-0	35		
OTSI1	OCC. THERAPY, SENSORY INTEGRATIVE D	CP	GPT	AT1	2700	900	30	40	3
		.	..	.	9-0	3-0	35		60

APPENDIX A
ARCHITECTURAL AND ENGINEERING DESIGN REQUIREMENTS

	ELECTRICAL					MEDICAL GASES											HVAC									
						M	D				D	D	L													
ROOM	LIGHT		EM PWR			C	C	L	P	M	H	L	D	O	N	N				TEMP		R	FL		E	
CODE	LEV	N	PWR	LT	N	A	A	A	A	V	V	V	E	X	O	I	N	BL	AC	OA	SM	WN	H	IN	FN	X	N
ORPH1	200	C	.	L	.	1	.	.	.	1	.	.	.	1	.	.	B	0	6	2	24	24	.	90	.	.	.
	.	.			.												.				75	75					.
ORPH2	500	C	R	L	.	1	.	.	.	1	.	.	.	1	.	.	B	0	6	2	24	24	.	90	.	.	.
	1100	.			.												.				75	75					.
ORPP1	500	C	R	L	.	1	.	.	.	1	.	.	.	1	.	.	B	-	6	2	24	24	.	90	.	Y	.
	1100	.			.												.				75	75					.
ORSA1	1100	A	.	L	.	.	.	.	.	.	.	.	.	.	.	.	.	+	6	2	24	24	.	90	.	.	.
	.	C			.												.				75	75					.
ORSR1	500	.	.	L	.	.	.	.	.	.	.	.	.	.	.	.	.	+	6	2	24	24	.	90	.	.	.
	.	.			.												.				75	75					.
ORSS1	200	.	.	LS	.	.	.	.	.	.	.	.	.	.	.	.	.	+	6	2	24	.	.	90	.	.	.
	.	.			.												.				75	24					.
OTBR1	500	C	.	.	.	.	.	1	1	.	.	.	1	.	.	.	B	0	4	2	26	20	.	.	.	.	M
	.	.			.												.				78	68					.
OTCA1	500	C	.	.	.	.	.	.	.	.	.	.	.	.	.	.	.	0	4	2	26	20	.	.	.	.	M
	.	.			.												.				78	68					.
OTCL1	500	C	.	.	.	.	.	.	.	.	.	.	.	.	.	.	.	0	4	2	26	20	.	.	.	.	.
	.	.			.												.				78	68					.
OTDL1	500	C	.	.	.	.	.	.	.	.	.	.	.	.	.	.	.	-	4	2	26	20	.	.	.	.	.
	.	.			.												.				78	68					.
OTEF1	500	C	.	.	.	.	.	.	.	.	.	.	.	.	.	.	.	-	4	2	26	20	.	.	.	.	.
	.	.			.												.				78	68					.
OTEV1	500	C	.	.	.	.	.	.	.	.	.	.	.	.	.	.	.	0	4	2	26	20	.	.	.	.	.
	.	.			.												.				78	68					.
OTGC1	500	C	.	.	.	.	.	.	.	.	.	.	.	.	.	.	.	0	4	1	26	20	.	.	.	.	.
	.	.			.												.				78	68					.
OTPE1	500	C	.	.	.	.	.	.	1	.	.	.	.	.	.	.	.	0	6	1.5	26	20	.	.	.	.	.
	700	.			.												.				78	68					.
OTPE2	500	C	.	.	.	.	.	.	1	.	.	.	.	.	.	.	.	0	4	1	26	20	.	.	.	.	.
	700	.			.												.				78	68					.
OTSI1	500	C	.	.	.	.	.	.	.	.	.	.	.	.	.	.	.	0	4	1	26	20	.	.	.	.	.
	.	.			.												.				78	68					.

APPENDIX A
ARCHITECTURAL AND ENGINEERING DESIGN REQUIREMENTS

STRU ROOM CODE LOAD	ROOM NAME	ARCHITECTURAL MATRL+FIN FL	WAL	CLG	CLG HT	DOOR SIZE	NOISE RM	NOISE SC	FLR
OTWT1	OCC. THERAPY, WORK THERAPY AREA	CP	GPT	AT1	2700	900	30	45	3
		VT	..	.	9-0	3-0	35		60
PAIA1	PATIENT ADMIN INTERVIEW AREA	CP	GPT	AT1	2400	900	30	40	3
		.	..	.	8-0	3-0	35		60
PARS1	MED RECORDS STORAGE, FIXED AISLES	VT	GPT	AT1	2700	900	30	40	5
		.	..	.	9-0	3-0	35		100
PARS2	MED RECORDS STORAGE, MOVABLE AISLE	VT	GPT	AT1	2700	900	30	40	5
		.	..	.	9-0	3-0	35		100
PART1	MED RECORDS TRANSCRIPTION AREA	CP	GPT	AT1	2700	900	30	40	5
		.	..	.	9-0	3-0	35		100
PART2	MED RECORDS TRANSCRIPTION EQUIP	VT	GPT	AT1	2700	900	30	40	5
		.	..	.	9-0	3-0	35		100
PARW1	MED RECORDS WORKROOM, DICTATE	CP	GPT	AT1	2700	900	30	40	5
		.	..	.	9-0	3-0	35		100
PARW2	MED RECORDS WORKROOM, CARRELS	CP	GPT	AT1	2700	900	30	40	5
		.	..	.	9-0	3-0	35		100
PEHS1	PHYSICAL EVAL HEARING SCREEN 1 MAN	CP	GAF	AT1	2700	900	30	45	3
		VT	GPT	.	9-0	3-0	35		60
PEHS2	PHYSICAL EVAL HEARING SCREEN 4 MAN	CP	GAF	AT1	2700	900	30	45	3
		VT	GPT	.	9-0	3-0	35		60
PEHS3	PHYSICAL EVAL HEARING SCREEN 6 MAN	CP	GAF	AT1	2700	900	30	45	3
		VT	GPT	.	9-0	3-0	35		60
PEHS4	PHYSICAL EVAL HEARING SUITE(2 ROOM)	CP	GAF	AT1	2700	900	30	45	3
		VT	GPT	.	9-0	3-0	35		60
PEHS6	PHYSICAL EVAL PEDS HEARING/VISION S	CP	GAF	AT1	2400	900	30	45	3
		VT	GPT	.	8-0	3-0	35		60
PEHW1	PHYSICAL EVAL HEIGHT AND WEIGHT	VT	GPT	AT1	2400	900	35	40	3
		.	..	.	8-0	3-0	40		60
PEVH2	PHYSICAL EVAL VISION/HEARING PEDS	VT	GPT	AT1	2400	900	30	40	3
		.	..	.	8-0	3-0	35		60
PEVS1	PHYSICAL EVAL VISION SCREENING	VT	GPT	AT1	2400	900	30	40	3
		.	..	.	8-0	3-0	35		60

APPENDIX A
ARCHITECTURAL AND ENGINEERING DESIGN REQUIREMENTS

ROOM CODE	ELECTRICAL LIGHT LEV	ELECTRICAL LIGHT N	ELECTRICAL EM PWR PWR	ELECTRICAL EM PWR LT	ELECTRICAL EM PWR N	MEDICAL GASES CA	MEDICAL GASES CA	MEDICAL GASES LA	MEDICAL GASES PA	MEDICAL GASES MV	MEDICAL GASES HV	MEDICAL GASES LV	MEDICAL GASES DE	MEDICAL GASES OX	MEDICAL GASES NO	MEDICAL GASES NI	MEDICAL GASES N	HVAC BL	HVAC AC	HVAC OA	HVAC TEMP SM	HVAC TEMP WN	HVAC RH	HVAC FL IN	HVAC FL FN	HVAC EX	HVAC N
OTWT1	500	C	.	.	.	.	.	.	.	.	.	.	.	.	.	.	.	0	6	2	26	20	.	.	.	.	.
	.	.			.												.				78	68					.
PAIA1	500	.	.	.	.	.	.	.	.	.	.	.	.	.	.	.	.	0	4	1	26	20	.	.	.	.	.
	.	.			.												.				78	68					.
PARS1	300	.	.	LE	.	.	.	.	.	.	.	.	.	.	.	.	.	0	4	1	26	20	.	.	.	.	.
	.	.			.												.				78	68					.
PARS2	300	.	.	LE	.	.	.	.	.	.	.	.	.	.	.	.	.	0	4	1	26	20	.	.	.	.	.
	.	.			.												.				78	68					.
PART1	700	.	.	LE	.	.	.	.	.	.	.	.	.	.	.	.	.	0	4	1	26	20	.	.	.	.	.
	.	.			.												.				78	68					.
PART2	200	.	.	LE	.	.	.	.	.	.	.	.	.	.	.	.	.	0	4	1	26	20	.	.	.	.	.
	.	.			.												.				78	68					.
PARW1	300	.	.	LE	.	.	.	.	.	.	.	.	.	.	.	.	.	0	4	1	26	20	.	.	.	.	.
	.	.			.												.				78	68					.
PARW2	300	.	.	LE	E	.	.	.	.	.	.	.	.	.	.	.	.	0	4	1	26	20	.	.	.	.	.
	.	.			.												.				78	68					.
PEHS1	500	C	.	.	.	.	.	.	.	.	.	.	.	.	.	.	.	0	4	1	26	20	.	.	.	.	.
	.	.			.												.				78	68					.
PEHS2	500	C	.	.	.	.	.	.	.	.	.	.	.	.	.	.	.	0	4	1	26	20	.	.	.	.	.
	.	.			.												.				78	68					.
PEHS3	500	C	.	.	.	.	.	.	.	.	.	.	.	.	.	.	.	0	4	1	26	20	.	.	.	.	.
	.	.			.												.				78	68					.
PEHS4	500	C	.	.	.	.	.	.	.	.	.	.	.	.	.	.	.	0	4	1	26	20	.	.	.	.	.
	.	.			.												.				78	68					.
PEHS6	500	C	.	LE	.	.	.	.	.	.	.	.	.	.	.	.	.	0	4	1	26	20	.	.	.	.	.
	.	.			.												.				78	68					.
PEHW1	500	C	.	.	.	.	.	.	.	.	.	.	.	.	.	.	.	0	4	1	26	20	.	.	.	.	.
	.	.			.												.				78	68					.
PEVH2	500	C	.	.	.	.	.	.	.	.	.	.	.	.	.	.	.	0	4	1	26	20	.	.	.	.	.
	.	.			.												.				78	68					.
PEVS1	500	C	.	.	.	.	.	.	.	.	.	.	.	.	.	.	.	0	4	1	26	20	.	.	.	.	.
	.	.			.												.				78	68					.

STRU ROOM CODE	ROOM NAME	ARCHITECTURAL MATRL+FIN FL	WAL	CLG	CLG HT	DOOR SIZE	NOISE RM	NOISE SC	FLR LOAD
PEWM1	PHYSICAL EVAL WEIGHTS AND MEASURES	VT	GPT	AT1	2400	900	35	40	3
		.	..	.	8-0	3-0	40		60
PEWM2	PHYSICAL EVAL WEIGHTS AND MEASURES	VT	GPT	AT1	2400	900	35	40	3
		.	..	.	8-0	3-0	40		60
PEWM4	PHYSICAL EVAL WEIGHTS&MEA. PED 2 ST	VT	GPT	AT1	2400	900	35	40	3
		.	..	.	8-0	3-0	40		60
PHIV1	PHARMACY IV ADMIXTURE CENTER	VT	GLG	AT2	2700	900	35	40	3
		SV	..	.	9-0	3-0	40		60
PHIV2	PHARMACY IV ADMIXTURE W/CLASS B HD	VT	GLG	AT2	2700	900	35	40	3
		SV	..	.	9-0	3-0	40		60
PHIV3	PHARMACY IV ADMIXTURE SATELLITE	VT	GLG	AT2	2700	900	35	40	3
		SV	..	.	9-0	3-0	40		60
PHIV4	PHARMACY IV ADMIXTURE SATE. W/B HD	VT	GLG	AT2	2700	900	35	40	3
		SV	..	.	9-0	3-0	40		60
PHMP1	PHARMACY MANUFACTURING & PREPACK	VT	GLG	AT2	2700	900	35	40	5
		.	..	.	9-0	3-0	40		100
PHOD1	PHARMACY OUTPATIENT DISPENSING MAIN	CP	GLG	AT1	2700	1050	35	40	5
		VT	GPT	.	9-0	3-6	40		100
PHOD2	PHARMACY OUTPATIENT DISP. SATELLITE	CP	GLG	AT1	2700	1050	35	40	5
		VT	GPT	.	9-0	3-6	40		100
PHUD1	PHARMACY UNIT DOSE CENTER	SV	GLG	AT2	2700	900	35	40	3
		VT	GPT	.	9-0	3-0	40		60
PHUD2	PHARAMCY UNIT DOSE SATELLITE	SV	GLG	AT1	2700	900	35	40	3
		VT	GPT	.	9-0	3-0	40		60
PLAY1	PLAYROOM, PEDIATRICS	CP	GVF	AT1	2700	1200	35	45	3
		.	GPT	.	9-0	4-0	40		60
PLAY2	PLAYROOM, ADOLESCENT LOUNGE	CP	GVF	AT1	2700	1200	35	45	3
		.	GPT	.	9-0	4-0	40		60
PMCW1	PLANT MAINTENANCE, COMMON WORK AREA	VT	GPT	AT1	2700	SP	35	50	5
		GS	..	.	9-0	SP	40		100
PMDR1	PLANT MAINTENANCE, DRAFTING ROOM	CP	GPT	AT1	2700	900	35	40	3
		VT	..	.	9-0	3-0	40		60

APPENDIX A
ARCHITECTURAL AND ENGINEERING DESIGN REQUIREMENTS

	ELECTRICAL					MEDICAL GASES											HVAC									
						M	D				D	D	L													
ROOM	LIGHT		EM PWR			C	C	L	P	M	H	L	D	O	N	N				TEMP		R	FL		E	
CODE	LEV	N	PWR	LT	N	A	A	A	A	V	V	V	E	X	O	I	N	BL	AC	OA	SM	WN	H	IN	FN	X	N
PEWM1	300	C	.	.	.	.	.	.	.	.	.	.	.	.	.	.	.	0	4	1	26	20	.	.	.	.	.
	.	.			.												.				78	68					.
PEWM2	300	C	.	.	.	.	.	.	.	.	.	.	.	.	.	.	.	0	4	1	26	20	.	.	.	.	.
	.	.			.												.				78	68					.
PEWM4	300	C	.	.	.	.	.	.	.	.	.	.	.	.	.	.	.	0	4	1	26	20	.	.	.	.	.
	.	.			.												.				78	68					.
PHIV1	1100	F	R	L	.	.	.	1	.	1	.	.	.	.	.	.	B	+	4	2	26	20	.	.	.	.	.
	.	.			.												.				78	68					.
PHIV2	1100	F	R	L	.	.	.	1	.	1	.	.	.	.	.	.	B	+	4	2	26	20	.	.	.	.	.
	.	.			.												.				78	68					.
PHIV3	1100	F	R	L	.	.	.	1	.	1	.	.	.	.	.	.	B	+	4	2	26	20	.	.	.	.	.
	.	.			.												.				78	68					.
PHIV4	1100	F	R	L	.	.	.	1	.	1	.	.	.	.	.	.	B	+	4	2	26	20	.	.	.	.	.
	.	.			.												.				78	68					.
PHMP1	1100	F	R	L	.	.	.	1	.	1	.	.	.	.	.	.	B	+	4	2	26	20	.	.	.	.	.
	.	.			.												.				78	68					.
PHOD1	1100	F	R	L	.	.	.	.	.	.	.	.	.	.	.	.	.	+	4	2	26	20	.	.	.	.	.
	.	.			.												.				78	68					.
PHOD2	1100	F	R	L	.	.	.	.	.	.	.	.	.	.	.	.	.	+	4	2	26	20	.	.	.	.	.
	.	.			.												.				78	68					.
PHUD1	1100	F	R	L	.	.	.	1	.	1	.	.	.	.	.	.	B	+	4	2	26	20	.	.	.	.	.
	.	.			.												.				78	68					.
PHUD2	1100	F	R	L	.	.	.	1	.	1	.	.	.	.	.	.	B	+	4	2	26	20	.	.	.	.	.
	.	.			.												.				78	68					
PLAY1	300	.	.	.	.	.	.	.	.	1	.	.	.	1	.	.	A	0	6	1.5	26	21	.	.	.	.	.
	.	.			.												.				78	70					.
PLAY2	300	.	.	.	.	.	.	.	.	1	.	.	.	1	.	.	A	0	6	1.5	26	21	.	.	.	.	.
	.	.			.												.				78	70					.
PMCW1	300	.	.	.	.	.	.	.	1	.	.	.	.	.	.	.	.	0	6	1	26	21	.	.	.	Y	L
	700	.			.												.				78	70					.
PMDR1	500	.	.	.	.	.	.	.	.	.	.	.	.	.	.	.	.	0	4	1	26	20	.	.	.	.	.
	1100	.			.												.				78	68					.

APPENDIX A
ARCHITECTURAL AND ENGINEERING DESIGN REQUIREMENTS

STRU ROOM CODE LOAD	ROOM NAME	ARCHITECTURAL MATRL+FIN FL	WAL	CLG	CLG HT	DOOR SIZE	NOISE RM	NOISE SC	FLR
PMWS1	PLANT MAINTENANCE, WORKSTATION	VT	GPT	AT1	2700	900	35	50	5
		CP	..	.	9-0	3-0	40		100
PTAT1	PHYS THERAPY AMPUTEE TRAINING AREA	VT	GLG	AT2	2700	900	35	40	3
		CP	GPT	.	9-0	3-0	40		60
PTBT1	PHYS THERAPY BACK THERAPY PROGRAM	CP	GLG	AT2	2700	900	35	40	3
		.	GPT	.	9-0	3-0	40		60
PTCB1	PHYS THERAPY CONTRAST BATH STA	SV	GLG	AT2	2700	900	35	40	C
		.	GPT	.	9-0	3-0	40		C
PTCW1	PHYS THERAPY CUBICLE WORKSTATION	VT	GLG	AT2	2700	900	35	40	3
		.	GPT	.	9-0	3-0	40		60
PTEA1	PHYS THERAPY EXERCISE AREA - GYM	VT	GLG	AT2	2700	900	35	40	3
		.	GPT	.	9-0	3-0	40		60
PTEM1	PHYS THERAPY ELECTROMYOGRAPHY (EMG)	VT	GLG	AT2	2700	900	35	40	3
		.	GPT	.	9-0	3-0	40		60
PTEM2	PHYS THERAPY ELECTROMYOGRAPHY WORK	VT	GLG	AT1	2700	900	35	40	3
		.	GPT	.	9-0	3-0	40		60
PTES1	PHYS THERAPY EXERCISE STATION	VT	GLG	AT2	2700	900	35	40	3
		.	GPT	.	9-0	3-0	40		60
PTEW1	PHYS THERAPY EXTREM WHIRLP ARM/LEG	QT	GLG	AT2	2700	900	35	40	C
		CT	CT	.	9-0	3-0	40		C
PTEW2	PHYS THERAPY EXTREM WHIRLP ARM	QT	GLG	AT2	2700	900	35	40	C
		CT	CT	.	9-0	3-0	40		C
PTGL1	PHYS THERAPY GAIT OBS. LANE	SV	GLG	AT2	2700	900	35	40	3
		CT	CT	.	9-0	3-0	40		60
PTGT1	PHYS THERAPY GAIT TANK ROOM	SV	GLG	AT2	2700	900	35	40	C
		CT	CT	.	9-0	3-0	40		C
PTIS1	PHYS THERAPY ISOKINETIC STA - DIAG	VT	GLG	AT2	2700	900	35	40	C
		.	GPT	.	9-0	3-0	40		C
PTIS2	PHYS THERAPY ISOKINETIC STA - EXER	VT	GLG	AT2	2700	900	35	40	3
		.	GPT	.	9-0	3-0	40		60
PTLD1	PHYS THERAPY LINEN AND DRYING AREA	SV	GLG	AT2	2700	900	35	40	3
		VT	..	.	9-0	3-0	40		60

APPENDIX A
ARCHITECTURAL AND ENGINEERING DESIGN REQUIREMENTS

	ELECTRICAL					MEDICAL GASES											HVAC								
						M	D				D	D	L												
ROOM	LIGHT		EM PWR			C	C	L	P	M	H	L	D	O	N	N				TEMP		R	FL		E	
CODE	LEV	N	PWR	LT	N	A	A	A	A	V	V	V	E	X	O	I	N	BL	AC	OA	SM	WN	H	IN	FN	X	N
PMWS1	300	.	.	.	.	.	.	.	1	.	.	.	.	.	.	.	.	0	4	1	26	20	.	.	.	.	.
	700	.			.												.				78	68					.
PTAT1	500	.	.	.	.	.	.	.	1	.	.	.	1	.	.	B	0	6	2		26	21	.	.	.	.	.
	.	.			.											.					78	70					.
PTBT1	500	.	.	.	.	.	.	.	.	.	.	.	.	.	.	.	0	6	2		26	21	.	.	.	.	.
	.	.			.											.					78	70					.
PTCB1	500	.	.	.	.	.	.	.	.	.	.	.	.	.	.	.	-	6	2		26	21	.	.	.	Y	.
	.	.			.											.					78	70					.
PTCW1	500	.	.	.	.	.	.	.	1	.	.	.	1	.	.	B	0	4	2		26	21	.	.	.	.	.
	.	.			.											.					78	70					.
PTEA1	300	.	.	.	.	.	.	.	1	.	.	.	1	.	.	B	-	6	2		26	21	.	.	.	Y	.
	.	.			.											.					78	70					.
PTEM1	500	.	.	.	.	.	.	.	1	.	.	.	1	.	.	B	0	6	2		26	21	.	.	.	.	.
	.	.			.											.					78	70					.
PTEM2	500	.	.	.	.	.	.	.	1	.	.	.	1	.	.	B	0	6	2		26	21	.	.	.	Y	.
	.	.			.											.					78	70					.
PTES1	300	.	.	.	.	.	.	.	1	.	.	.	1	.	.	B	-	6	2		26	21	.	.	.	.	.
	.	.			.											.					78	70					.
PTEW1	200	.	.	.	.	.	.	.	1	.	.	.	1	.	.	B	-	6	2		26	21	.	.	.	Y	.
	.	.			.											.					78	70					.
PTEW2	200	.	.	.	.	.	.	.	1	.	.	.	1	.	.	B	-	6	2		26	21	.	.	.	Y	.
	.	.			.											.					78	70					.
PTGL1	500	.	.	.	.	.	.	.	.	.	.	.	.	.	.	.	0	6	2		26	21	.	.	.	.	.
	.	.			.											.					78	70					.
PTGT1	200	.	.	.	.	.	.	.	.	.	.	.	.	.	.	.	-	6	2		26	21	.	.	.	Y	.
	.	.			.											.					78	70					.
PTIS1	300	.	.	.	.	.	.	.	1	.	.	.	1	.	.	B	-	6	2		26	21	.	.	.	Y	.
	.	.			.											.					78	70					.
PTIS2	500	.	.	.	.	.	.	.	1	.	.	.	1	.	.	B	0	6	2		26	21	.	.	.	.	.
	.	.			.											.					78	70					.
PTLD1	200	.	.	.	.	.	.	.	.	.	.	.	.	.	.	.	-	6	2		26	21	.	.	.	Y	.
	.	.			.											.					78	70					.

APPENDIX A
ARCHITECTURAL AND ENGINEERING DESIGN REQUIREMENTS

STRU ROOM CODE LOAD	ROOM NAME	ARCHITECTURAL MATRL+FIN FL	WAL	CLG	CLG HT	DOOR SIZE	NOISE RM	SC	FLR
PTLW1	PHYS THERAPY LOWBOY WHIRLPOOL	SV	GLG	AT2	2700	900	35	40	C
		.	..	.	9-0	3-0	40		C
PTPR1	PHYS THERAPY PEDIATRIC REHAB	CP	GLG	AT2	2700	900	35	40	3
		VT	GPT	.	9-0	3-0	40		60
PTTC1	PHYS THERAPY TREATMENT CUBICLE	VT	GLG	AT2	2700	900	35	40	3
		GP	GPT	.	9-0	3-0	40		60
PTTP1	PHYS THERAPY THERAPEUTIC POOL	CT	GLG	SSP	2700	900	35	40	C
		QT	CT	.	9-0	3-0	40		C
PTUC1	PHYS THERAPY ULTRASOUND CUBICLE	VT	GLG	AT2	2700	900	35	40	3
		.	..	.	9-0	3-0	40		60
PTWB1	PHYS THERAPY WHOLE BODY TANK	CT	GLG	AT2	2700	900	35	40	3
		QT	CT	.	9-0	3-0	40		60
PTWT1	PHYS THERAPY WHIRLPOOL TX CUBICLE	CT	GLG	AT2	2700	900	35	40	C
		QT	CT	.	9-0	3-0	40		
PTWW1	PHYS THERAPY WHIRLPOOL WORKSTATION	CT	GLG	AT2	2700	900	35	40	C
		QT	CT	..	9-0	3-0	40		
PWST1	PHYS THERAPY WHIRLPOOL TRMT	CT	GLG	AT2	2700	900	35	40	C
		.	CT	.	9-0	3-0	40		C
RAA01	CHAPEL ALTAR	CP	GVF	AT1	2700	OPEN	20	40	3
		.	SP	SP	9-0	OPEN	25		60
RABS1	RELIGIOUS ACTIVITY BLESED SACRAMENT	CP	GVF	AT1	2700	900	20	40	3
		.	SP	SP	9-0	3-0	25		60
RAMR1	RELIGIOUS ACTIVITY MEDITATION ROOM	CP	GVF	AT1	2700	900	20	40	3
		.	GWP	.	9-0	3-0	25		60
RARR1	RELIGIOUS ACTIVITY RECONCILATION RM	CP	GVF	AT1	2700	900	20	40	3
		.	GWP	.	9-0	3-0	25		60
RAS01	CHAPEL SEATING AREA, FIXED SEATS	CP	GVF	AT1	VAR	OPEN	20	40	3
		.	GWP	.	VAR	OPEN	25		60
RASR1	CHAPEL, SACRISTY/STORAGE	CP	GPT	AT1	2700	900	30	40	6
		VT	..	.	9-0	3-0	35		125
RCA01	RESUSCITATION CART ALCOVE	VT	GLG	AT1	2400	OPEN	35	40	3
		.	..	.	8-0	OPEN	40		60

APPENDIX A
ARCHITECTURAL AND ENGINEERING DESIGN REQUIREMENTS

	ELECTRICAL					MEDICAL GASES											HVAC									
						M	D				D	D	L													
ROOM	LIGHT		EM PWR			C	C	L	P	M	H	L	D	O	N	N				TEMP		R	FL		E	
CODE	LEV	N	PWR	LT	N	A	A	A	A	V	V	V	E	X	O	I	N	BL	AC	OA	SM	WN	H	IN	FN	X	N
PTLW1	200	.	.	.	.	.	.	.	.	1	.	.	.	1	.	.	B	-	6	2	26	21	.	.	.	Y	.
	.	.			.												.				78	70					.
PTPR1	500	.	.	.	.	.	.	.	.	1	.	.	.	1	.	.	B	0	6	2	26	21	.	.	.	.	.
	.	.			.												.				78	70					.
PTTC1	500	.	.	.	.	1	.	.	.	1	.	.	.	1	.	.	.	0	4	2	26	21	.	.	.	.	.
	.	.			.												.				78	70					.
PTTP1	200	.	.	.	.	1	.	.	.	1	.	.	.	1	.	.	B	-	6	2	26	21	.	.	.	Y	.
	.	.			.												.				78	70					.
PTUC1	500	.	.	.	.	1	.	.	.	1	.	.	.	1	.	.	B	0	6	2	26	21	.	.	.	.	.
	.	.			.												.				78	70					.
PTWB1	500	.	.	.	.	1	.	.	.	1	.	.	.	1	.	.	B	0	6	2	26	21	.	.	.	.	.
	.	.			.												.				78	70					.
PTWT1	500	.	.	.	.	.	.	.	.	1	.	.	.	1	.	.	B	-	6	2	26	21	.	.	.	.	.
	.	.			.												.				78	70					.
PTWW1	500	.	.	.	.	.	.	.	.	1	.	.	.	1	.	.	B	-	6	2	26	21	.	.	.	.	.
	.	.			.												.				78	70					.
PWST1	200	.	.	.	.	.	.	.	.	1	.	.	.	1	.	.	.	-	6	2	26	21	.	.	.	Y	.
	.	.			.												.				78	70					.
RAA01	300	A	.	.	.	.	.	.	.	.	.	.	.	.	.	.	.	0	4	2	26	20	.	.	.	.	.
	.	.			.												.				78	68					.
RABS1	300	A	.	.	.	.	.	.	.	.	.	.	.	.	.	.	.	0	4	2	26	20	.	.	.	.	.
	.	.			.												.				78	68					.
RAMR1	300	A	.	.	.	.	.	.	.	.	.	.	.	.	.	.	.	0	4	2	26	20	.	.	.	.	.
	.	.			.												.				78	68					.
RARR1	300	A	.	.	.	.	.	.	.	.	.	.	.	.	.	.	.	0	4	2	26	20	.	.	.	.	.
	.	.			.												.				78	68					.
RAS01	150	A	.	LE	.	.	.	.	.	.	.	.	.	.	.	.	.	0	4	2	26	20	.	.	.	.	.
	.	.			.												.				78	68					.
RASR1	100	.	.	.	.	.	.	.	.	.	.	.	.	.	.	.	.	0	4	2	26	20	.	.	.	.	.
	.	.			.												.				78	68					.
RCA01	150	.	R	.	.	.	.	.	.	.	.	.	.	.	.	.	.	0	.	.	.	.	.	.	.	.	K
	.	.			.												.				.	.					.

APPENDIX A
ARCHITECTURAL AND ENGINEERING DESIGN REQUIREMENTS

STRU ROOM CODE LOAD	ROOM NAME	ARCHITECTURAL MATRL+FIN FL	WAL	CLG	CLG HT	DOOR SIZE	NOISE RM	NOISE SC	FLR
RDB01	RENAL DIALYSIS BED STATION COIL	VT	GLG	AT2	2600	1200	30	40	3
		SV	..	.	8-6	4-0	35		60
RDB02	RENAL DIALYSIS BED STATION NEG PRES	VT	GLG	AT2	2600	1200	30	40	3
		SV	..	.	8-6	4-0	35		60
RDB03	RENAL DIALYSIS BED STATION COMBO	VT	GLG	AT2	2600	1200	30	40	3
		SV	..	.	8-6	4-0	35		60
RDC01	RENAL DIALYSIS CHAIR STATION COIL	VT	GLG	AT2	2600	1200	30	40	3
		SV	..	.	8-6	4-0	35		60
RDC02	RENAL DIALYSIS CHAIR STATION NEG PR	VT	GLG	AT2	2600	1200	30	40	3
		SV	..	.	8-6	4-0	35		60
RDC03	RENAL DIALYSIS CHAIR STATION COMBO	VT	GLG	AT2	2600	1200	30	40	3
		SV	..	.	8-6	4-0	35		60
RDP01	RENAL DIALYSIS PORTABLE STATION	VT	GLG	AT2	2600	1200	30	40	3
		SV	..	.	8-6	4-0	35		60
RDPD1	RENAL DIALYSIS PERITONEAL STATION	VT	GLG	AT2	2600	1200	30	40	3
		SV	..	.	8-6	4-0	35		60
RDSM1	RENAL DIALYSIS SOLUTE MAKEUP BATCH	VT	GLG	AT2	2600	1200	30	40	3
		SV	..	.	8-6	4-0	35		60
RDSM2	RENAL DIALYSIS SOLUTE MAKEUP CENTRL	VT	GLG	AT2	2600	1200	30	40	3
		SV	..	.	8-6	4-0	35		60
RECP1	RECEPTION/CONTROL OUTPATIENT	CP	GVF	AT1	2700	900	35	40	3
		.	GPT	.	9-0	3-0	40		60
RECP2	RECEPTION/CLERICAL CLINIC	CP	GVF	AT1	2700	900	35	40	3
		.	GPT	.	9-0	3-0	40		60
RECP3	RECEPTION/INFORMATION DESK	CP	GVF	AT1	VAR	OPEN	35	40	3
		QT	GPT	.	VAR	OPEN	40		60
RPR01	REPRODUCTION ROOM, STANDARD	CP	GPT	AT1	2400	900	35	50	5
		VT	..	.	8-0	3-0	40		100
RPR02	REPRODUCTION ROOM, HIGH VOLUME	CP	GPT	AT1	2400	900	35	50	7.5
		VT	..	.	8-0	3-0	40		150
RRBD1	RECOVERY ROOM BLOOD DONORS	CP	GVF	AT1	2400	900	30	40	3
		VT	GPT	.	8-0	3-0	35		60

APPENDIX A
ARCHITECTURAL AND ENGINEERING DESIGN REQUIREMENTS

	ELECTRICAL					MEDICAL GASES											HVAC									
						M	D				D	D	L													
ROOM	LIGHT		EM PWR			C	C	L	P	M	H	L	D	O	N	N				TEMP		R	FL		E	
CODE	LEV	N	PWR	LT	N	A	A	A	A	V	V	V	E	X	O	I	N	BL	AC	OA	SM	WN	H	IN	FN	X	N
RDB01	500	C	R	L	.	2	.	.	.	1	.	.	.	1	.	.	B	+	6	2	26	21	.	80	.	.	.
	1100	.			.												.				78	70					.
RDB02	500	C	R	L	.	2	.	.	.	1	.	.	.	1	.	.	B	+	6	2	26	21	.	80	.	.	.
	1100	.			.												.				78	70					.
RDB03	500	C	R	L	.	2	.	.	.	1	.	.	.	1	.	.	B	+	6	2	26	21	.	80	.		
	1100	.			.												.				78	70					
RDC01	500	C	R	L	.	2	.	.	.	1	.	.	.	1	.	.	B	+	6	2	26	21	.	80	.	.	.
	1100	.			.												.				78	70					.
RDC02	500	C	R	L	.	2	.	.	.	1	.	.	.	1	.	.	B	+	6	2	26	21	.	80	.	.	.
	1100	.			.												.				78	70					.
RDC03	500	C	R	L	.	2	.	.	.	1	.	.	.	1	.	.	B	+	6	2	26	21	.	80	.	.	.
	1100	.			.												.				78	70					.
RDP01	500	C	R	L	.	2	.	.	.	1	.	.	.	1	.	.	B	+	6	2	26	21	.	80	.	.	.
	1100	.			.												.				78	70					.
RDPD1	500	C	R	L	.	2	.	.	.	1	.	.	.	1	.	.	B	+	6	2	26	21	.	80	.	.	.
	1100	.			.												.				78	70					.
RDSM1	1100	C	R	L	.	2	.	.	.	1	.	.	.	1	.	.	B	+	6	2	26	21	.	80	.	.	.
	.	.			.												.				78	70					.
RDSM2	1100	C	R	L	.	2	.	.	.	1	.	.	.	1	.	.	B	+	6	2	26	21	.	80	.	.	.
	.	.			.												.				78	70					.
RECP1	300	.	.	.	.	.	.	.	.	.	.	.	.	.	.	.	.	0	4	1	26	21	.	.	.	.	.
	500	.			.												.				78	70					.
RECP2	300	.	.	.	.	.	.	.	.	.	.	.	.	.	.	.	.	0	4	1	26	21	.	.	.	.	.
	500	.			.												.				78	70					.
RECP3	300	.	.	.	.	.	.	.	.	.	.	.	.	.	.	.	.	0	4	1	26	21	.	.	.	.	.
	500	.			.												.				78	70					.
RPR01	500	.	.	.	.	.	.	.	.	.	.	.	.	.	.	.	.	0	10	2	26	21	.	.	.	.	.
	.	.			.												.				78	70					.
RPR02	700	.	.	.	.	.	.	.	.	.	.	.	.	.	.	.	.	0	10	2	26	21	.	.	.	.	.
	.	.			.												.				78	70					.
RRBD1	300	C	.	LS	.	1	.	.	.	3	.	.	.	1	.	.	B	0	4	2	26	21	.	.	.	.	.
	.	.			.												.				78	70					.

APPENDIX A
ARCHITECTURAL AND ENGINEERING DESIGN REQUIREMENTS

STRU ROOM CODE LOAD	ROOM NAME	ARCHITECTURAL MATRL+FIN FL	WAL	CLG	CLG HT	DOOR SIZE	NOISE RM	NOISE SC	FLR
RRIA1	RECOVERY ROOM ISOLATION ANTEROOM	SV	GLG	AT2	2400	1200	30	40	3
		.	..	.	8-0	4-0	35		60
RRIR1	RECOVERY ROOM ISOLATION RECOVERY RM	SV	GLG	AT2	2700	1200	30	40	3
		.	..	.	9-0	4-0	35		60
RRLD1	RECOVERY ROOM LABOR & DELIVERY	SV	GLG	AT2	2700	1200	30	40	3
		.	..	.	9-0	4-0	35		60
RROP1	RECOVERY ROOM OUTPATIENT	SV	GLG	AT2	2700	1200	30	40	3
		.	..	.	9-0	4-0	35		60
RROP2	RECOVERY ROOM OUTPATIENT SEATED REC	SV	GLG	AT2	2700	1200	30	40	3
		.	..	.	9-0	4-0	35		60
RRSS1	RECOVERY ROOM SURG SUITE INPATIENT	SV	GLG	AT2	2700	1200	30	40	3
		.	..	.	9-0	4-0	35		60
RRSS2	RECOVERY ROOM SURG SUITE OUTPATIENT	SV	GLG	AT2	2700	1200	30	40	3
		.	..	.	9-0	4-0	35		60
RRSS3	RECOVERY ROOM OUTPATIENT SEATED SDU	SV	GLG	AT2	2700	1200	30	40	3
		.	..	.	9-0	4-0	35		60
SEC01	SECRETARY, EXECUTIVE OFFICES	CP	GVF	AT1	2400	900	30	40	3
		.	GPT	.	8-0	3-0	35		60
SEC02	SECRETARY, GENERAL USE	CP	GPT	AT1	2400	900	30	40	3
		.	..	.	8-0	3-0	35		60
SHR01	SHOWER AREA	CT	GCT	GLG	VAR	900	35	45	3
		PF	SPF	SPF	VAR	3-0	40		60
SHR02	SHOWER, WHEELCHAIR	CT	GCT	GLG	VAR	900	35	45	3
		PF	SPF	SPF	VAR	3-0	40		60
SL001	STAFF LOUNGE	CP	GVF	AT1	2400	900	35	45	3
		VT	GPT	.	8-0	3-0	40		60
SRCH1	STORAGE RM, CHARGING, BATTERY/EQUIP	CS	GPT	GPT	2400	900	35	40	10
		CT	..	.	8-0	3-0	40		200
SRCS1	STORAGE RM, CRUTCH AND SPLINT	VT	GPT	GPT	2700	900	35	40	6
		.	..	.	9-0	3-0	40		125
SRE01	STORAGE RM, EQUIPMENT	VT	GPT	GPT	2700	E	40	40	6
		.	..	.	9-0		45		125

APPENDIX A
ARCHITECTURAL AND ENGINEERING DESIGN REQUIREMENTS

	ELECTRICAL					MEDICAL GASES											HVAC									
						M	D				D	D	L													
ROOM	LIGHT		EM PWR			C	C	L	P	M	H	L	D	O	N	N				TEMP		R	FL		E	
CODE	LEV	N	PWR	LT	N	A	A	A	A	V	V	V	E	X	O	I	N	BL	AC	OA	SM	WN	H	IN	FN	X	N
RRIA1	300	.	.	.	.	.	.	.	.	.	.	.	.	.	.	.	.	-	6	2	24	.	.	90	.	Y	.
	.	.			.												.				75	.					.
RRIR1	300	B	R	L	.	1	.	.	.	3	.	.	.	1	.	.	B	+	6	2	24	.	Y	90	.	Y	O
	1100	.			.												.				75	.					.
RRLD1	300	B	R	L	.	1	.	.	.	3	.	.	.	1	.	.	B	+	6	2	24	.	Y	90	.	Y	O
	1100	.			.												.				75	.					.
RROP1	300	B	R	L	.	1	.	.	.	3	.	.	.	1	.	.	B	+	6	2	26	21	.	.	.	.	.
	1100	.			.												.				78	70					.
RROP2	300	B	.	LS	.	1	.	.	.	3	.	.	.	1	.	.	B	+	6	2	26	21	.	.	.	.	.
	1100	.			.												.				78	70					.
RRSS1	300	B	R	L	.	1	.	.	.	3	.	.	.	1	.	.	B	+	6	2	24	.	Y	90	95	.	O
	1100	.			.												.				75	.					.
RRSS2	300	B	R	L	.	1	.	.	.	3	.	.	.	1	.	.	B	+	6	2	26	21	Y	.	.	.	O
	1100	.			.												.				78	70					.
RRSS3	300	B	.	LS	.	1	.	.	.	3	.	.	.	1	.	.	B	+	6	2	26	21	.	.	.	.	.
	700	.			.												.				78	70					.
SEC01	500	.	.	.	.	.	.	.	.	.	.	.	.	.	.	.	.	0	4	1	26	20	.	.	.	.	.
	.	.			.												.				78	68					.
SEC02	500	.	.	.	.	.	.	.	.	.	.	.	.	.	.	.	.	0	4	1	26	20	.	.	.	.	.
	.	.			.												.				78	68					.
SHR01	200	.	.	.	.	.	.	.	.	.	.	.	.	.	.	.	.	-	6	1.5	26	24	.	.	.	Y	.
	.	.			.												.				78	75					.
SHR02	300	.	.	.	.	.	.	.	.	.	.	.	.	.	.	.	.	-	6	1.5	26	24	.	.	.	Y	.
	.	.			.												.				78	75					.
SL001	200	.	.	LE	.	.	.	.	.	.	.	.	.	.	.	.	.	0	5	1	26	20	.	.	.	.	.
	.	.			.												.				78	68					.
SRCH1	50	.	.	.	E	.	.	.	.	.	.	.	.	.	.	.	E	-	10	.	29	18	.	.	.	Y	.
	.	.			.												.				85	65					.
SRCS1	100	.	.	.	.	.	.	.	.	.	.	.	.	.	.	.	.	0	4	1	26	20	.	.	.	.	.
	.	.			.												.				78	68					.
SRE01	100	.	.	.	.	.	.	.	.	.	.	.	.	.	.	.	.	0	4	1	26	20	.	.	.	.	.
	.	.			.												.				78	68					.

APPENDIX A
ARCHITECTURAL AND ENGINEERING DESIGN REQUIREMENTS

STRU ROOM CODE LOAD	ROOM NAME	ARCHITECTURAL MATRL+FIN FL	WAL	CLG	CLG HT	DOOR SIZE	NOISE RM	SC	FLR
SRF01	STORAGE RM, FREEZER	PB	SPF	SPF	VAR	SP	.	.	13
		.	..	.	VAR	SP	.		275
SRF02	STORAGE RM, FREEZERS - FREESTANDNG	QT	GLG	GLG	VAR	SP	40	40	B
		.	..	.	VAR	SP	45		B
SRGC1	STORAGE RM, GAS CYLINDERS	CS	BPT	GPT	2700	900	45	40	7.5
		.	GPT	.	9-0	3-0	50		150
SRGC2	STORAGE RM, GAS CYLINDERS (SURG)	SV	GLG	GLG	2400	900	35	40	7.5
		.	..	.	8-0	3-0	40		150
SRHM1	STORAGE RM, HAZARDOUS MATERIALS	CS	BPT	GPT	2700	900	45	40	6
		.	GPT	.	9-0	3-0	50		125
SRL01	STORAGE RM, LAB MICROSCOPE SLIDES	SV	GLG	AT2	2700	900	35	40	6
		.	..	.	9-0	3-0	40		125
SRL02	STORAGE RM, LAB PARAFFIN BLOCKS	SV	GLG	AT2	2700	900	35	40	6
		.	..	.	9-0	3-0	40		125
SRLW1	STORAGE RM/AREA, LITTER-WHEELCHAIR	VT	GPT	AT1	2700	OPEN	35	40	6
		.	..	.	9-0	OPEN	40		125
SRPB1	STORAGE RM, PATIENT BAGGAGE	VT	GPT	AT1	2700	900	35	40	6
		.	..	.	9-0	3-0	40		125
SRPP1	STORAGE RM, PEDIATRICS PLAYROOM	CP	GPT	AT1	2700	900	35	40	6
		VT	..	.	9-0	3-0	40		125
SRPS1	STORAGE RM, PARTS STORAGE	VT	GPT	AT1	2700	900	35	40	6
		CS	..	.	9-0	3-0	40		125
SRR01	STORAGE RM, REFRIGERATED	PB	SPF	SPF	VAR	SP	.	.	13
		.	..	.	VAR	SP	.		275
SRR02	STORAGE RM, REFRIGERATORS FREESTND	QT	GLG	GLG	VAR	SP	.	.	B
		.	..	.	VAR	SP	.		B
SRS01	STORAGE RM, SHELVING	VT	GPT	AT1	2700	900	40	40	7.5
		CS	..	.	9-0	3-0	45		150
SRS02	STORAGE RM, MOBILE SHELVING	VT	GPT	AT1	2700	900	.	.	10
		CS	..	.	9-0	3-0	.		200
SRSE1	STORAGE RM, EQUIPMENT/SHELVING	VT	GPT	AT1	2700	900	.	.	7.5
		CS	..	.	9-0	3-0	.		150

APPENDIX A
ARCHITECTURAL AND ENGINEERING DESIGN REQUIREMENTS

	ELECTRICAL					MEDICAL GASES											HVAC									
						M	D				D	D	L													
ROOM	LIGHT		EM PWR			C	C	L	P	M	H	L	D	O	N	N				TEMP		R	FL		E	
CODE	LEV	N	PWR	LT	N	A	A	A	A	V	V	V	E	X	O	I	N	BL	AC	OA	SM	WN	H	IN	FN	X	N
SRF01	200	.	.	LS	E	.	.	.	.	.	.	.	.	.	.	.	.	0	10	2	SP	SP	.	.	.	Y	.
	.	.			.												.				SP	SP					.
SRF02	200	.	.	LS	E	.	.	.	.	.	.	.	.	.	.	.	.	0	10	2	26	20	.	.	.	Y	.
	.	.			.												.				78	68					.
SRGC1	50	.	.	.	.	.	.	.	.	.	.	.	.	.	.	.	.	-	6	6	.	.	.	.	.	Y	G
	.	.			.												.				.	.					.
SRGC2	200	.	.	LS	.	.	.	.	.	.	.	.	.	.	.	.	.	-	6	6	26	20	.	.	.	Y	G
	.	.			.												.				78	68					.
SRHM1	100	E	.	LS	.	.	.	.	.	.	.	.	.	.	.	.	.	-	6	6	.	.	.	.	.	Y	G
	.	.			.												.				.	.					.
SRL01	100	.	.	.	.	.	.	.	.	.	.	.	.	.	.	.	.	+	4	1	26	21	.	.	.	.	.
	.	.			.												.				78	68					.
SRL02	100	.	.	.	.	.	.	.	.	.	.	.	.	.	.	.	.	+	4	1	26	21	.	.	.	.	.
	.	.			.												.				78	68					.
SRLW1	100	.	.	.	.	.	.	.	.	.	.	.	.	.	.	.	.	+	4	1	26	21	.	.	.	.	.
	.	.			.												.				78	68					.
SRPB1	100	.	.	.	.	.	.	.	.	.	.	.	.	.	.	.	.	0	4	1	26	20	.	.	.	.	.
	.	.			.												.				78	68					.
SRPP1	100	.	.	.	.	.	.	.	.	.	.	.	.	.	.	.	.	0	4	1	26	20	.	.	.	.	.
	.	.			.												.				78	68					.
SRPS1	100	.	.	.	.	.	.	.	.	.	.	.	.	.	.	.	.	0	4	1	26	20	.	.	.	.	.
	.	.			.												.				78	68					.
SRR01	200	.	.	LS	E	.	.	.	.	.	.	.	.	.	.	.	.	0	.	.	.	.	.	.	.	.	.
	.	.			.												.				.	.					.
SRR02	200	.	.	LS	E	.	.	.	.	.	.	.	.	.	.	.	.	0	.	.	.	.	.	.	.	.	.
	.	.			.												.				.	.					.
SRS01	100	.	.	.	.	.	.	.	.	.	.	.	.	.	.	.	.	0	4	1	26	20	.	.	.	.	.
	.	.			.												.				78	68					.
SRS02	100	.	.	.	.	.	.	.	.	.	.	.	.	.	.	.	.	0	4	1	26	20	.	.	.	.	.
	.	.			.												.				78	68					.
SRSE1	100	.	.	.	.	.	.	.	.	.	.	.	.	.	.	.	.	0	4	1	26	20	.	.	.	.	.
	.	.			.												.				78	68					.

STRU ROOM CODE LOAD	ROOM NAME	ARCHITECTURAL MATRL+FIN FL	WAL	CLG	CLG HT	DOOR SIZE	NOISE RM	SC	FLR
SRTE1	STORAGE RM, TRACTION EQUIPMENT	SV	GLG	AT1	2700	1200	.	.	6
		VT	GPT	.	9-0	4-0	.		125
SSC01	SECURE STORAGE, CAGE	VT	GPT	AT1	2700	900	.	.	6
		CS	..	.	9-0	3-0	.		125
SSS01	SECURE STORAGE, SAFE	VT	SSP	SSP	VAR	SP	.	.	C
		CS	..	.	VAR	SP	.		C
SSV01	SECURE STORAGE, VAULT	VT	CCS	CCS	VAR	900	.	.	6
		CS	BPT	BPT	VAR	3-0	.		125
TCGS1	TREATMENT CUBICLE GENERAL SURGICAL	SV	GLG	AT2	2700	900	30	40	3
		.	..	.	9-0	3-0	35		60
TLTD1	TOILET/SHOWER, DUTY ROOM	CT	GCT	GLG	2400	900	35	40	3
		SV	SPF	SPF	8-0	3-0	40		60
TLTF0	TOILET/SHOWER, HANDICAP ACCESSIBLE	SV	GCT	GLG	2400	900	35	40	3
		CT	SPF	SPF	8-0	3-0	40		60
TLTF1	TOILET, FEMALE, HANDICAPPED	SV	GLG	GLG	2400	900	35	40	3
		CT	..	.	8-0	3-0	40		60
TLTF2	TOILET FEMALE WITH CHANGING COUNTER	CT	GLG	GLG	2400	900	35	40	3
		SV	..	.	8-0	3-0	40		60
TLTF3	TOILET/SHOWER FEMALE	CT	GCT	GLG	2400	900	35	40	3
		SV	GLG	.	8-0	3-0	40		60
TLTF4	TOILET/TUB/SHOWER-PEDIATRICS	CT	GCT	GLG	2400	SP	35	40	3
		SV	GLG	.	8-0	SP	40		60
TLTF5	TOILET/SHOWER FEMALE OBSTETRICS	CT	GCT	GLG	2400	900	35	40	3
		SV	GLG	.	8-0	3-0	40		60
TLTF6	TOILET FEMALE OBSTETRICS WARD	SV	GLG	GLG	2400	900	35	40	3
		CT	..	.	8-0	3-0	40		60
TLTM1	TOILET, MALE, HANDICAPPED	SV	GLG	GLG	2400	900	35	40	3
		CT	..	.	8-0	3-0	40		60
TLTM2	TOILET MALE WITH CHANGING COUNTER	SV	GLG	GLG	2400	900	35	40	3
		CT	..	.	8-0	3-0	40		60
TLTM3	TOILET/SHOWER MALE	CT	GCT	GLG	2400	900	35	40	3
		SV	GLG	.	8-0	3-0	40		60

APPENDIX A
ARCHITECTURAL AND ENGINEERING DESIGN REQUIREMENTS

	ELECTRICAL					MEDICAL GASES											HVAC									
						M	D				D	D	L													
ROOM	LIGHT		EM PWR			C	C	L	P	M	H	L	D	O	N	N				TEMP		R	FL		E	
CODE	LEV	N	PWR	LT	N	A	A	A	A	V	V	V	E	X	O	I	N	BL	AC	OA	SM	WN	H	IN	FN	X	N
SRTE1	100	.	.	.	.	.	.	.	.	.	.	.	.	.	.	.	.	0	4	1	26	20	.	.	.	.	.
	.	.			.												.				78	68					.
SSC01	100	.	.	.	.	.	.	.	.	.	.	.	.	.	.	.	.	0	4	1	26	20	.	.	.	.	.
	.	.			.												.				78	68					.
SSS01	100	.	.	.	.	.	.	.	.	.	.	.	.	.	.	.	.	0	.	.	.	.	.	.	.	.	.
	.	.			.												.				.	.					.
SSV01	100	.	.	.	.	.	.	.	.	.	.	.	.	.	.	.	.	0	6	1	26	21	.	.	.	.	.
	.	.			.												.				78	68					.
TCGS1	500	D	.	.	.	1	.	.	.	1	.	.	.	1	.	.	.	+	12	3	20	24	.	80	.	.	.
	1100	.			.												.				68	75					.
TLTD1	200	.	.	.	.	.	.	.	.	.	.	.	.	.	.	.	.	.	.	.	.	.	.	.	.	.	.
	.	.			.												.				.	.					.
TLTF0	200	.	.	.	.	.	.	.	.	.	.	.	.	.	.	.	.	EX	10	.	.	.	.	.	.	Y	.
	.	.			.												.				.	.					.
TLTF1	200	.	.	.	.	.	.	.	.	.	.	.	.	.	.	.	.	EX	10	.	.	.	.	.	.	Y	.
	.	.			.												.				.	.					.
TLTF2	300	.	.	.	.	.	.	.	.	.	.	.	.	.	.	.	.	EX	10	.	.	.	.	.	.	Y	.
	.	.			.												.				.	.					.
TLTF3	200	.	.	.	.	.	.	.	.	.	.	.	.	.	.	.	.	EX	10	.	.	.	.	.	.	Y	.
	.	.			.												.				.	.					.
TLTF4	200	.	.	.	.	.	.	.	.	.	.	.	.	.	.	.	.	EX	10	.	.	.	.	.	.	Y	.
	.	.			.												.				.	.					.
TLTF5	200	.	.	.	.	.	.	.	.	.	.	.	.	.	.	.	.	EX	10	.	.	.	.	.	.	Y	.
	.	.			.												.				.	.					.
TLTF6	200	.	.	.	.	.	.	.	.	.	.	.	.	.	.	.	.	EX	10	.	.	.	.	.	.	Y	.
	.	.			.												.				.	.					.
TLTM1	200	.	.	.	.	.	.	.	.	.	.	.	.	.	.	.	.	EX	10	.	.	.	.	.	.	Y	.
	.	.			.												.				.	.					.
TLTM2	300	.	.	.	.	.	.	.	.	.	.	.	.	.	.	.	.	EX	10	.	.	.	.	.	.	Y	.
	.	.			.												.				.	.					.
TLTM3	200	.	.	.	.	.	.	.	.	.	.	.	.	.	.	.	.	EX	10	.	.	.	.	.	.	Y	.
	.	.			.												.				.	.					.

APPENDIX A
ARCHITECTURAL AND ENGINEERING DESIGN REQUIREMENTS

STRU ROOM CODE LOAD	ROOM NAME	ARCHITECTURAL MATRL+FIN FL	WAL	CLG	CLG HT	DOOR SIZE	NOISE RM	SC	FLR
TLTP1	TOILET PSYCHIATRIC	SV	GLG	GLG	2400	1050	35	40	3
		CT	..	.	8-0	3-6	40		60
TLTP3	TOILET/SHOWER PSYCHIATRIC	CT	GCT	GLG	2400	1050	35	40	3
		SV	GLG	.	8-0	3-6	40		60
TLTS1	TOILET SPECIMEN HANDICAPPED	SV	GLG	GLG	2400	900	35	40	3
		CT	..	.	8-0	3-0	40		60
TRBM1	TX BONE MARROW	SV	GLG	GLG	2700	1050	30	40	3
		.	..	.	3-6	3-6	35		60
TREE1	TX ROOM ENDOSCOPIC EXAM (UGI)	SV	GLG	GLG	2700	D	30	40	3
		.	..	.	9-0		35		60
TREN1	TX ENT	SV	GLG	GLG	2700	900	25	40	3
		.	..	.	9-0	3-0	30		60
TRET1	TX EMERGENCY TRAUMA ROOM 2 BED	CT	GCT	GLG	2700	H	35	50	3
		SV	GLG	.	9-0		40		60
TRET2	TX EMERGENCY TRAUMA WITH XRAY	CT	GCT	GLG	2700	H	35	50	3
		SV	GLG	.	9-0		40		60
TREY1	TX EYE - OPHTHALMOLOGY	SV	GLG	GLG	2700	900	30	40	3
		.	..	.	9-0	3-0	35		60
TRGM1	TX ROOM GENERAL MEDICAL	SV	GLG	GLG	2700	900	30	40	3
		.	..	.	9-0	3-0	35		60
TRGS1	TX ROOM GENERAL SURGICAL	SV	GLG	GLG	2700	900	30	40	3
		.	..	.	9-0	3-0	35		60
TRIF1	TX INFANT FEVER RAPID REDUCTION	SV	GLG	GLG	2700	900	30	50	3
		.	..	.	9-0	3-0	35		60
TRNP1	TX PSYCHIATRIC	CP	GPT	AT1	2700	1050	30	40	3
		VT	..	.	9-0	3-6	35		60
TROB1	TX OB/GYN	SV	GLG	GLG	2700	900	30	40	3
		VT	..	.	9-0	3-0	35		60
TROR1	TX ORTHOPEDIC	SV	GLG	GLG	2700	900	30	40	3
		VT	..	.	9-0	3-0	35		60
TRPE1	TX ROOM PROCTOSCOPIC EXAM (LGI)	SV	GLG	GLG	2700	900	30	40	3
		VT	..	.	9-0	3-0	35		60

APPENDIX A
ARCHITECTURAL AND ENGINEERING DESIGN REQUIREMENTS

	ELECTRICAL					MEDICAL GASES											HVAC								
						M	D				D	D	L												
ROOM	LIGHT		EM PWR			C	C	L	P	M	H	L	D	O	N	N				TEMP		R	FL		E	
CODE	LEV	N	PWR	LT	N	A	A	A	A	V	V	V	E	X	O	I	N	BL	AC	OA	SM	WN	H	IN	FN	X	N
TLTP1	200	.	.	.	.	.	.	.	.	.	.	.	.	.	.	.	.	EX	10	.	.	.	.	.	.	Y	.
	.	.			.												.				.	.					.
TLTP3	200	.	.	.	.	.	.	.	.	.	.	.	.	.	.	.	.	EX	10	.	.	.	.	.	.	Y	.
	.	.			.												.				.	.					.
TLTS1	200	.	.	.	.	.	.	.	.	.	.	.	.	.	.	.	.	EX	10	.	.	.	.	.	.	Y	.
	.	.			.												.				.	.					.
TRBM1	500	D	.	LB	E	.	.	.	.	.	.	.	.	.	.	.	.	.	.	.	.	.	.	.	.	.	.
	1100	.			.												.				.	.					.
TREE1	500	D	.	.	.	1	.	.	.	2	.	.	.	1	.	.	.	0	8	2	26	20	.	.	.	.	.
	1100	.			.												.				78	68					.
TREN1	500	D	.	.	.	.	.	.	.	1	.	.	.	1	.	.	.	0	4	2	26	20	.	.	.	.	.
	1100	.			.												.				78	68					.
TRET1	1100	D	R	L	.	2	.	.	.	3	.	.	.	2	.	.	B	+	12	5	24	24	.	80	.	.	.
	.	.			.												.				75	75					.
TRET2	1100	D	R	L	.	2	.	.	.	3	.	.	.	2	.	.	B	+	12	5	24	24	.	80	.	.	.
	.	.			.												.				75	75					.
TREY1	500	D	.	.	.	1	.	.	.	1	.	.	.	1	.	.	.	0	6	2	26	20	.	.	.	.	.
	1100	.			.												.				78	68					.
TRGM1	500	D	.	.	.	.	.	.	.	1	.	.	.	1	.	.	.	0	6	2	26	20	.	.	.	.	.
	1100	.			.												.				78	68					.
TRGS1	500	D	.	.	.	.	.	.	.	1	.	.	.	1	.	.	.	0	6	2	26	20	.	.	.	.	.
	1100	.			.												.				78	68					.
TRIF1	500	D	.	.	.	1	.	1	.	1	.	.	.	1	.	.	B	0	6	2	26	20	.	.	.	.	.
	1100	.			.												.				78	68					.
TRNP1	500	C	.	.	.	.	.	.	.	.	.	.	.	.	.	.	.	0	6	2	26	20	.	.	.	.	.
	.	.			.												.				78	68					.
TROB1	500	D	.	.	.	.	.	.	.	1	.	.	.	1	.	.	.	0	6	2	26	20	.	.	.	.	.
	1100	.			.												.				78	68					.
TROR1	500	D	.	.	.	1	.	.	.	1	.	.	.	1	.	.	.	0	6	2	26	20	.	.	.	.	.
	1100	.			.												.				78	68					.
TRPE1	500	D	.	.	.	1	.	.	.	2	.	.	.	1	.	.	.	+	6	2	26	20	.	.	.	.	.
	1100	.			.												.				78	68					.

APPENDIX A
ARCHITECTURAL AND ENGINEERING DESIGN REQUIREMENTS

STRU ROOM CODE LOAD	ROOM NAME	ARCHITECTURAL MATRL+FIN FL	WAL	CLG	CLG HT	DOOR SIZE	NOISE RM	NOISE SC	FLR
TRPE2	TX PULMONARY ENDOSCOPY	SV	GLG	GLG	2700	900	30	40	3
		VT	..	.	9-0	3-0	35		60
TRWD1	TX ROOM WARD MEDICAL/SURG	SV	GLG	GLG	2700	900	30	40	3
		.	..	.	9-0	3-0	35		60
TUB01	TUB ROOM WARD	CT	GCT	GLG	2400	900	35	40	C
		SV	GLG	.	8-0	3-0	40		C
TUB02	TUB ROOM PEDIATRICS	CT	GCT	GLG	2400	900	35	40	C
		SV	GLG	.	8-0	3-0	40		C
UCCL1	UTILITY CLEAN CLINICS	VT	GPT	AT1	2400	900	35	40	5
		.	..	.	8-0	3-0	40		100
UCWD1	UTILITY CLEAN WARD	VT	GLG	AT1	2400	900	35	40	5
		.	..	.	8-0	3-0	40		100
USCL1	UTILITY SOILED CLINICS	VT	GLG	AT1	2400	900	35	40	5
		SV	..	.	8-0	3-0	40		100
USPS1	MAIL ROOM, U.S. POST OFF	VT	GPT	AT1	2700	900	35	50	6
		.	..	.	9-0	3-0	40		125
USWD1	UTILITY SOILED WARD	VT	GLG	AT1	2400	900	35	40	5
		SV	..	.	8-0	3-0	40		100
UTC01	UTILITY TRASH COLLECTION	CS	GLG	GLG	2400	900	35	40	6
		VT	BPT	.	8-0	3-0	40		125
UTC02	UTILITY TRASH HOLDING AND DECON	CS	CCS	GLG	3000	900	.	40	B
		.	BPT	.	10-0	3-0	.		B
UTLC1	UTILITY TRASH AND LINEN COLLECTION	VT	GLG	GLG	2400	900	.	40	C
		CS	BPT	.	8-0	3-0	.		.
VCU01	VETERINARY CLEAN UTILITY	ER	BEP	GEP	2700	1200	.	40	C
		.	..	.	9-0	4-0	.		.
VCWA1	VETERINARY CAGE WASH AREA	ER	BEP	GEP	2700	1200	35	50	C
		.	..	.	9-0	4-0	40		.
VEX01	VETERINARY EXAMINATION/TX ROOM	AR	BEP	GEP	2700	VET	35	50	C
		.	..	.	9-0		40		.
VFIL1	VETERINARY FOOD INSPECTION LAB	AR	BEP	GEP	2700	1200	35	50	C
		.	..	.	9-0	4-0	40		.

APPENDIX A
ARCHITECTURAL AND ENGINEERING DESIGN REQUIREMENTS

	ELECTRICAL					MEDICAL GASES											HVAC									
						M	D				D	D	L													
ROOM	LIGHT		EM PWR			C	C	L	P	M	H	L	D	O	N	N				TEMP		R	FL		E	
CODE	LEV	N	PWR	LT	N	A	A	A	A	V	V	V	E	X	O	I	N	BL	AC	OA	SM	WN	H	IN	FN	X	N
TRPE2	500	D	.	.	.	1	.	.	.	2	.	.	.	1	.	.	.	-	12	2	26	20	.	.	.	Y	.
	1100	.			.												.				78	68					.
TRWD1	500	D	.	.	.	1	.	.	.	1	.	.	.	1	.	.	.	0	6	2	26	21	.	80	.	.	.
	1100	.			.												.				78	70					.
TUB01	200	.	.	.	.	.	.	.	.	.	.	.	.	.	.	.	.	-	6	2	26	24	.	80	.	Y	.
	.	.			.												.				78	75					.
TUB02	200	.	.	.	.	.	.	.	.	.	.	.	.	.	.	.	.	-	6	2	26	24	.	80	.	Y	.
	.	.			.												.				78	75					.
UCCL1	200	.	.	.	.	.	.	.	.	.	.	.	.	.	.	.	.	+	4	1	26	20	.	.	.	.	.
	.	.			.												.				78	68					.
UCWD1	200	.	.	.	.	.	.	.	.	.	.	.	.	.	.	.	.	+	4	1	26	21	.	80	.	.	.
	.	.			.												.				78	70					.
USCL1	200	.	.	.	.	.	.	.	.	.	.	.	.	.	.	.	.	-	6	1	26	20	.	.	.	Y	.
	.	.			.												.				78	68					.
USPS1	500	F	.	.	.	.	.	.	.	.	.	.	.	.	.	.	.	0	4	1	26	20	.	.	.	.	.
	1100	.			.												.				78	68					.
USWD1	200	.	.	.	.	.	.	.	.	.	.	.	.	.	.	.	.	-	10	1	26	21	.	80	.	Y	.
	.	.			.												.				78	70					.
UTC01	200	.	.	.	.	.	.	.	.	.	.	.	.	.	.	.	.	-	10	1	26	20	.	.	.	Y	.
	.	.			.												.				78	68					.
UTC02	50	.	.	.	.	.	.	.	1	.	.	.	.	.	.	.	.	.	.	.	.	.	.	.	.	.	.
	.	.			.												.				.	.					.
UTLC1	200	.	.	LS	.	.	.	.	.	.	.	.	.	.	.	.	.	-	10	1	26	20	.	.	.	Y	.
	.	.			.												.				78	68					.
VCU01	200	.	.	LE	.	.	.	.	.	.	.	.	.	.	.	.	.	+	6	1	26	20	.	80	.	.	.
	.	.			.												.				78	68					.
VCWA1	200	.	.	LE	.	.	.	.	.	.	.	.	.	.	.	.	.	-	10	1	26	20	.	.	.	Y	.
	.	.			.												.				78	68					.
VEX01	500	D	R	LB	.	1	.	.	.	1	.	.	.	.	.	1	.	0	4	2	26	20	.	.	.	Y	.
	1100	.			.												.				78	68					.
VFIL1	500	C	.	LS	.	.	.	.	.	.	.	.	.	.	.	.	.	-	6	2	26	20	.	80	.	Y	M
	1100	.			.												.				78	68					.

APPENDIX A
ARCHITECTURAL AND ENGINEERING DESIGN REQUIREMENTS

STRU ROOM CODE LOAD	ROOM NAME	ARCHITECTURAL MATRL+FIN FL	WAL	CLG	CLG HT	DOOR SIZE	NOISE RM	NOISE SC	FLR
VFP01	VETERINARY FOOD PREP ROOM	AR	BEP	GEP	2700	1200	35	50	C
		.	..	.	9-0	4-0	40		.
VHAU1	VETERINARY HOLDING AREA UTILITY/STR	AR	BEP	GEP	2700	1200	35	50	C
		.	..	.	9-0	4-0	40		.
VKEN1	VETERINARY KENNEL AREA IN/OUTSIDE	ER	BEP	GEP	2700	1200	35	50	C
		.	..	.	9-0	4-0	40		.
VKEN2	VETERINARY KENNEL AREA CONFINE ONLY	ER	BEP	GEP	2700	1200	35	50	C
		.	..	.	9-0	4-0	40		.
VLAH1	VETERINARY LARGE ANIMAL HOLDING AR	ER	BEP	GEP	2700	VET	35	50	C
		.	..	.	9-0		40		.
VLB01	VETERINARY LABORATORY	AR	BEP	GEP	2700	1200	35	40	C
		.	..	.	9-0	4-0	40		.
VLBV1	VETERINARY LABORATORY VIROLOGY	ER	BEP	GEP	2700	1200	35	40	C
		.	..	.	9-0	4-0	40		.
VPH01	VETERINARY PHARMACY	ER	BEP	GEP	2700	1200	35	40	C
		.	..	.	9-0	4-0	40		.
VRHA1	VETERINARY RODENT HOLDING AREA	ER	BEP	GEP	2700	VET	35	40	C
		.	..	.	9-0		40		
VRQA1	VETERINARY RABIES QUARANTINE AREA	ER	BEP	GEP	2700	VET	35	40	C
		.	..	.	9-0		40		
VRRP1	VETERINARY RECOVERY ROOM/PREP AREA	ER	BEP	GEP	2700	1200	35	40	C
		.	..	.	9-0	4-0	40		
VRUN1	VETERINARY ANIMAL RUN	ER	BEP	GEP	2700	1200	35	40	C
		.	..	.	9-0	4-0	40		
VS001	VETERINARY SURGERY ROOM	ER	BEP	GEP	2700	1200	35	40	C
		.	..	.	9-0	4-0	40		
VXER1	VETERINARY XRAY EXPOSURE ROOM	ER	BEL	GEP	2900	1200	35	40	C
		.	..	.	9-6	4-0	40		
WBG01	WELDING BOOTH GENERAL USE	CS	CCS	GLG	2700	900	60	50	5
		.	BPT	.	9-0	3-0	60		100
WRC01	WAITING ROOM, CHAIRS ONLY	CP	GVF	AT1	2700	900	35	40	3
		.	GPT	.	9-0	3-0	40		60

APPENDIX A
ARCHITECTURAL AND ENGINEERING DESIGN REQUIREMENTS

	ELECTRICAL					MEDICAL GASES											HVAC									
						M	D				D	D	L													
ROOM	LIGHT		EM PWR			C	C	L	P	M	H	L	D	O	N	N				TEMP		R	FL		E	
CODE	LEV	N	PWR	LT	N	A	A	A	A	V	V	V	E	X	O	I	N	BL	AC	OA	SM	WN	H	IN	FN	X	N
VFP01	500	.	.	LS	.	.	.	.	.	.	.	.	.	.	.	.	.	+	6	2	26	20	.	80	.	Y	.
	.	.			.												.				78	68					.
VHAU1	150	.	.	LE	.	.	.	.	.	.	.	.	.	.	.	.	.	-	6	2	26	20	.	.	.	Y	.
	.	.			.												.				78	68					.
VKEN1	100	.	.	LS	.	.	.	.	.	.	.	.	.	.	.	.	.	-	10	10	26	20	.	.	.	Y	.
	300	.			.												.				78	68					.
VKEN2	100	.	.	LS	.	.	.	.	.	.	.	.	.	.	.	.	.	-	10	2	26	20	.	.	.	Y	.
	300	.			.												.				78	68					.
VLAH1	100	.	.	LS	.	.	.	.	.	.	.	.	.	.	.	.	.	-	10	10	64	79	.	.	.	Y	.
	300	.			.												.				18	26					.
VLB01	500	C	.	LB	.	1	.	1	.	1	.	.	.	1	.	.	B	-	6	2	26	20	.	.	.	.	M
	1100	.			.												.				78	68					
VLBV1	500	C	.	LB	.	1	.	1	.	1	.	.	.	1	.	.	B	-	6	2	26	20	.	.	.	.	M
	1100	.			.												.				78	68					
VPH01	1100	F	.	LE	.	.	.	.	.	.	.	.	.	.	.	.	.	+	4	2	26	20	.	.	.	.	.
	.	.			.												.				78	68					
VRHA1	100	.	R	LS	.	.	.	.	.	.	.	.	.	.	.	.	.	-	15	15	64	79	.	80	.	Y	.
	300	.			.												.				18	26					.
VRQA1	100	.	R	LB	.	.	.	.	.	.	.	.	.	.	.	.	.	-	10	2	26	20	.	80	.	Y	.
	300	.			.												.				78	68					.
VRRP1	500	.	RA	LB	.	1	.	.	.	1	.	.	.	1	.	.	.	+	6	2	64	79	.	80	.	Y	.
	.	.			.												.				18	26					.
VRUN1	100	.	.	LE	.	.	.	.	.	.	.	.	.	.	.	.	.	0	6	2	26	20	.	.	.	Y	.
	.	.			.												.				78	68					.
VS001	1100	D	RA	LB	.	1	.	.	.	2	.	.	.	1	.	.	.	+	15	5	18	26	Y	60	90	Y	.
	.	.			.												.				64	79					.
VXER1	500	I	.	.	4	.	.	.	.	.	.	.	.	.	.	.	.	0	4	2	26	20	.	80	.	Y	.
	.	.			.												.				78	68					.
WBG01	700	.	.	.	.	.	.	.	.	.	.	.	.	.	.	.	.	.	.	.	.	.	.	.	.	.	.
	.	.			.												.				.	.					.
WRC01	300	.	.	LE	.	.	.	.	.	.	.	.	.	.	.	.	.	0	6	1	26	20	.	.	.	.	.
	.	.			.												.				78	68					.

APPENDIX A
ARCHITECTURAL AND ENGINEERING DESIGN REQUIREMENTS

STRU ROOM CODE LOAD	ROOM NAME	ARCHITECTURAL MATRL+FIN FL	WAL	CLG	CLG HT	DOOR SIZE	NOISE RM	NOISE SC	FLR
WRC02	WAITING ROOM, COMPLETE	CP	GVF	AT1	2700	900	35	40	3
		.	GPT	.	9-0	3-0	40		60
WRCA1	WAITING ROOM, CLOTHING ALCOVE	CP	GVF	AT1	2700	900	35	40	3
		.	GPT	.	9-0	3-0	40		60
WRCH1	WORKROOM, CHARTING AREA	CP	GPT	AT1	2400	900	30	40	3
		VT	..	.	8-0	3-0	35		60
WRCL1	WAITING ROOM, LITTER & CHAIR	CP	GVF	AT1	2700	900	35	40	3
		VT	GPT	.	9-0	3-0	40		60
WRF01	WAITING ROOM, FAMILY	CP	GVF	AT1	2700	900	35	40	3
		.	GPT	.	9-0	3-0	40		60
WRFW1	WAITING ROOM, FORMS WRITING AREA	CP	GVF	AT1	2700	900	35	40	3
		.	GPT	.	9-0	3-0	40		60
WRPC1	WAITING ROOM, PULMONARY CLINIC	CP	GVF	AT1	2700	900	35	40	3
		.	GPT	.	9-0	3-0	40		60
WRL01	WAITING ROOM, LITTER ONLY	VT	GPT	AT1	2700	900	30	40	3
		.	..	.	9-0	3-0	40		60
WREM1	WAITING ROOM, EMERGENCY	VT	GPT	AT1	2700	900	30	40	3
		.	.	.	9-0	3-0	40		60
XABP1	XRAY ANGIO BIPLANE DIGITAL UNIT	SV	GLG	AT1	3000	1200	35	40	5
		VT	GPT	GPT	10-0	4-0	40		100
XACR1	XRAY ANGIOGRAPHIC CONTROL ROOM	SV	GLG	AT1	2400	900	35	40	5
		VT	GPT	GPT	8-0	3-0	40		100
XACV1	XRAY ANGIO COMPUTER & VIEWING ROOM	SV	GLG	AT1	2400	900	35	40	5
		VT	GPT	.	8-0	3-0	40		100
XAIR1	XRAY ANGIO INSTRUMENT ROOM	SV	GLG	AT1	2400	900	35	40	5
		VT	GPT	.	8-0	3-0	40		100
XAPP1	XRAY PATIENT PREP ROOM, SPEC PROC	SV	GLG	AT1	2400	900	35	40	3
		VT	GPT	.	8-0	3-0	40		60
XASP1	XRAY ANGIOGRAPHIC SINGLE PLANE	SV	GLG	AT1	3000	1200	35	40	5
		VT	GPT	GPT	10-0	4-0	40		100
XCCA1	XRAY CARDIAC CATH ADP EQUIPMENT RM	SV	GLG	AT1	2400	900	35	40	5
		VT	GPT	.	8-0	3-0	40		100

APPENDIX A
ARCHITECTURAL AND ENGINEERING DESIGN REQUIREMENTS

	ELECTRICAL					MEDICAL GASES											HVAC									
						M	D				D	D	L													
ROOM	LIGHT		EM PWR			C	C	L	P	M	H	L	D	O	N	N				TEMP		R	FL		E	
CODE	LEV	N	PWR	LT	N	A	A	A	A	V	V	V	E	X	O	I	N	BL	AC	OA	SM	WN	H	IN	FN	X	N
WRC02	300	.	.	LE	.	.	.	.	.	.	.	.	.	.	.	.	.	0	6	1	26	20	.	.	.	.	.
	.	.			.												.				78	68					.
WRCA1	150	.	.	LE	.	.	.	.	.	.	.	.	.	.	.	.	.	0	4	1	26	20	.	.	.	.	.
	.	.			.												.				78	68					.
WRCH1	500	.	.	L	.	.	.	.	.	.	.	.	.	.	.	.	.	0	4	1	26	21	.	.	.	.	.
	.	.			.												.				78	70					.
WRCL1	300	.	.	LE	.	.	.	.	.	.	.	.	.	.	.	.	.	0	6	1	26	21	.	.	.	.	.
	.	.			.												.				78	70					.
WRF01	300	.	.	LE	.	.	.	.	.	.	.	.	.	.	.	.	.	0	6	1	26	20	.	.	.	.	.
	.	.			.												.				78	68					.
WRFW1	300	.	.	LE	.	.	.	.	.	.	.	.	.	.	.	.	.	0	6	1	26	20	.	.	.	.	.
	.	.			.												.				78	68					.
WRPC1	300	.	.	LE	.	.	.	.	.	.	.	.	.	.	.	.	.	-	15	2	26	21	.	.	.	Y	.
	.	.			.												.				78	70					.
WRL01	100	.	.	.	.	.	.	.	.	.	.	.	.	.	.	.	.	0	4	1	26	21	.	.	.	.	.
	.	.			.												.				78	70					.
WREM1	300	.	.	LE	.	.	.	.	.	.	.	.	.	.	.	.	.	-	15	2	26	21	.	.	.	Y	.
	.	.			.												.				78	70					.
XABP1	500	D	.	.	U	1	.	.	.	2	.	.	.	1	.	.	.	0	6	2	26	21	.	.	.	.	.
	.	I			.												.				78	70					.
XACR1	300	.	.	.	U	.	.	.	.	.	.	.	.	.	.	.	.	0	6	2	26	21	.	.	.	.	.
	.	.			.												.				78	70					.
XACV1	300	A	.	.	U	.	.	.	.	.	.	.	.	.	.	.	.	0	6	2	26	21	.	.	.	.	N
	.	.			.												.				78	70					.
XAIR1	300	.	.	.	U	.	.	.	.	.	.	.	.	.	.	.	.	0	6	2	26	21	.	.	.	.	.
	.	.			.												.				78	70					.
XAPP1	500	.	.	.	U	1	.	.	.	2	.	.	.	1	.	.	.	0	6	2	26	21	.	.	.	.	.
	1100	.			.												.				78	70					.
XASP1	500	D	.	.	U	1	.	.	.	2	.	.	.	1	.	.	.	0	6	2	26	21	.	.	.	.	.
	.	I			.												.				78	70					.
XCCA1	500	.	RA	LB	.	.	.	.	.	.	.	.	.	.	.	.	.	+	15	5	20	24	.	90	95	.	C
	.	.			.												.				68	75					N

STRU ROOM CODE LOAD	ROOM NAME	ARCHITECTURAL MATRL+FIN FL	WAL	CLG	CLG HT	DOOR SIZE	NOISE RM	SC	FLR
XCCC1	XRAY CARDIAC CATH CONTROL ROOM	SV	GLG	AT1	2400	900	35	40	5
		VT	GPT	.	8-0	3-0	40		100
XCCE1	XRAY CARDIAC CATH EXPOSURE ROOM	SV	GLG	AT1	3000	1200	35	40	5
		VT	GPT	GPT	10-0	4-0	40		100
XCCE2	XRAY CARDIAC CATH EXPOS. RM BIPLANE	SV	GLG	AT1	3000	1200	35	40	5
		VT	GPT	GPT	10-0	4-0	40		100
XCCI1	XRAY CARDIAC CATH INST. ROOM	SV	GLG	AT1	2400	900	35	40	5
		VT	GPT	.	8-0	3-0	40		100
XCCP1	XRAY CARDIAC CATH PREP	SV	GLG	AT1	2400	1200	35	40	3
		VT	GPT	.	8-0	4-0	40		60
XCTC1	XRAY COMPUTED TOMO CONTROL AREA	SV	GLG	AT1	2400	1200	35	40	5
		VT	GPT	.	8-0	4-0	40		100
XCTC2	XRAY COMPUTED TOMO COMPUTER ROOM	SV	GLG	AT1	2400	1200	35	40	5
		VT	GPT	.	8-0	4-0	40		100
XCTI1	XRAY COMPUTED TOMO INDEP VIEW CONSO	SV	GLG	AT1	2400	1200	35	40	5
		VT	GPT	.	8-0	4-0	40		100
XCTP1	XRAY COMPUTED TOMO PATIENT PREP RM	SV	GLG	AT1	2400	1200	35	40	3
		VT	GPT	.	8-0	4-0	40		60
XCTS1	XRAY COMPUTED TOMOGRAPHY SCANNER	SV	GLG	AT1	3000	1200	35	40	5
		VT	GPT	GPT	10-0	4-0	40		100
XDCM1	XRAY DIAG CHEST/MAMMO ROOM	SV	GLG	AT1	3000	1200	35	40	5
		VT	GPT	GPT	10-0	4-0	40		100
XDCS1	XRAY DIAG CHESTSTAND MANUAL	SV	GLG	AT1	3000	1200	35	40	5
		VT	GPT	GPT	10-0	4-0	40		100
XDCS2	XRAY DIAG CHESTSTAND AUTOMATIC	SV	GLG	AT1	3000	1200	35	40	5
		VT	GPT	GPT	10-0	4-0	40		100
XDCY1	XRAY DIAG CYSTO RAD ONLY 600 MA	SV	GLG	AT1	3000	1200	35	40	5
		VT	GPT	GPT	10-0	4-0	40		100
XDCY2	XRAY DIAG CYSTO WITH FLUORO 800 MA	SV	GLG	AT1	3000	1200	35	40	5
		VT	GPT	GPT	10-0	4-0	40		100
XDF01	XRAY DIAG FLUOROSCOPIC ONLY (GI)	SV	GLG	AT1	3000	1200	35	40	5
		VT	GPT	GPT	10-0	4-0	40		100

APPENDIX A
ARCHITECTURAL AND ENGINEERING DESIGN REQUIREMENTS

	ELECTRICAL					MEDICAL GASES											HVAC								
						M	D				D	D	L												
ROOM	LIGHT		EM PWR			C	C	L	P	M	H	L	D	O	N	N				TEMP		R	FL		E
CODE	LEV	N	PWR	LT	N	A	A	A	A	V	V	V	E	X	O	I	N	BL	AC	OA	SM	WN	H	IN	FN	X	N
XCCC1	300	A	R	L		.	.	.	.	.	.	.	.	.	.	.	.	+	15	.	20	24	.	.	.	.	C
	.	.				.											.				68	75					.
XCCE1	300	A	R	L		.	1	.	.	.	2	.	.	.	1	1	.	D	-	10	2	24	20	.	.	.	Y	.
	.	.				.											.				75	68					.
XCCE2	300	A	R	L		.	1	.	.	.	2	.	.	.	1	1	.	D	-	10	2	24	20	.	.	.	Y	.
	.	.				.											.				75	68					.
XCCI1	300	.	.	LS		.	.	.	.	.	.	.	.	.	.	.	.	+	15	5	20	24	.	90	95	.	C
	.	.				.											.				68	75					.
XCCP1	500	B	.	L		.	1	.	.	.	2	.	.	.	1	1	.	D	0	6	2	24	.	.	90	95	.	.
	1100	.				.											.				75	.					.
XCTC1	300	A	.	.	U	.	.	.	.	.	.	.	.	.	.	.	.	0	6	2	26	21	.	.	.	.	.
	.	.				.											.				78	70					.
XCTC2	300	.	.	.	U	.	.	.	.	.	.	.	.	.	.	.	.	0	4	2	26	21	.	.	.	.	N
	.	.				.											.				78	70					.
XCTI1	300	A	.	.	U	.	.	.	.	.	.	.	.	.	.	.	.	0	4	2	26	21	.	.	.	.	N
	.	.				.											.				78	70					.
XCTP1	500	B	.	.	U	.	.	.	.	1	.	.	.	1	.	.	.	0	4	2	26	21	.	.	.	.	.
	1100	.				.											.				78	70					.
XCTS1	500	D	.	.	U	.	.	.	.	1	.	.	.	1	.	.	.	0	4	2	26	21	.	.	.	.	.
	.	I				.											.				78	70					.
XDCM1	500	D	.	.	U	.	.	.	.	1	.	.	.	1	.	.	.	0	4	2	26	21	.	.	.	.	.
	.	I				.											.				78	70					.
XDCS1	300	C	.	.	U	.	.	.	.	.	.	.	.	.	.	.	.	0	4	2	26	21	.	.	.	.	.
	.	.				.											.				78	70					.
XDCS2	300	C	RA	LB		.	.	.	.	.	.	.	.	.	.	.	.	0	4	2	26	21	.	.	.	.	.
	.	.				.											.				78	70					.
XDCY1	500	D	RA	LB		.	1	.	.	.	3	.	.	.	1	1	.	D	0	4	2	26	21	.	.	.	.	.
	.	I				.											.				78	70					.
XDCY2	500	D	RA	LB		.	1	.	.	.	3	.	.	.	1	1	.	D	0	4	2	26	21	.	.	.	.	.
	.	I				.											.				78	70					.
XDF01	500	D	.	.	U	.	.	.	.	1	.	.	.	1	.	.	.	0	4	2	26	21	.	.	.	.	.
	.	I				.											.				78	70					.

STRU ROOM CODE LOAD	ROOM NAME	ARCHITECTURAL MATRL+FIN FL	WAL	CLG	CLG HT	DOOR SIZE	NOISE RM	NOISE SC	FLR
XDLR1	XRAY DIAG LITHOTRIPTER ROOM	SV	GLG	AT2	3000	1200	35	50	C
		VT	GPT	GPT	10-0	4-0	40		C
XDLT1	XRAY DIAG LINEAR TOMO/RAD UNIT	SV	GLG	AT1	3000	1200	35	40	5
		VT	GPT	GPT	10-0	4-0	40		100
XDM01	XRAY DIAG MAMMO FILM SCREEN TYPE	SV	GLG	AT1	3000	1200	35	40	5
		VT	GPT	GPT	10-0	4-0	40		100
XDM02	XRAY DIAG MAMMO XERORADIOGRAPHY	SV	GLG	AT1	3000	1200	35	40	5
		VT	GPT	.	10-0	4-0	40		100
XDMP1	XRAY DIAG MAMMO XEROGRAPHIC PROCESS	SV	GLG	AT1	3000	1200	35	40	5
		VT	GPT	GPT	10-0	4-0	40		100
XDMT1	XRAY DIAG MULTI-DIRECTIONAL TOMO	VT	GLG	AT1	3000	1200	35	40	5
		SV	GPT	GPT	10-0	4-0	40		100
XDR01	XRAY DIAG RAD TILT TABLE HOSP	VT	GLG	AT1	3000	1200	35	40	5
		SV	GPT	GPT	10-0	4-0	40		100
XDR02	XRAY DIAG RAD FLATTOP TABLE CLINIC	VT	GLG	AT1	3000	1200	35	40	5
		SV	GPT	G	10-0	4-0	40		100
XDRF1	XRAY DIAG RAD/FLUORO HOSP GENERAL	VT	GLG	AT1	3000	1200	35	40	5
		SV	GPT	GPT	10-0	4-0	40		100
XDRF2	XRAY DIAG RAD/FLUORO DIGITAL SYS	VT	GLG	AT1	3000	1200	35	40	5
		SV	GPT	GPT	10-0	4-0	40		100
XDRH1	XRAY DIAG RAD W/HEADSTAND	SV	GLG	AT1	3000	1200	35	40	5
		VT	GPT	GPT	10-0	4-0	40		100
XDSB1	XRAY DIAG SUPPORT - BARIUM PREP	SV	GLG	AT2	2400	900	35	40	3
		VT	GPT	.	8-0	3-0	40		60
XDUS1	XRAY DIAG ULTRASOUND REALTIME/DOPPL	SV	GLG	AT1	3000	1200	35	40	5
		VT	GPT	.	10-0	4-0	40		100
XFFA1	XRAY FILM FILES AREA - FIXED AISLE	VT	GPT	AT1	3000	900	35	40	12
		.	..	.	10-0	3-0	40		250
XFFA2	XRAY FILM FILES AREA - MOBILE AISLE	VT	GPT	AT1	3000	900	35	40	17
		.	..	.	10-0	3-0	40		350
XFP01	XRAY FILM PROCESSING - 1 PROCESSOR	SV	GLG	GLG	2400	L	35	45	5
		VT	GPT	.	8-0		40		100

APPENDIX A
ARCHITECTURAL AND ENGINEERING DESIGN REQUIREMENTS

	ELECTRICAL					MEDICAL GASES											HVAC								
						M	D				D	D	L												
ROOM	LIGHT		EM PWR			C	C	L	P	M	H	L	D	O	N	N				TEMP		R	FL		E	
CODE	LEV	N	PWR	LT	N	A	A	A	A	V	V	V	E	X	O	I	N	BL	AC	OA	SM	WN	H	IN	FN	X	N
XDLR1	500	D	.	.	U	1	.	.	.	2	.	.	.	1	1	.	D	0	4	2	26	21	.	.	.	.	.
	.	I			.												.				78	70					.
XDLT1	500	D	.	.	U	.	.	.	.	1	.	.	.	1	.	.	.	0	4	2	26	21	.	.	.	.	.
	.	I			.												.				78	70					.
XDM01	500	C	.	.	U	.	.	.	.	.	.	.	.	.	.	.	.	0	4	2	26	21	.	.	.	.	.
	.	.			.												.				78	70					.
XDM02	500	D	.	.	U	.	.	.	.	1	.	.	.	1	.	.	.	0	4	2	26	21	.	.	.	.	.
	.	I			.												.				78	70					.
XDMP1	500	C	.	.	U	.	.	.	.	.	.	.	.	.	.	.	.	+	4	2	26	21	.	90	.	.	.
	.	.			.												.				78	70					.
XDMT1	500	D	.	.	U	.	.	.	.	1	.	.	.	1	.	.	.	0	4	2	26	21	.	.	.	.	.
	.	I			.												.				78	70					.
XDR01	500	D	.	.	U	.	.	.	.	.	.	.	.	.	.	.	.	0	4	2	26	21	.	.	.	.	.
	.	I			.												.				78	70					.
XDR02	500	D	.	.	U	.	.	.	.	.	.	.	.	.	.	.	.	0	4	2	26	21	.	.	.	.	.
	.	I			.												.				78	70					.
XDRF1	500	D	.	.	U	.	.	.	.	.	.	.	.	.	.	.	.	0	4	2	26	21	.	.	.	.	.
	.	I			.												.				78	70					.
XDRF2	500	D	.	.	U	.	.	.	.	.	.	.	.	.	.	.	.	0	4	2	26	21	.	.	.	.	.
	.	I			.												.				78	70					.
XDRH1	500	D	.	.	U	.	.	.	.	1	.	.	.	1	.	.	.	0	4	2	26	21	.	.	.	.	.
	.	I			.												.				78	70					.
XDSB1	700	.	.	.	U	.	.	.	.	.	.	.	.	.	.	.	.	0	4	2	26	20	.	.	.	Y	L
	.	.			.												.				78	68					.
XDUS1	500	D	.	.	U	.	.	.	.	1	.	.	.	1	.	.	.	0	4	2	26	21	.	.	.	.	.
	.	I			.												.				78	70					.
XFFA1	300	.	.	.	.	.	.	.	.	.	.	.	.	.	.	.	.	0	4	2	26	20	.	.	.	.	.
	.	.			.												.				78	68					.
XFFA2	300	.	.	.	.	.	.	.	.	.	.	.	.	.	.	.	.	0	4	2	26	20	.	.	.	.	.
	.	.			.												.				78	68					.
XFP01	200	G	.	.	U	.	.	.	.	.	.	.	.	.	.	.	.	0	10	2.5	26	20	.	90	.	Y	L
	.	.			.												.				78	68					.

APPENDIX A
ARCHITECTURAL AND ENGINEERING DESIGN REQUIREMENTS

STRU ROOM CODE LOAD	ROOM NAME	ARCHITECTURAL MATRL+FIN FL	WAL	CLG	CLG HT	DOOR SIZE	NOISE RM	SC	FLR
XFP02	XRAY FILM PROCESSING - 2 PROCESSORS	SV	GLG	GLG	2400	900	35	45	5
		VT	GPT	.	8-0	3-0	40		100
XFPC1	XRAY FILM PROCESSING - CINE	SV	GLG	GLG	2400	900	35	45	5
		VT	GPT	.	8-0	3-0	40		100
XFSA1	XRAY FILM SORTING AREA	SV	GLG	AT1	2400	900	35	40	5
		VT	GPT	.	8-0	3-0	40		100
XFSC1	XRAY FILM STORAGE CINE FIXED SHELF	SV	GLG	AT1	2400	900	35	40	5
		VT	GPT	.	8-0	3-0	40		100
XFSR1	XRAY FILM SORTING/READING - SMALL	SV	GLG	AT1	2400	900	35	40	3
		VT	GPT	.	8-0	3-0	40		60
XMRC1	XRAY MAGNETIC RESONANCE CONTROL ARE	SV	GLG	AT1	2400	900	35	40	5
		VT	GPT	.	8-0	3-0	40		100
XMRC2	XRAY MAGNETIC RESONANCE COMPUTER RM	SV	GLG	AT1	2400	900	35	40	5
		VT	GPT	.	8-0	3-0	40		100
XMRE1	XRAY MAGNETIC RESONANCE EQUIP ROOM	SV	GLG	AT1	2400	900	35	40	5
		VT	GPT	.	8-0	3-0	40		100
XMRS1	XRAY MAGNETIC RESONANCE SCANNER	SV	GLG	AT1	VAR	1200	35	40	C
		VT	GPT	.	VAR	4-0	40		C
XMRV1	XRAY MAGNETIC RESONANCE VIEWING RM	SV	GLG	AT1	2400	900	35	40	5
		VT	GPT	.	8-0	3-0	40		100
XRM01	XRAY MOBILE RAD UNIT ALCOVE	SV	GVF	AT1	2400	OPEN	35	40	5
		VT	GPT	.	8-0	OPEN	40		100
XRM02	XRAY MOBILE C-ARM STORAGE	VT	GPT	AT1	2700	900	35	40	5
		SV	GLG	.	9-0	3-0	40		100
XTCC1	XRAY THERAPY COBALT CONTROL AREA	SV	GLG	AT1	2400	900	35	40	5
		VT	GPT	.	8-0	3-0	40		100
XTCE1	XRAY THERAPY COBALT AUX EQUIP ROOM	SV	GLG	AT1	2700	900	35	40	5
		VT	GPT	.	9-0	3-0	40		100
XTCT1	XRAY THERAPY COBALT THERAPY	SV	GLG	AT1	3000	1200	35	40	C
		VT	GPT	.	10-0	4-0	40		C
XTEM1	XRAY THERAPY ENTRY MAZE - ALL UNITS	SV	GLG	AT1	3000	SP	35	40	C
		VT	GPT	.	10-0		40		C

APPENDIX A
ARCHITECTURAL AND ENGINEERING DESIGN REQUIREMENTS

	ELECTRICAL					MEDICAL GASES											HVAC									
						M	D				D	D	L													
ROOM	LIGHT		EM PWR			C	C	L	P	M	H	L	D	O	N	N				TEMP		R	FL		E	
CODE	LEV	N	PWR	LT	N	A	A	A	A	V	V	V	E	X	O	I	N	BL	AC	OA	SM	WN	H	IN	FN	X	N
XFP02	200	G	.	.	U	.	.	.	.	.	.	.	.	.	.	.	.	0	10	2.5	24	20	.	90	.	Y	L
	.	.			.												.				75	68					.
XFPC1	200	G	.	.	U	.	.	.	.	.	.	.	.	.	.	.	.	0	10	2.5	24	20	.	90	.	Y	L
	.	.			.												.				75	68					
XFSA1	500	.	.	.	.	.	.	.	.	.	.	.	.	.	.	.	.	-	10	2.5	24	20	.	.	.	Y	L
	.	.			.												.				75	68					.
XFSC1	100	.	.	.	.	.	.	.	.	.	.	.	.	.	.	.	.	0	4	2	24	20	.	.	.	.	.
	.	.			.												.				75	68					
XFSR1	500	.	.	.	.	.	.	.	.	.	.	.	.	.	.	.	.	0	4	2	26	20	.	.	.	.	.
	.	.			.												.				78	68					.
XMRC1	300	A	.	.	.	.	.	.	.	.	.	.	.	.	.	.	.	0	4	2	26	20	.	.	.	.	.
	.	.			.												.				78	68					.
XMRC2	300	.	.	.	.	.	.	.	.	.	.	.	.	.	.	.	.	0	4	2	26	20	.	.	.	.	N
	.	.			.												.				78	68					.
XMRE1	300	.	.	.	.	.	.	.	.	.	.	.	.	.	.	.	.	0	4	2	26	20	.	.	.	.	.
	.	.			.												.				78	68					.
XMRS1	300	C	.	.	.	1	.	.	.	1	.	.	.	1	.	.	.	0	4	2	26	21	.	.	.	.	.
	.	I			.												.				78	70					.
XMRV1	300	.	.	.	.	.	.	.	.	.	.	.	.	.	.	.	.	0	4	2	26	20	.	.	.	.	.
	.	.			.												.				78	68					.
XRM01	150	.	.	.	E	.	.	.	.	.	.	.	.	.	.	.	.	0	.	.	.	.	.	.	.	.	K
	.	.			.												.				.	.					.
XRM02	150	.	.	.	.	.	.	.	.	.	.	.	.	.	.	.	.	0	4	2	26	20	.	.	.	.	.
	.	.			.												.				78	68					.
XTCC1	300	A	.	.	.	.	.	.	.	.	.	.	.	.	.	.	.	0	6	2	26	20	.	.	.	.	.
	.	.			.												.				78	68					.
XTCE1	300	.	.	.	.	.	.	.	.	.	.	.	.	.	.	.	.	0	6	2	26	21	.	.	.	.	.
	.	.			.												.				78	70					.
XTCT1	500	D	.	LS	.	1	.	.	.	1	.	.	.	1	.	.	.	0	6	2	26	20	.	.	.	.	.
	.	I			.												.				78	68					.
XTEM1	200	.	.	LS	.	.	.	.	.	.	.	.	.	.	.	.	.	0	6	2	26	20	.	.	.	.	.
	.	.			.												.				78	68					.

APPENDIX A
ARCHITECTURAL AND ENGINEERING DESIGN REQUIREMENTS

STRU ROOM CODE LOAD	ROOM NAME	ARCHITECTURAL MATRL+FIN FL	WAL	CLG	CLG HT	DOOR SIZE	NOISE RM	NOISE SC	FLR
XTFF1	XRAY TEACHING FILM FILES	SV	GLG	AT1	3000	1200	35	40	12
		VT	GPT	.	10-0	4-0	40		250
XTLA1	XRAY THERAPY LINEAR ACCELERATOR 6ME	SV	GLG	AT1	3000	1200	35	40	C
		VT	GPT	.	10-0	4-0	40		C
XTLA2	XRAY THERAPY LINEAR ACCEL HIGH VOLT	SV	GLG	AT1	3000	1200	35	40	C
		VT	GPT	.	10-0	4-0	40		
XTLA3	XRAY THERAPY LINEAR ACCEL DUAL VOLT	SV	GLG	AT1	3000	1200	35	40	C
		VT	GPT	.	10-0	4-0	40		
XTLB1	XRAY THERAPY PHYSICS LABORATORY	SV	GLG	AT1	2700	900	35	40	5
		VT	GPT	.	9-0	3-0	40		100
XTLC1	XRAY THERAPY LINEAR ACCEL CONTROL	SV	GLG	AT1	2400	900	35	40	5
		VT	GPT	.	8-0	3-0	40		100
XTMF1	XRAY THERAPY MOLD FABRICATION SHOP	SV	GLG	AT1	2700	900	35	40	5
		VT	GPT	.	9-0	3-0	40		100
XTRT1	XRAY THERAPY RADIUM TX STORAGE/PREP	SV	GLG	AT1	2400	900	35	40	5
		VT	GPT	.	8-0	3-0	40		100
XTSA1	XRAY THERAPY SUPERFICIAL ADD-IN	SV	GLG	AT1	2400	900	35	40	5
		VT	GPT	.	8-0	3-0	40		100
XTSC1	XRAY THERAPY SUPERF/ORTHO CONTROL	SV	GLG	AT1	2400	900	35	40	5
		VT	GPT	.	8-0	3-0	40		100
XTSC2	XRAY THERAPY SIMULATOR CONTROL ROOM	SV	GLG	AT1	2400	900	35	40	5
		VT	GPT	.	8-0	3-0	40		100
XTSE1	XRAY THERAPY SUPERF/ORTHO AUX EQUIP	SV	GLG	AT1	2400	900	35	40	5
		VT	GPT	.	8-0	3-0	40		100
XTSG1	XRAY THERAPY SIMULATOR GANTRY ROOM	SV	GLG	AT1	3000	1200	35	40	5
		VT	GPT	.	10-0	4-0	40		100
XTST1	XRAY THERAPY SUPERFICIAL/ORTHO TX	SV	GLG	AT1	2400	900	35	40	5
		VT	GPT	.	8-0	3-0	40		100
XTTP1	XRAY THERAPY TREATMENT PLANNING RM	SV	GLG	AT1	2400	900	35	40	5
		VT	GPT	.	8-0	3-0	40		100
XVC01	XRAY VIEWING/CONSULTATION AREA	SV	GLG	AT1	2400	900	30	40	3
		VT	GPT	.	8-0	3-0	35		60

APPENDIX A
ARCHITECTURAL AND ENGINEERING DESIGN REQUIREMENTS

	ELECTRICAL					MEDICAL GASES											HVAC								
						M	D				D	D	L												
ROOM	LIGHT		EM PWR			C	C	L	P	M	H	L	D	O	N	N				TEMP		R	FL		E	
CODE	LEV	N	PWR	LT	N	A	A	A	A	V	V	V	E	X	O	I	N	BL	AC	OA	SM	WN	H	IN	FN	X	N
XTFF1	300	.	.	LS	.	.	.	.	.	.	.	.	.	.	.	.	.	0	6	2	26	20	.	.	.	.	.
	.	.			.												.				78	68					.
XTLA1	500	D	.	LS	.	1	.	.	.	1	.	.	.	1	.	.	.	0	6	2	26	20	.	.	.	Y	.
	.	I			.												.				78	68					.
XTLA2	500	D	.	LS	.	1	.	.	.	1	.	.	.	1	.	.	.	0	6	2	26	20	.	.	.	Y	.
	.	I			.												.				78	68					.
XTLA3	500	D	.	LS	.	1	.	.	.	1	.	.	.	1	.	.	.	0	6	2	26	20	.	.	.	Y	.
	.	I			.												.				78	68					.
XTLB1	500	C	.	.	.	.	.	.	.	.	.	.	.	.	.	.	.	-	6	2	26	21	.	.	.	.	.
	1100	.			.												.				78	70					.
XTLC1	300	A	.	.	.	.	.	.	.	.	.	.	.	.	.	.	.	0	6	2	26	20	.	.	.	.	.
	.	.			.												.				78	68					.
XTMF1	500	.	.	.	.	.	.	.	.	.	.	.	.	.	.	.	.	-	6	2	26	20	.	.	.	Y	.
	.	.			.												.				78	68					M
XTRT1	500	C	.	.	.	.	.	.	.	.	.	.	.	.	.	.	.	-	6	2	26	20	.	80	.	Y	.
	1100	.			.												.				78	68					M
XTSA1	500	.	.	LS	.	.	.	.	.	.	.	.	.	.	.	.	.	0	6	2	26	20	.	.	.	.	.
	.	.			.												.				78	68					.
XTSC1	300	A	.	LS	.	.	.	.	.	.	.	.	.	.	.	.	.	0	6	2	26	20	.	.	.	.	.
	.	.			.												.				78	68					.
XTSC2	300	A	.	.	U	.	.	.	.	.	.	.	.	.	.	.	.	0	6	2	26	20	.	.	.	.	.
	.	.			.												.				78	68					.
XTSE1	200	.	.	LS	E	.	.	.	.	.	.	.	.	.	.	.	.	0	6	2	26	20	.	.	.	.	.
	.	.			.												.				78	68					.
XTSG1	300	.	.	.	.	1	.	.	.	1	.	.	.	1	.	.	.	0	6	2	26	21	.	.	.	.	.
	.	.			.												.				78	70					.
XTST1	500	C	.	.	.	1	.	.	.	1	.	.	.	1	.	.	.	0	6	2	26	21	.	.	.	.	.
	.	.			.												.				78	70					.
XTTP1	500	.	.	.	.	.	.	.	.	.	.	.	.	.	.	.	.	0	6	2	26	21	.	.	.	.	.
	.	.			.												.				78	70					.
XVC01	300	.	.	.	.	.	.	.	.	.	.	.	.	.	.	.	.	0	4	1	26	20	.	.	.	.	.
	.	.			.												.				78	68					.

APPENDIX A
ARCHITECTURAL AND ENGINEERING DESIGN REQUIREMENTS

STRU ROOM CODE LOAD	ROOM NAME	ARCHITECTURAL MATRL+FIN FL	WAL	CLG	CLG HT	DOOR SIZE	NOISE RM	SC	FLR
XVCC1	XRAY VIEWING/CONSULTATION CINE	SV	GLG	AT1	2400	900	30	40	3
		VT	GPT	.	8-0	3-0	35		60
XXXX1	HYPERBARIC CHAMBERS RM	VT	GPT	AT1	VAR	1200	30	40	5
		.	..	.	VAR	4-0	35		100
XXXX2	AIR HANDLING ROOMS	CS	SSP	SSP	VAR	VAR	50	55	6
		.	..	.	VAR	VAR	70		125
XXXX3	CENTRAL PLANT ROOMS	CS	SSP	SSP	VAR	VAR	50	55	12
		.	..	.	VAR	VAR	70		250
XXXX4	MECHANICAL ROOMS	CS	SSP	SSP	VAR	VAR	50	55	B
		.	..	.	VAR	VAR	70		B

APPENDIX A
ARCHITECTURAL AND ENGINEERING DESIGN REQUIREMENTS

	ELECTRICAL					MEDICAL GASES											HVAC								
						M	D				D	D	L												
ROOM CODE	LIGHT LEV	N	EM PWR	LT	N	C A	C A	L A	P A	M V	H V	L V	D E	O X	N O	N I	N	BL	AC	OA	TEMP SM	WN	R H	FL IN	FN	E X	N
XVCC1	300	.	.	.	.	.	.	.	.	.	.	.	.	.	.	.	.	0	4	1	26	20	.	.	.	.	.
	.	.			.												.				78	68					.
XXXX1	300	.	RA	LB	.	.	.	.	.	.	.	.	.	.	.	.	.	0	4	1	26	20	.	.	.	.	.
	.	.			.												.				78	68					.
XXXX2	300	.	.	.	S	.	.	.	.	.	.	.	.	.	.	.	.	-	.	.	.	10	.	.	.	.	.
	.	.			.												.				.	50					.
XXXX3	300	.	.	.	S	.	.	.	.	.	.	.	.	.	.	.	.	-	.	.	.	10	.	.	.	.	.
	.	.			.												.				.	50					.
XXXX4	300	.	.	.	S	.	.	.	.	.	.	.	.	.	.	.	.	-	.	.	.	10	.	.	.	.	.
	.	.			.												.				.	50					.

BLANK PAGE

APPENDIX B: DESIGN SUBMITTALS AND DOCUMENTATION

B.1 Block Plan Submittal (S-1). Block Plans shall include at least three substantially different alternative design solutions. The intent is to either select one of the three schemes or develop a composite scheme for room-by-room floor plan development in S4. Each block plan will show building massing, siting, and the layout of the gross function areas (blocks) within the building. Although not normally required, DMFO may be included in the review process where size or complexity warrants early participation or DMFO requests to participate. The following are the suggested requirements for the Block Plan effort:

B.1.1 Site plans of each scheme showing existing and proposed structures, topography, utilities, roads, and parking.

B.1.2 Floor plans for each scheme showing each level with circulation patterns and principal dimensions. On addition/alteration projects, existing versus new conditions must be clearly delineated.

B.1.3 Gross area tabulation of floor area, along with small scale, single-line, dimensioned drawings, to reflect the total space required in Figure 2-7 format.

B.1.4 Preliminary cost estimate for each scheme.

B.1.5 Narrative description of each scheme and scheme comparisons explaining strong and weak points of each solution and the rationale for the recommended solution. The following features must be addressed for each scheme: expandability, flexibility, proposed structural system, proposed mechanical system(s), electrical system, energy conservation features, net-to-gross ratio, phasing, and initial constructability considerations.

B.1.6 Site investigation report will address the existing and proposed conditions on and near the site including: demolition requirements (if any), topography, adjacent facilities, site vegetation, access roads, easements, safety clearances, site acoustics, parking (existing and proposed), soil conditions, floodplains or wetlands criteria, asbestos and hazardous waste on-site, and energy considerations such as building orientation, solar access, and prevailing wind conditions. Provide a summary of any environmental impact studies, base master plans and base architectural plans where available. Provide photographs of the site and nearby structures.

B.1.7 Site utilities report will address: storm drainage, sewer, water (potable and fire protection), gas, central heating and cooling, electricity, telephone, fire alarm, and communications. Address the quality and capacity of the existing utilities to serve the proposed project and any demolition required.

B.1.8 Economic Analyses (EA) of new versus addition/alteration where requested by DMFO, or update(substantiation) previous EA.

B.1.9 Pencil sketch perspectives for each proposed solution.

B.1.10 A massing model of each solution, particularly addition/alteration projects where "new" and "addition" versus existing must be clearly defined.

B.1.11 Updating or verification of as-built and/or as-utilized drawings in addition-alteration projects may be required as directed by the Design Agent.

B.1.12 The narrative portion of the submittal, calculations, cost estimate, and reports shall be on 8-1/2 x 11 inch sheets packaged in a standard U.S. 3-ring binder with labeled subject dividers, sequential page numbers, and table of contents.

B.2 Schematic Design Submittal (S-2). This submittal includes development of the room-by-room floor plans, elevations, and initial analysis of the major architectural and engineering systems based on the selected (or composite) block plan from S-1. The primary purpose of this submittal and review is to identify and resolve all major space program deficiencies at an early stage in design, develop the massing and aesthetics of the facility, and "fix" the scope of the building. The Design Agent, using Military department representatives, and A-E, if required, will present the reviewed S-2 to DMFO. Requests for scope revisions with justification should be submitted at this time. Scope changes will not be entertained after approval of S-2 unless fully justified. DMFO will provide approval/disapproval, with review comments, within 14 days of the presentation. The following are the minimum DMFO requirements for S-2:

B.2.1 Executive Summary of the following:

- various Block Plan alternatives from S-1, and rationale for the selected scheme. The primary block plan drawings from S-1 shall be included as double-page, fold-out, reduced drawings.

- summary of the narrative describing various proposed architectural and engineering aspects of the projects.

B.2.2 Site plans showing building location, future expansion, and existing and proposed structures, topography, utilities, roads and parking.

B.2.3 Floor plans for each floor showing all programmed spaces, corridors, structural grid system (including columns), electrical and mechanical equipment rooms, and stairs/elevators/escalators to meet the functional requirements. All spaces must be labeled with the room name, the room code from the DMFO Program For Design (PFD), and the programmed and designed net areas. For addition/alteration projects, preliminary demolition drawings, with photographs to depict conditions are required.

B.2.4 Plans showing major circulation paths in and around the facility, for significant projects, only.

B.2.5 A separate plan of the blast hardened/CBR protected area, if programmed, showing how the spaces would be utilized during contingency operations.

B.2.6 Exterior elevations and major building sections appropriate to the level of Concept Design development. To assure Post or Base compatibility, observe and document the physical features of the site and the character/style of any surrounding building(s).

B.2.7 Refined massing model, from S-1, as required.

B.2.8 A comprehensive narrative describing various proposed architectural and engineering aspects of the projects as follows:

B.2.8.1 Civil Design Narrative. Include site investigation and utilities reports based on further refinement of the S-1 requirements;

B.2.8.2 Architectural Design Narrative. Address the overall architectural concept including: Exterior wall systems and finish materials being considered, (develop alternative exterior materials and wall assemblies, compare each exterior wall scheme by both qualitative and quantitative analysis and include energy-conscious design considerations; prepare dew point calculations following recommended design procedures in the ASHRAE Handbook of Fundamentals; acoustics, base architectural plan, floor-to-floor heights, proposed roofing materials, slope(s), styles, contingency and mobilization features, energy conservation features, life safety, and fire protection features, and Uniform Federal Accessibility Standards (UFAS) compliance;

B.2.8.3 Structural Design Narrative. Alternative Structural Systems. A minimum of three structural systems shall be thoroughly evaluated and submitted with a recommended selection of a structural system based on an economic study. The structural system selected shall be the one which best combines economy and suitability regarding functionality, design systems, space configuration, architectural features and seismic (Section 6) resistance configuration for the specific project. The comparative study shall address the cost of foundations and superstructure as well as appropriate cost factors for architectural, fire protection, mechanical, electrical, and seismic conditions where these vary between structural systems. Some structural systems are more compatible than others with the architectural, horizontal flexibility, fire protection, mechanical, electrical, and seismic requirements for facilities. Structural systems shall be evaluated within this context to determine penalties or advantages of alternate designs. Narrative justification, describing the basis for system selection, along with drawings of the selected structural system adequately developed so that no additional major engineering decisions are required, shall be provided. The economic study shall employ a method which considers all factors and requirements of the system's total life cycle costs. The method employed shall incorporate cost per unit of area, erection time, compatibility with other systems, nonstructural flexibility, lateral load resistance, noise attenuation and the natural vibration period of the structure, when applicable. For facilities two stories or greater located in regions of high or moderate seismic risk, as determined in Section 6, at least one structural system that includes components that provide base isolation or active or passive energy dissipation should be included as a structural system alternative.

B.2.8.4 Seismic Design Narrative. Summarize the seismic design considerations including "I" and "K" values and the level of protection required. Discuss post-earthquake operation requirements;

B.2.8.5 Heating, Ventilation, and Air Conditioning (HVAC) Design Narrative. Discuss design considerations and space requirements for the primary and secondary HVAC systems being considered. Provide a written description of the anticipated smoke control system, passive or active. If an Engineering Smoke (EMCS) is planned, provide a discussion on economics justification;

B.2.8.6 Plumbing Design Narrative. Discuss design considerations and space requirements for the various plumbing systems, including domestic

hot and cold water, fuel gas, medical gases, sanitary waste, acid waste, and storm drains. Discuss water supply, quality, required storage, and distribution systems. Discuss hot water generation, storage, temperatures, and distribution systems. Address various types of medical gases, storage, and distribution systems;

B.2.8.7 Electrical Design Narrative. Discuss design considerations and space requirements for electrical systems. Address the following: voltage, routing, and reliability of primary services; connected and demand load; normal and essential electrical system; emergency power; lighting systems; and energy conservation features;

B.2.8.8 Communication Design Narrative. Discuss design considerations and space requirements for the following: telephone, intercom, dictation, paging, public address, televisions, nurse call, Comprehensive Healthcare [Computer] Systems (CHCS), data communication, and security systems; uninterruptible power supply (UPS);

B.2.8.9 Fire Protection Design Narrative: Address the following: type of construction, fire rating of materials, occupancy classification, fire detection, alarm, and suppression systems. Provide a summary of the latest Fire Safety Evaluation System Study for addition/alteration projects;

B.2.8.10 If IBS is planned for other than medical centers/teaching hospitals, provide an expanded justification;

B.2.8.11 If an Engineered Smoke Control System (ESCS) or an Energy Monitoring and Control System (EMCS) is planned, provide an economic justification; and

B.2.8.12 Construction Phasing Narrative. For addition/ alteration projects, provide a narrative description of the proposed Construction Phasing to evaluate the continued/uninterrupted operation of the existing facility during construction and the associated impact on the construction cost. Identify requirements for temporary buildings to serve as swing space during the construction and the cost associated with these buildings.

B.2.9 Gross area tabulation of floor area, along with a small scale, single-line, dimensioned key plan, to reflect the total space required in Figure 2-5 format.

B.2.10 Net area tabulations, including net to gross calculations, in Figure 2-6 format.

B.2.11 A net-to-gross area conversion summary comparing the as-designed condition with the applicable net-to-gross square feet allowances in Figure 2-8.

B.2.12 Updated cost estimate.

B.2.13 The narrative portion of the S-2 submittal, calculations, and cost estimate shall comply with paragraph B.4.2.

B.3 Design Development Submittal (S-3). This submittal is about 30 percent of the total design effort in all disciplines and includes further development of DMFO-approved S-2 submittal. The purpose of this submittal is to finalize all major design/engineering decisions and to validate project scope and cost. DMFO does not normally review this

submittal; however, if the design is developed well enough, it may be submitted to DMFO as the S-4. The following are minimum requirements for this submission:

B.3.1 An update of all requirements in the S-2 Submission.

B.3.2 An Executive Summary (in addition to the other submittal requirements) to include design intent, proposed architectural engineering systems, results of VE study, phasing plans, costs, scope, and a general description of the project. Include sufficient detail to provide an overview of the project. The Executive Summary shall either be bound separately for hospital type projects or shall be included as a separate chapter in the Design Analysis for other medical projects.

B.3.3 Plans showing design in sufficient detail to allow for an in-depth review and a reliable cost estimate. As a minimum, provide the following:

B.3.3.1 Site plans showing building location, future expansion, existing and proposed structures, topography, utilities, roads, parking, and landscaping;

B.3.3.2 Floor plans for each floor showing all programmed spaces, corridors, structural grid system (including columns), electrical/communications/ mechanical equipment rooms, and stairs/elevators/escalators to meet the functional requirements. All spaces must be labeled with the room name, the room code from the DMFO program for design, and the programmed and designed net areas;

B.3.3.3 All exterior elevations and major building sections;

B.3.3.4 Reflected ceiling plans showing ceiling grid and light fixture placement;

B.3.3.5 Equipment plans showing all category A, B, C, D, E, F, and G equipment. Show Category A, B, and E equipment on the equipment drawings and floor plans with solid lines and Category C and F equipment with dashed lines. Provide Joint Schedule Numbers (JSN) as indicated in the Medical Facility Room Contents List (MFRCL) for all applicable logistical categories. The Joint Schedule Numbers (JSN) or the National Stock Numbers (NSN), within the MIL-STD 1691, shall not be used as substitutes for contract specifications and detail drawings. Citing JSN numbers and nomenclatures will not relieve the designer of the responsibility to verify and provide all necessary detail drawings and specifications showing actual dimensions, utility connections, accessories, quantity, quality, and performance required. Where reference to a specification is included in a JSN item description, items identified as Category "A" in "CAT" column shall be procured against the latest authorized specification or purchase description. Designers shall assure that current specifications and their latest amendments or purchase description shall be used in the procurement of equipment supplied by the Construction Contractor.

B.3.3.6 HVAC plans showing layout of mechanical rooms and one line drawing of distribution systems. Provide schematic diagrams of the major supply, return, and exhaust systems;

B.3.3.7 Plumbing plans showing plumbing, medical air, vacuum, and medical gas equipment and major distribution lines including riser diagrams;

B.3.3.8 Electrical plans showing electrical room layouts, light fixture locations, receptacle locations, motor controls, and locations of panelboards and distribution equipment. Provide single line diagrams of the normal/ essential electrical systems,emergency power, and UPS;

B.3.3.9 Communication plans showing location of communication equipment and devices. Show layout of communication closets and provide single line diagram for each system;

B.3.3.10 Fire protection plans showing sprinklered areas, fire rated walls and doors, smoke compartmentation, fire pumps, stand pipes, fire extinguisher cabinets, fire alarm, and fire exits.

B.3.3.11 For addition/alteration projects, preliminary demolition drawings indicating the removal of structural, architectural, mechanical/electrical/communications systems, asbestos and hazardous materials. Photographs are desirable to accurately communicate existing conditions.

B.3.4 A comprehensive narrative describing various architectural and engineering systems being considered:

B.3.4.1 Civil Design Narrative. Include the site investigation and utilities reports based on further refinement of the S-2 requirements. Summarize the civil design parameters, parking, and the major features of the design;

B.3.4.2 Architectural Design Narrative. Address the overall architectural concept including: interior (in accordance with Appendix A) and exterior finish materials (to include proposed Structural Interior Design (SID) color scheme/selections, see para 4.14), wall systems, roofing systems, acoustics, base architectural plan, floor-to-floor heights, contingency and mobilization features, energy conservation features, life safety, UFAS, and fire protection features;

B.3.4.3 Structural Design Narrative. Address the alternative structural foundation and framing systems considered and provide economic basis for system selection. Address long-span versus other alternatives and concrete versus steel structure. Summarize the structural design parameters and the major features of the design;

B.3.4.4 Seismic Design Narrative. Summarize the seismic design considerations including "I" and "K" values and the level of protection required. Discuss post-earthquake operation requirements. Summarize the structural design parameters and the major features of the design;

B.3.4.5 Heating, Ventilation, and Air Conditioning (HVAC) Design Narrative. Provide a summary of the primary and secondary HVAC systems considered and the economic basis for system selection. Summarize the proposed control systems, fire protection features, and the energy conservation features being considered;

B.3.4.6 Plumbing Design Narrative. Describe the various plumbing systems, including domestic hot and cold water, fuel gas, medical gases, sanitary waste, acid waste, and storm drains. Discuss water supply, quality, required storage, and distribution systems. Discuss hot water generation, storage, temperatures, and distribution systems. Address various types of medical gases, storage, and distribution systems;

B.3.4.7 Electrical Design Narrative. Summarize the electrical design parameters and the major features of the design. Address the following: voltage, routing, and reliability of primary services; connected and demand load; normal /essential/emergency electrical system; lighting systems; and energy conservation features;

B.3.4.8 Communication Design Narrative. Summarize the communication systems design parameters and the major features of the design. Discuss the following: telephone, intercom, dictation, paging, public address, television, nurse call, CHCS, data communication, and security systems;

B.3.4.9 Fire Protection Design Narrative: Summarize the fire protection systems design parameters and the major features of the design. Address the following: type of construction, fire rating of materials, occupancy classification, fire detection, alarm, and suppression systems. Provide a summary of the latest Fire Safety Evaluation System Study for addition/alteration projects;

B.3.4.10 Integrated Building System (IBS) Narrative. If IBS was approved at S-2, provide a summary of the IBS design parameters and the major features of the design;

B.3.4.11 Engineered Smoke Control System (ESCS) narrative. If an ESCS or an Energy Monitoring and Control System (EMCS) was approved at S-2, provide a summary of the ESCS/EMCS design parameters and the major features of the design;

B.3.4.12 Energy Conscious Design Narrative. Discuss all energy conscious design considerations implemented and considered for the design. Address all design disciplines that affect energy consumption. In addition, address the following: siting, orientation, solar access, and climatic influences; conservation (systems selection, etc.); renewable energy features (passive solar/daylighting, active solar, etc.); energy budget compliance; energy conscious design summary and other important energy design issues. The feasibility of total or selective energy systems shall be evaluated;

B.3.4.13 Food Service Narrative (when applicable). Summarize the food service systems design parameters and the major features of the design. Discuss the various systems considered and the economic basis for the system selections;

B.3.4.14 Materials Handling and Transportation Systems Narrative (when applicable). Summarize the materials handling and transportation systems design parameters and the major features of the design. Include escalators, elevators, cart lifts, automatic box conveyor systems, dumb-waiters, linen and trash chutes, pneumatic tubes, etc. The study is to include equipment requirements life-cycle-costs, maintenance, appearance, ease of operation, noise, security, maintainability, and availability in a competitive marketplace for each system;

B.3.4.15 Waste Handling Systems Narrative. Summarize the waste handling systems design parameters and the major features of the design. Address trash removal; hazardous, infectious, and biological waste; retort sterilizers; incinerators; and other waste handling features of the design; and

B.3.4.16 Security Systems Narrative. Summarize the security systems design parameters and the major features of the design.

B.3.5 Detailed Cost Estimate.

B.3.6 An updated DD Form 1391 reflecting the reviewed cost estimate, any changes to the project description, and justification.

B.3.7 Gross area tabulation of floor area, along with small scale, single-line, dimensioned drawings, to reflect the total space required in Figure 2-5 format.

B.3.8 Updated net area tabulations, including net to gross calculations, in the format of Figure 2-6.

B.3.9 Outline specifications showing basic intent.

B.3.11 Room finishes schedule keyed to the plans by room number and name. Provide color boards with samples of major finishes.

B.3.12 Equipment list showing all category A, B, C, D, E, F and G equipment for each room keyed to the plans by room number and name. Provide equipment data sheets for all equipment that requires utility connections. The AE must develop the initial official project MFRCL into a viable room-by-room listing. Coordinate substitutions or changes with the using Military Department. The type, quantity, and location of biological, radioisotope, fume, canopy, and laminar air hoods shall also be indicated in the equipment list. Provide an appropriate catalog cut sheet(s) for all items of equipment having a logistical category code of A, B, E, or F and any C and G items having unique utility requirements, structural support, or space requirements.

B.3.13 A pencil sketch perspective drawing depicting the proposed structure. This sketch will be critically reviewed as the basis for the subsequent rendering requirement. This requirement does not apply to projects which are primarily life safety code upgrade and minor additions.

B.3.14 Finalized model (if required by the Design Agent) , showing the site, site circulation, parking, massing of structure, and a delineation between new and existing if the project contains additions and/or alteration.

B.3.15 The narrative portion of the submittal, calculations, and cost estimate shall be packaged in standard U.S. 3-ring binders with labeled subject dividers, sequential page numbers, and table of contents.

B.3.16 Value Engineering Study (VE). Conduct Value Engineering (VE) study during design following the S-3 submission in accordance with DoD Directive 4245.8. Value Engineering Studies consist of investigations of certain high-cost areas in a design to determine if an alternate way exists to achieve an improved design at a lower life-cycle-cost. The main objectives of VE studies are reduced life-cycle-cost and improved quality of design. The application of Value Engineering shall not result in lowering criteria or quality standards as established by the guidance in this document or reduction in the scope of the project.

B.4 35 Percent Design Submittal (S-4). This submittal is as a minimum 35 percent of the total design effort in all disciplines and includes a corrected and refined S-3 package based on the S-3 review. The reviewed S-4 will be submitted to DMFO by the Design Agent and the using Military Department. A-E participation may be required on large or complex projects. Final scope and PA (cost) shall be determined with

this submission. The minimum requirements of this submission are the same as described for S-3 and a copy of the VE Study.

B.4.1 This is considered the "technical submission" and all issues regarding costs, Value Engineering Study (VE), constructability, phasing, and any other special studies must be resolved, though the results of all studies may not be incorporated prior to presenting this submission to DMFO for approval. Action taken on Value Engineering proposals must be included with this submission.

B.4.2 The narrative portion of the submittal, calculations, and cost estimate shall be packaged in standard U.S. 3-ring binders with labeled subject dividers, sequential page numbers, and table of contents. Drawings shall be at a minimum 1:100 SI (1/8 inch scale); however 1:50 SI (1/4 inch) scale may be necessary for clarity on equipment plans, mechanical and electrical equipment room layouts, complex rooms or departments, interior elevations. Full-size or half-size drawings will be provided as stipulated in the distribution schedule.

B.4.3 Rendering. A final rendering is prepared after 35 Percent Design Submission approval. A color photograph of the original rendering, aproximately 5OO mm X 400 mm (20 x 16 inch) in a 700 mm X 500 mm (28 x 20 inch) brushed aluminum frame shall be sent to DMFO. The photograph is to reflect the 35 percent review comments and be titled, matted, framed, and glazed with nonglare tempered glass or plexiglas. Other photographs are to be distributed as scheduled by the Design Agent in coordination with the using Military Department at the prenegotiation conference.

B.5 Final Design (35 percent to 100 percent). The final design phase may be initiated only after approval of Concept Design by the DMFO. If, in the preparation of Contract Documents (CD's), it is necessary to deviate substantially from the approved Concept Design, such as the rearrangement of a major medical department or a change in the interrelationship of functional elements, design may be suspended and the pertinent facts and justifications concerning the deviations will be submitted for review and approval by DMFO.

B.5.1 Contract Documents (CD's). Final working drawings shall be prepared only to the scale necessary for clarity, good bidding, and ease of constructability. Where dictated by complexity, CD's shall be drawn to 1/4-inch to the foot. To reduce the sheer volume of production drawings, those areas and disciplines not requiring 1/4 scale drawings for bidding shall be prepared at 1/8 scale.

B.5.2 Comprehensive Interior Design (CID). The final design phase, at option of using Military Department, may include a Comprehensive Interior Design (CID) effort for furniture and accessory selection, layout and identification, and documentation for procurement. The Comprehensive Interior Design (CID) package is to be coordinated with the interior finishes and colors Structural Interior Design (SID) early in the final design phase so that the first submittal of the CID will be fully coordinated with the building design at S-5. Subsequent selections of furnishings and medical equipment are to be coordinated with the CID. See Glossary, para 4.14, and para 4.17 for expanded definitions of CID and SID.

B.5.3 65 Percent Submittal (S-5). On a case-by-case basis, DMFO may request submission of 65 Percent Preliminary Working Drawings. The Design Agent, with the participation of the using Military Service, may

develop the specific submittal requirements to define the S5 level of design effort.

B.5.3.1 Comprehensive Fire Protection Design. All fire protection provisions shall be summarized and submitted as a separate plan supported by a fire protection design analysis, including fire protection drawings developed during the Concept phase of the design. The fire protection study shall include related design considerations and criteria that have been coordinated among all the affected disciplines and shall serve as the basis for the design, construction, and future operation of the building. If required by the Design Agent, a completed Statement of Construction will be provided at the completion of construction by the contractor.

B.5.3.2 Equipment Specifications. The AE shall develop specifications for all equipment that does not have current guide specifications. Update the specifications to permit procurement of the latest model of equipment. Develop the specifications to accommodate at least three reputable vendors of the same type equipment when practicable. Coordinate problem items with the using Military Department. Include the scope of services to be provided by mechanical and electrical contractors for installing government furnished equipment. The Joint Schedule Numbers (JSN) or the National Stock Numbers (NSN), within the MIL-STD 1691, shall not be used as substitutes for contract specifications and detail drawings. Citing JSN numbers and nomenclatures will not relieve the designer of the responsibility to verify and provide all necessary detail drawings and specifications showing actual dimensions, utility connections, accessories, quantity, quality, and performance required. Where reference to a specification is included in a JSN item description, items identified as Category "A" in "CAT" column shall be procured against the latest authorized specification or purchase description. Designers shall assure that current specifications and their latest amendments or purchase description shall be used in the procurement of equipment supplied by the Construction Contractor.

B.5.4 <u>100 Percent/Final Submittal (S-6)</u>. When the design is complete, the Design Agent will submit a copy of the final documents (i.e. drawings, specification, cost estimate, instructions to bidders, etc.) to DMFO. Along with this package, the Design Agent shall provide a memorandum to DMFO certifying that the design has been completed and that all technical requirements and cost criteria approved at the 35 Percent Design stage have been incorporated into the Final Design.

APPENDIX C: UNIVERSAL X-RAY ROOM

C.1 Definition of Universal X-Ray Room. "The universal X-ray room shall be capable of accepting all routine radiographic, fluoroscopic, and tomographic equipment, up to 1200 ma, 150 kvp, regardless of manufacture, during initial installation and subsequent replacement actions with little, if any, facility modification. The procedures shall be performed unencumbered and without any restriction of system components, patient size, or any known procedure that any installed X-ray equipment can perform now or in the future." This definition does not apply to digital radiography, special procedure rooms, C-arms, or angiography rooms.

C.2 Criteria.

C.2.1 Planning and Programming. The universal room shall be a maximum of 28 net m^2 (300 net square feet) including space for equipment, control booth, and circulation. Critical room dimensions and layouts are given in Figure
C-1. Utilities distribution methods may be modified for use in projects utilizing IBS concepts when implemented (see Section 19).

C.2.2 Electrical Raceway System. An extensive raceway system is provided so the universal room will accept any manufacturer's equipment without additional raceways, facility modifications, or use of exposed wiring. The raceway system consists of trench floor ducts, lay-in wall ducts, and ceiling cable trays as shown on Figure C-1 and C-2.

C.2.2.1 Floor ducts are bottom-type trench duct, with nominal 90 mm (3.5 in.) by 300 mm (12 in.) 250 mm (10-inch) tub with a 300 mm (12-inch) wide, 8 mm (1/4-inch) thick steel cover plate. Cover plate must be installed flush with and have the same tile insert as the floor. Provide a gasket on the cover plate to maintain water tightness.

C.2.2.2 Wall ducts are nominal 10 mm (3.5 in.) by 250 mm (10 in.) with 300 m (12-inch) wide flush mounted cover plates finished to match the walls. Wall duct must be UL listed for enclosure of wiring to x-ray machines (reference C-a).

C.2.2.3 Ceiling cable trays are nominal 10 mm (3.6 in.) by 300 mm (12 in.) 80 mm (3-inch) load depth NEMA Class 12A ladder type installed above the finished ceiling. Wall duct, nominal 10 mm (3.5 in.) by 250 mm (10 inch), may be used in lieu of cable trays.

C.2.2.4 Partitions must be provided in all ducts and cable trays to separate high and low voltage cables.

C.2.3 Electrical Service Requirements. Each universal room must have adequate power service to insure that all X-ray equipment can be installed without additional facility related electrical work. All feeder conductors will be copper.

C.2.3.1 Power Quality. The facility power system must provide the specified nominal voltage (480 V or 240 V) plus or minus 5 percent to each universal room. Special power conditioning equipment, if required, should be identified and provided with the X-ray installation.

C.2.3.2 Three-Phase Rooms. If the room will receive three-phase X-ray equipment, provide 150 amp, 480 volt, three-phase (3-wire and

ground) service to the room. Provide an adjustable trip, 150 amp, 3-pole, shunt trip circuit breaker in a NEMA 1, flush mounted enclosure.

C.2.3.3 Single-Phase Rooms. If the room will receive single-phase X-ray equipment, provide 150 amp, 240 volt, single-phase (3-wire and ground) service to the room. Provide an adjustable trip, 100 amp, 2-pole, shunt trip circuit breaker in a NEMA 1, flush mounted enclosure.

C.2.3.4 Emergency Shutdown. Provide a large, clearly identified push-button to actuate the shunt trip circuit breakers, and disconnect all power to the X-ray machine and accessories.

C.2.3.5 120/208 Volt Auxiliary Panelboard. If required by using Military Department, provide a 120/208 volt, single-phase, 100 amp panelboard with a 50 amp shunt trip main breaker to support the single-phase loads in each room. Provide a 20-pole-space panelboard with at least two 20 amp 2-pole circuit breakers, and five 20 amp 1-pole circuit breakers. This panelboard may be served from the nearest general purpose 120/208V transformer; a dedicated stepdown transformer may be provided and fed from the 480V service in 3-phase rooms. (Calculations should be based on 180 amp maximum demand for 3-phase rooms, and 300 amp maximum demand for single-phase rooms.)

C.2.3.6 Voltage Drop and Regulation. Total voltage drop in a branch circuit and feeder conductors must not exceed 2 percent from the facility distribution transformer to the X-ray rooms. Total voltage regulation of the distribution transformer, feeder, and branch circuit conductors must not exceed 5%. For circuits which serve only one room, calculations should be based on the maximum demand current of the single X-ray generator. For circuits which serve more than one room, calculation should be based on the maximum demand current of the two largest rooms. (Calculations should be based on 180 amp maximum demand for 3-phase rooms and 300 amp maximum demand for single-phase rooms.)

C.2.3.7 Distribution Transformers. Distribution transformers should not be dedicated solely to X-ray equipment. The voltage regulation is better if X-ray machines are connected to transformers which are partially loaded with other equipment. X-ray machines should always be connected line-to-line, never line-to-neutral.

C.2.3.8 Essential Power. Essential power for X-ray equipment, illumination, and duplex receptacles shall be in accordance with the using Military Department guidance documents.

C.2.4 Warning Lights, Interlocks, and Illumination. Warning lights, interlocks, and illumination are to be provided in accordance with the Design Agent's guidance documents.

C.2.5 Structural Requirements.

C.2.5.1 Walls. Provide studs on either side of the vertical electrical raceways. Design walls to support 100 kg (220 pounds) vertical-to-horizontal pull. Double walls must be provided between adjacent x-ray rooms.

C.2.5.2 Ceiling Support System. Provide an overhead tube-mount support system in accordance with Figure C-3 with a load bearing capacity of 408 kg (900 pounds) vertical point load and 23 kg (50 pounds) per square foot uniformly distributed load. Spanning members should be mounted perpendicular to the centerline of the X-ray table and

positioned at 650 mm (25-5/8) inches on center to provide 600 mm (2 feet) clear between members. The acoustical ceiling tiles are to be suspended from the structural grid. Bottom of members should be flush with the finished ceiling.

C.2.6 Case Work.

C.2.6.1 Case work shall be as specified by the using Military Department.

C.2.6.2 A hand sink with hot and cold water and drain will be provided.

C.2.7 Radiology Shielding.

C.2.7.1 As a minimum:

a) Comply with the design requirements of NCRP Report No.49 (reference C-b), and certify as advised by NCRP Report No.102 (reference C-c.) and by the using Military Department Procedures.

b) Lead shielding shall be 3 mm (1/16 inch) lead or lead equivalent up to 2100 mm (7 feet) above the finished floor. Penetrations through the shielding should be avoided.

c) Where possible, lead shielding shall be applied to exterior side of wall partitions, i.e., laminated behind gypsum board for protection.

C.2.7.2 Use of modular shielding for operator's booth is permitted.

C.2.7.3 All ductwork, grilles, registers, and diffusers shall be located at a height higher than 2100 mm (7 feet) clear above the finished floor. Thermostat transmission lines shall be routed to avoid penetration of shielding.

REFERENCES

C-a. Underwriters Laboratories (UL), Electrical Construction Materials Directory, (current edition).

C-b. National Council on Radiation Protection and Measurements (NCRP), Report No.49, "Structural Shielding Design and Evaluation for Medical Use of X Rays and Gamma Rays of Energies Up to 10 Mev (1976)." NCRP Publications, 7910 Woodmont Avenue, Suite 1016, Bethesda, MD 20814.

C-c. National Council on Radiation Protection and Measurements (NCRP), Report No. 102, "Medical X-Ray, Electron Beam and Gamma-Ray Protection For Energies Up to 50 Mev (Equipment Design, Performance and Use) (1989)." NCRP Publications, 7910 Woodmont Avenue, Suite 1016, Bethesda, MD 20814.

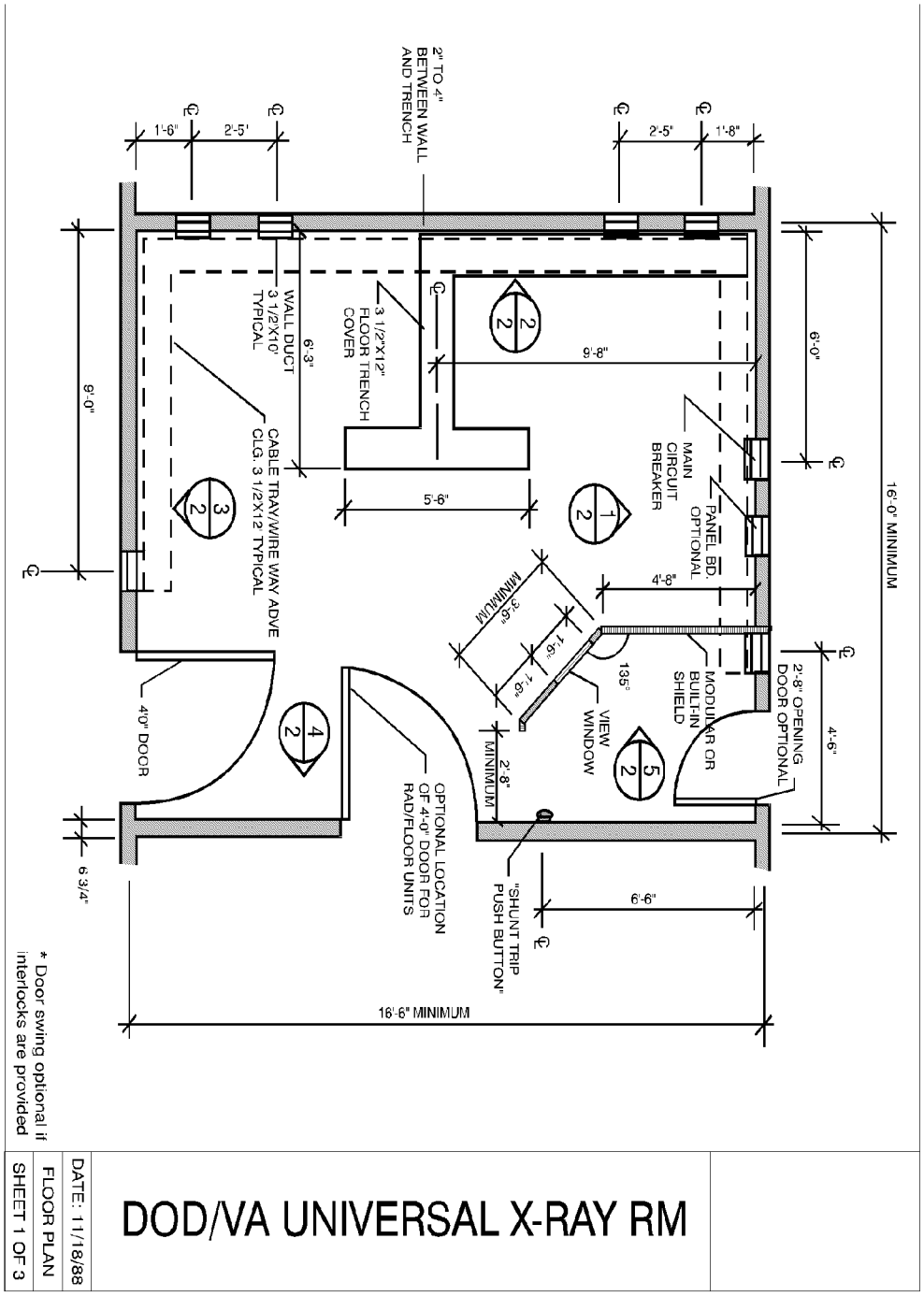
16'-0" MINIMUM
6'-0"
2'-8" OPENING
DOOR OPTIONAL
4'-6"
MODULAR OR
BUILT-IN
SHIELD
PANEL BD.
OPTIONAL
MAIN
CIRCUIT
BREAKER
9'-8"
2'-5'
1'-8"
2" TO 4"
BETWEEN WALL
AND TRENCH
1'-6"
2'-5'
3 1/2"X12"
FLOOR TRENCH
COVER
WALL DUCT
3 1/2"X10'
TYPICAL
6'-3"
9'-0"
CABLE TRAY/WIRE WAY ADVE
CLG. 3 1/2"X12" TYPICAL
5'-6"
4'-8"
135°
VIEW
WINDOW
MINIMUM
3'-6"
1'-6"
1'-6"
2'-8"
MINIMUM
"SHUNT TRIP
PUSH BUTTON"
6'-6"
OPTIONAL LOCATION
OF 4'-0" DOOR FOR
RAD/FLOOR UNITS
4'0" DOOR
6 3/4"
16'-6" MINIMUM
* Door swing optional if
interlocks are provided
DOD/VA UNIVERSAL X-RAY RM
DATE: 11/18/88
FLOOR PLAN
SHEET 1 OF 3

FIGURE C-1

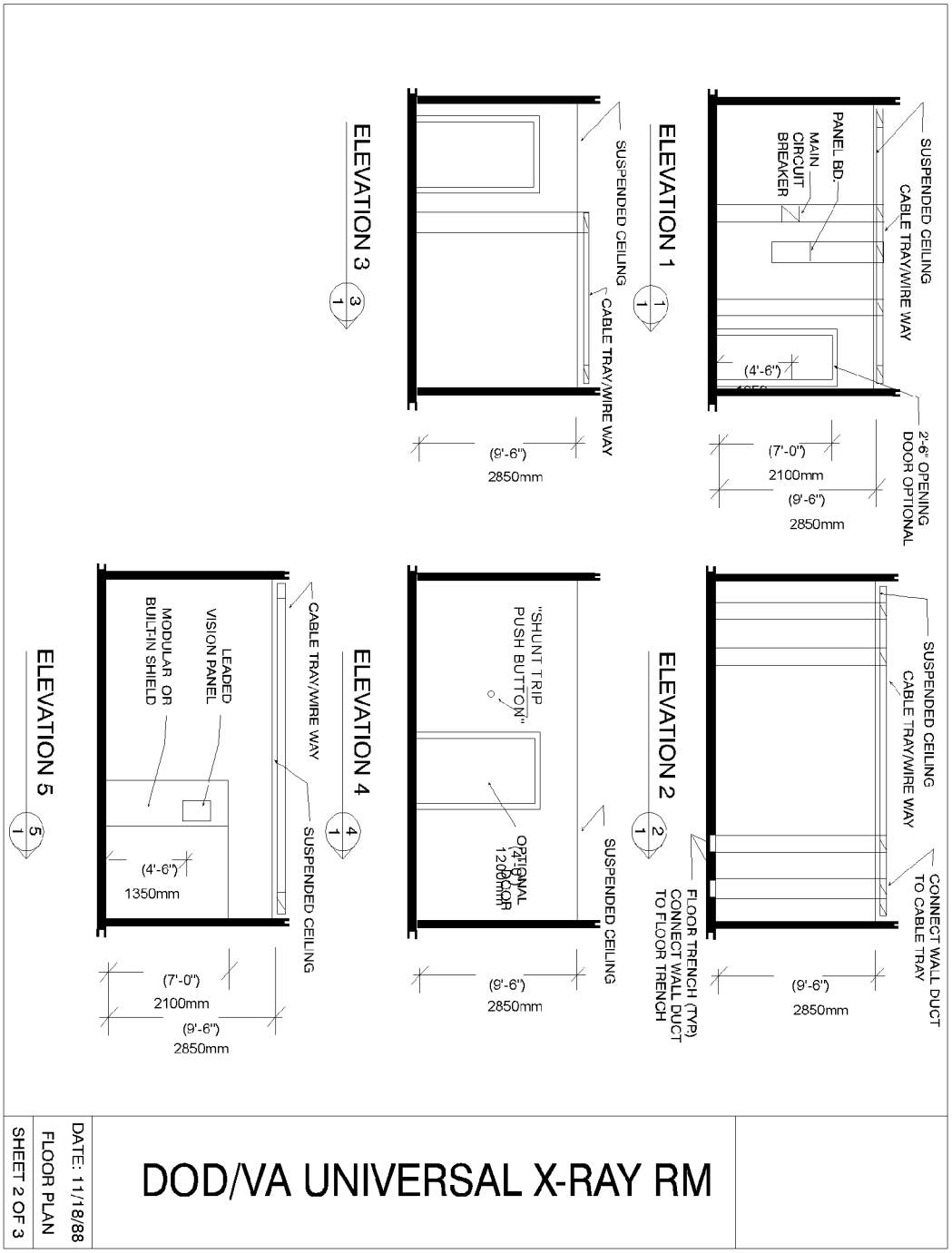
SUSPENDED CEILING
CABLE TRAY/WIRE WAY
PANEL BD.
MAIN CIRCUIT BREAKER
(4'-6")
2'-6" OPENING DOOR OPTIONAL
(7'-0")
2100mm
(9'-6")
2850mm
ELEVATION 1
1
1
SUSPENDED CEILING
CABLE TRAY/WIRE WAY
(9'-6")
2850mm
ELEVATION 3
3
1
SUSPENDED CEILING
CABLE TRAY/WIRE WAY
CONNECT WALL DUCT TO CABLE TRAY
FLOOR TRENCH (TYP) CONNECT WALL DUCT TO FLOOR TRENCH
(9'-6")
2850mm
ELEVATION 2
2
1
SUSPENDED CEILING
"SHUNT TRIP PUSH BUTTON"
OPTIONAL 1200mm FLOOR
(9'-6")
2850mm
ELEVATION 4
4
1
CABLE TRAY/WIRE WAY
SUSPENDED CEILING
LEADED VISION PANEL
MODULAR OR BUILT-IN SHIELD
(4'-6")
1350mm
(7'-0")
2100mm
(9'-6")
2850mm
ELEVATION 5
5
1
DOD/VA UNIVERSAL X-RAY RM
DATE: 11/18/88
FLOOR PLAN
SHEET 2 OF 3

FIGURE C-2

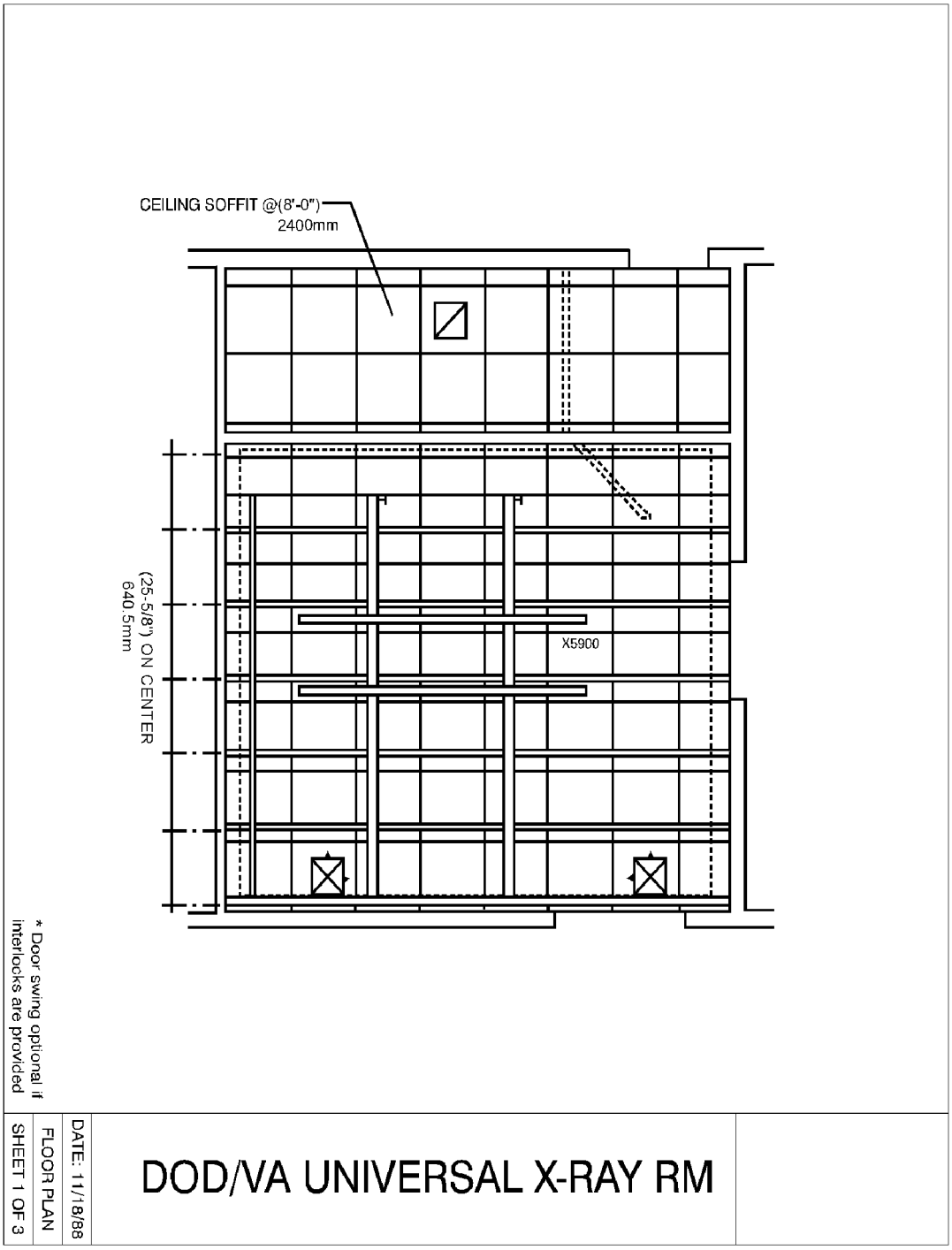
CEILING SOFFIT @(8'-0")
2400mm
(25-5/8") ON CENTER
640.5mm
X5900
* Door swing optional if interlocks are provided
DOD/VA UNIVERSAL X-RAY RM
DATE: 11/18/88
FLOOR PLAN
SHEET 1 OF 3

FIGURE C-3

APPENDIX D: UFAS INTERPRETATIONS AND WAIVERS

D.1 This appendix provides information on written interpretations which have been issued by the Architectural and Transportation Barriers Compliance Board (ATBCB). Waivers which have been issued by ASD(FM&P) are also provided. Figure D-7 is a waiver that was issued by ASD(FM&P).

D.2 INTERPRETATIONS. The following information has been provided by the Architectural and Transportation Barriers Compliance Board and should be referenced in the following occupancies:

Mercantile (try-on and fitting rooms)
Health Care (x-ray or exam rooms)
Recreational (in association with showers in swimming pools, gymnasiums, etc.)
Educational (e.g. - if provided at athletic facilities or home-ec classrooms)

D.2.1 DRESSING ROOMS. In new construction, where dressing rooms are provided for use by the general public, patients, customers, or employees all shall be located on an accessible route. In existing construction, where structural impracticability can be demonstrated, one dressing room for each sex on each accessible floor/level shall be made accessible.

D.2.1.1 Clear Floor Space. A clear floor space allowing a person using a wheelchair to make a 180-degree turn shall be provided in every dressing room entered through a swinging or sliding door. No door shall swing into any part of the turning space. Turning space shall not be required in a private dressing room entered through a curtained opening at least 32" wide if clear floor space complying with section "Space Allowance and Reach Ranges" renders the dressing room usable by a person using a wheelchair.

D.2.1.2 Doors. All doors shall be in compliance with section "Doors".

D.2.1.3 Bench. Every dressing room shall have a 24"(min) by 48"(min) bench fixed to the wall along the longer dimension of the bench and not necessarily the room. The bench shall be mounted 17" to 19" above the floor and may be hinged. Clear floor spaces shall be provided alongside the bench to allow a person using a wheelchair to make a parallel transfer onto the bench. The structural strength of the bench and attachments shall comply with section "Structural Strength". Where installed in conjunction with showers, swimming pools, or other wet locations, water shall not accumulate upon the surface of the bench and the bench shall have a slip-resistant surface.

D.2.1.4 Mirror. A full-length mirror, measuring at least 18" wide by 54" high, shall be mounted in a position affording a view to a person on the bench as well as to a person in a standing position.

D.2.1.5 Rationale. Both UFAS and MGRAD are silent re dressing rooms. We have many requests for information & assistance in applying existing standards but none seems to be entirely appropriate. Since usability is a requirement and since many persons using wheelchairs must dress/undress in a semi-recumbent position, the need for a bench is clearly demonstrated. Other requirements are derived from known space and reach dimensions.

(Note: This is an ATBCB proposal for insertion into UFAS based on their interpretation of minimum accessibility requirements for functional use of dressing rooms. This has subsequently been provided for adoption by the Americans with Disabilities Act.)

Figures D-1 and D-2 are provided for further information.

D.3 DMFO QUESTIONS AND ANSWERS. The Defense Medical Facilities Office prepared a series of questions relative to UFAS and forwarded them to the ATBCB for interpretations. The numbers listed in the Reference column relate to paragraphs and pages in Fed-Std-795, "Uniform Federal Accessibility Standards." Answers to the questions are indicated in **bold** type.

REFERENCE		COMMENT/QUESTION
D.3.1	3.5, p3	A definition is needed for clear floor space. The definition should be explicit, especially with regard to wall hung items which may be allowed to overlap this space, such as a lavatory. **You may use the definitions in 4.2.4.1 and 4.2.4.2, part of which allows knee space "under some objects" to be part of clear space - under a lav this would be 29"h x 30"w x 19" max per 4.19.3.**
D.3.2	4.1.2(4),& 4.1.2(5), p5 4.3.8, p19 4.9, p27	There appears to be a contradiction between these sections. Section 4.3.8 states that stairs shall not be part of an accessible route. Sections 4.1.2(4) and 4.9 appear to indicate that stairs are a part of an accessible route if they connect levels which are not connected by an elevator, or other states requirements per section 4.1. This needs to be clarified. **This is an inconsistency in UFAS terminology which we hope will be addressed as the standard setting agencies revise UFAS. Stairs, though not accessible to a person using a wheelchair, are indeed usable by people with certain disabilities and in some instances, are preferred over a ramp. It is my personal opinion that the UFAS provisions are so helpful they should be applied to**

		<u>all</u> stairs in newly constructed buildings and facilities.
D.3.3	4.1.4(9)(b), p10	This states that all common use toilet facilities shall be accessible. If an accessible toilet room is placed at the entry to a public toilet, does this satisfy this requirement even though the remainder of the toilet is not accessible? See example plan in Figure D-3. **The example plan does <u>not</u> meet the requirements for new construction, however, in some alterations the proposed arrangement may be regarded as fulfilling the requirements.**
D.3.4	4.1.4(9)(b), p10	This section requires 10% of patient bedrooms and toilets to be accessible to the handicapped. Many general hospitals have several types of wards or bed categories (i.e., ICU, Pediatrics, OB-GYN and Isolation). Does this section require a minimum of 10% of each category of bed to be accessible to the handicapped? **Yes**
D.3.5	4.2.3, p14	In health care facilities, does this standard require the referenced wheelchair turning space in any functional space other than toilets (4.22.3), bathrooms (4.23.3), and patient bedrooms (6.3(1))? **When "usability" of the room or space requires a person using a wheelchair to make a turn, the turning space is required.**
D.3.6	4.10.13,p32	This section states that sound level of audible signals of elevators shall be no less than 20 decibels. Should the sound level be specified to be less than 20 decibels above the prevailing ambient noise level of the space? **This paragraph covers only the sound level of the car position indicator <u>inside</u> the car and sets the <u>minimum</u> level only without**

		regard for the ambient noise level (which may be assumed to be dependent on the number of people in the car as well as machine sound). (Note: This item is currently under review by the ATBCB to determine the appropriate sound level.)
D.3.7	4.13.5,p33 4.13.6 4.13.11,p36	The life safety code (NFPA 101 5-2.1.4.1) does not allow doors other than side-hinged, swinging doors to be used for egress purposes. A note needs to be placed on such illustrations stating that these doors shall be used for only rooms or spaces which are not normally occupied (i.e., storage rooms, dressing booth, or single-person toilet rooms). **You are correct regarding the LSC requirements about egress in a hospital. Nothing is UFAS conflicts with LSC provisions and such a caveat has no place in the legal requirements of UFAS (but it would be a useful item in an explanatory "handbook") for UFAS is applied to many occupancy types where such doors would be permitted in occupied spaces by NFPA 101 or other building codes.**
D.3.8	4.13.7,p36	Two doors in series: Is it the intent of this section to apply to "vestibules" only, where the passage through both doors is always expected? **No.** Conversely, can we assume this section is not expected to apply to a room that has two entry doors that just happen to be in line with each other? See Figure D-4. **In a room where two entry doors line up, I believe that a clear floor space 48" long (as in Fig 26) must be provided so that one door is allowed to close fully before the person must maneuver to open the opposing door.**

D.3.9	4.13.7,p36	If the answer to previous question is no, delete this question. Would an ante room to an isolation room be allowed to have two doors in line, provided the following conditions are met? a. The approach requirements or maneuvering clearances of each door considered independent of the other door comply with Figure 25. b. There is a clear turn-around space that complies with Figure 3 in both the ante-room and the isolation room. See Figure D-4.
D.3.10	4.13.7,p36	If two doors in series are located in walls perpendicular to each other, is a minimum clear distance of 48 inches required? See example plans in Figure D-5. **Yes.**
D.3.11	4.16.2 & 4.16.4,p38	There is a conflict between the 36" grab bar dimension and the 36" minimum dimension for lavatory placement. Is a smaller grab bar dimension permitted? **No. The drawings in Fig. 28 appear inconsistent with the technical provisions. However, nowhere in the text is a shorter grab bar deemed acceptable. Since space must be allowed to accommodate the returns and escutcheons of the 36" grab bar, we recommend a minimum space of 39" to the edge of the lav. One must recognize also that this allowable arrangement does not permit a side transfer, only a diagonal transfer to the water closet from a wheelchair.**
D.3.12	4.16.6,p38	What is the maximum height allowed for a toilet paper dispenser? **Not addressed, other than the 19" minimum.**

Also, is there a minimum and maximum distance from the back wall?

The maximum distance to the front edge of the dispenser is 36" (Fig 30(d)). Care must be exercised in specifying multi-roll surface mounted or projected dispensers to be mounted so as not to interfere with the use of grab bars.

D.3.13 4.19.2,p40

Recommend that 34" maximum dimension be shown for sink rim height on Figure 32.

Recommendation is good. We will pass this along to the standard-setting agencies for consideration in future UFAS.

D.3.14 4.4.19.4,p40

For safety reasons in medical facilities, the water temperature to general use sinks, exam rooms, public toilets, baths, showers, treatment rooms, etc. is limited to a maximum temperature of 105 F, by DoD criteria. Is it the intent of these sections to require insulation on drains and hot water supplies when the maximum water temperature is 105 F?

Yes - because UFAS cannot regulate maintenance and operations.

In addition, what is the maximum and minimum temperature allowable for any exposed element?

Not addressed. If no hot water is supplied, insulation may be omitted.

(Note: The ATBCB has verbally stated that on lavatories, if you put an elbow directly under the drain, run the drain to the wall with a trap flat against the wall and outlet of the trap going into the wall, then insulation would not be required on the drain. Likewise, if hot and cold water supply pipes are stubbed through the wall just below the bottom of the sink and pipes go straight up

		to the faucet, then insulation would not be required.)
D.3.15	4.21.2, p42	Are the shower dimensions of shower 35(a) to be strictly complied with? **Yes.** Can a flexible length such as 36" to 40" for each dimension be allowed? **No. Once a person has transferred from a wheelchair to the seat, he must be able to reach the controls and grab bar without leaning forward.**
D.3.16	4.21.2, p42	Are the shower dimensions of shower 35(b) to be strictly complied with? Is a flexible width of 30" to 36" and a flexible length of 60" to 66" acceptable? **A 36" width is actually better. Figure 35(b) dimension of "60" should read "60 minimum".**
D.3.17	4.21.2, p42	Refer to Fig 35(b): Is the 36" x 60" clear space valid? Could the 60" dimension be reduced, since a sink is shown in the clear area? **No. The sink must provide knee space as specified in Figure 31 to allow use of the clear floor space.**
D.3.18	4.21.4, p42	Length of grab bar needs to be specified for control side of 36" x 36" shower. **Yes, this should be clarified. Please note that the plan and elevations indicate the grab bar continues around the corner.**
D.3.19	4.21.4, p42	Length of grab bar needs to be specified for side and control wall of 30" x 60" shower. **Yes, this should be clarified. Plan and elevations show grab bar as continuous around 3 sides so lengths would be dependent on actual size of shower.**
D.3.20	4.21.2	Placement of shower spray unit

	4.21.4, p42	needs to be clarified for 30" x 60" shower unit. Figure 35(b) shows spray unit along back wall at a minimum of 27" from side wall. Figure 37(b) shows spray unit on control side of wall at 18" from entry side (or 12" from back wall). Are both configurations acceptable? **Yes, we believe so.**
D.3.21	4.21.6 4.21.6, p42	Is there a required height for mounting of spray unit in "fixed" position? **It must be within the front reach range, 48" maximum.**
D.3.22	4.21.7, p43	Drawings of shower stalls in Figure 37 should be revised to delete high curbs. **We are aware of this inconsistency. (Thanks for noticing.)**
D.3.23	4.23.3, p44	If there is a shower with no curb nor any other obstructions such as shower doors, is it allowable to have a turning space or clear space of another fixture in a single use toilet overlap the shower area? See example in Figure D-6. **Figure D-6 does not include the required 36" x 60" clear floor space at the shower. If it did, there would also be sufficient clear floor space for the lav without encroaching on the shower.**
D.3.24.	4.28.3, p45	A frequency of 5 Hertz for flashing lights appears too fast. Is this value correct for the fast flashing frequency? Also, a minimum frequency should be specified. **Current research recommends using a clear xenon flash tube, high intensity strobe light with an intensity of 75 to 120 candela-seconds and a flash rate of 1 to 3 Hertz.**
D.3.25.	4.29.3 4.29.4, p47	Is it the intent of these sections, that any stairs which

are a part of any accessible path or required emergency exit shall have no tactile warning on doors or floors?

Tactile warnings are required on doors to <u>hazardous</u> areas. An exit stair is a route to safety and the door to a stair should not be marked as a hazard. The tactile warning section at stairs (even though stairs are not part of an accessible route) has been "reserved", pending further research. ANSI A117.1 does call for detectable warning at the top of stairs. Such installation would not be prohibited by UFAS and may, in the case of an open stair, actually enhance safety.

D.3.26 4.30.5, p47

Section 4.1.1(7) requires display of international symbol for parking spaces, loading zones, entrances, toilets and baths which are accessible. Are there any other sections that dictate a requirement for having signage?

Yes. 4.1.2(15). It is the intent that all signs conform to 4.30.2 and 4.30.3, while permanent identification of rooms and spaces should be tactile and mounted as specified in 4.30.4 and 4.30.6. Incised letters will no longer be permitted when standard-setting agencies revise UFAS. If signs are altered, they must comply with these provisions for new construction. "Permanent identification" includes room numbers, exit stairs, restrooms, etc. not occupants names.

D.3.27 4.30.4, p47

Rooms in hospitals are frequently changed, and signage is often designed for flexibility. Many signage systems have only a room number which is a permanent portion of a sign. The room function and/or person's name is on an "interchangeable strip or insert plate". Are signs with raised room numbers only acceptable?

Yes.

Signs for toilets, parking spaces, etc., as required by 4.1.1(7) would be provided as completely permanent signs.

Yes.

The following comments or questions will all have UFAS Section 6, page 57 as their reference:

D.3.28

Dressing booth criteria for health care facilities needs to be developed, similar to criteria for toilet rooms. Criteria should include minimum clear space for turnaround, grab bar requirements, bench requirements, etc.

Agree.

D.3.29

Are all dressing booths at a bank of dressing rooms required to be accessible?

Yes. In new construction, they are considered to be "common use" areas.

D.3.30

Are all specimen toilets at a bank of specimen toilets required to be accessible?

Yes. In new construction, they are considered to be "common use" areas.

D.3.31

Does this standard intend to waive accessibility requirements for specialized medical equipments and/or their installations for such equipment as follows: fume hoods; sterilizers; cart washers; incinerators; IV poles; X-ray equipment; Medi-Prep station; surgical columns; hyperbaric medicine chambers; scrub sinks; nourishment stations; vault doors; photo-processing equipment.

UFAS does not apply to equipment.

D.3.32

Is it the intent of this standard not to require full accessibility with a turnaround space in the following spaces:

flammable storage (50)
equipment Storage (50)
barium prep (70)
soiled linen (60)
clean utility rooms (60)
sterile storage (60)
lab incubation room (70) forms storage (50)
anesthesia gas storage (50)
baggage storage (40)
trash collection (60) acid storage (40)
plaster prep storage (50) gas storage (40)
chemical mix/storage (30)
parts storage (80)
work rooms - nursery (50)
vaults (40)
music/paging controls (50)
scrub areas (50)
radium sealed source rm (60)
injection room (50)

(Note: The numbers in parenthesis indicate the net square footage that has been traditionally assigned to these functions.)

Depends on actual use and whether these spaces are restricted to use by able-bodied military personnel only. It is recommended that accessibility be provided wherever possible because the use of the room or space may change over time.

D.3.34 Projection rooms are approximately 200 square feet and may be one level above the auditorium floor. Is it the intent of this standard to require an elevator for accessibility to this space, if this is the only space served?

Must be reviewed individually. If opportunity exists, accessibility should be provided. If not, perhaps the situation warrants a waiver application.

D.3.35 Computer rooms in medical facilities may be sized as small as 100 to 200 square feet. Is it the intent of this standard to require ramps and/or lifts for accessibility to this space?

Absolutely.

D.3.36

Revolving, "light-proof" doors are used for X-ray film processing spaces. Is it the intent of this standard that darkrooms are accessible spaces? If yes, must the use of revolving doors be discontinued?

In new construction, other options are available and should be selected. An existing revolving door in an existing building may have to be altered as a consequence of a 504 complaint/action.

D.3.37

Is it the intent of this standard to make control wall configurations accessible within X-ray rooms?

In new construction, there should be little difficulty in providing accessibility to the X-ray control wall.

FIGURE D-1

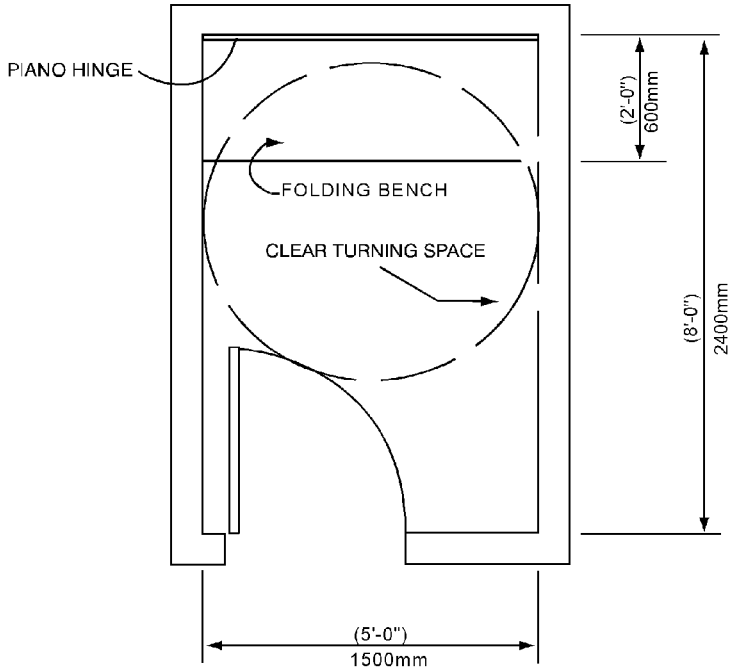

DRESSING ROOM

40 NSF

FIGURE D-2

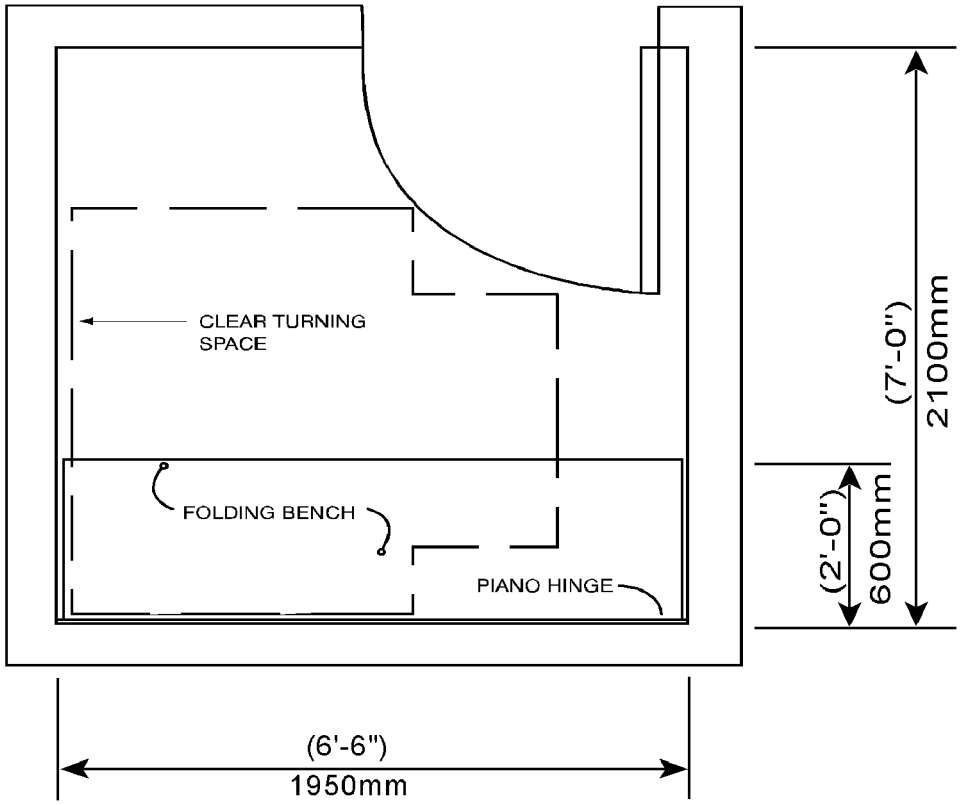

DRESSING ROOM

40 NSF

FIGURE D-2

FIGURE D-3

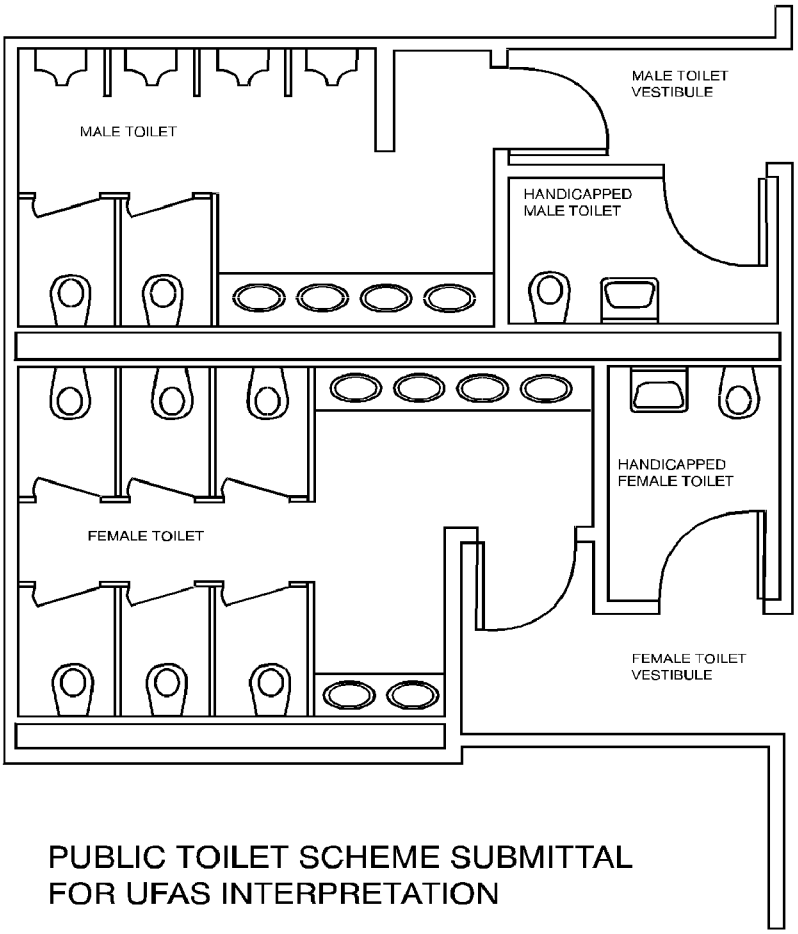

PUBLIC TOILET SCHEME SUBMITTAL
FOR UFAS INTERPRETATION

FIGURE D-3

FIGURE D-4

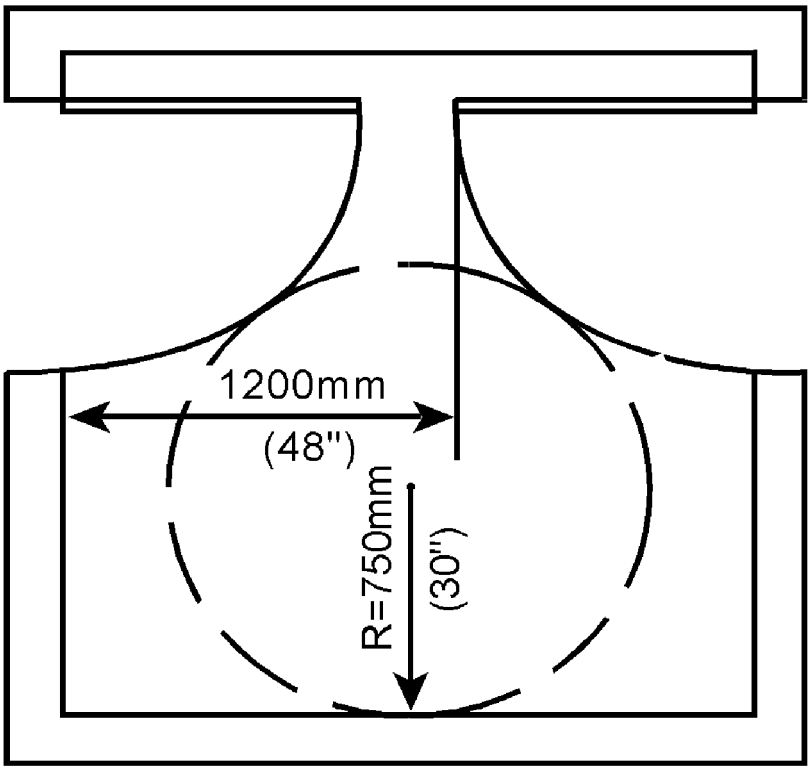

FIGURE D-4

FIGURE D-5

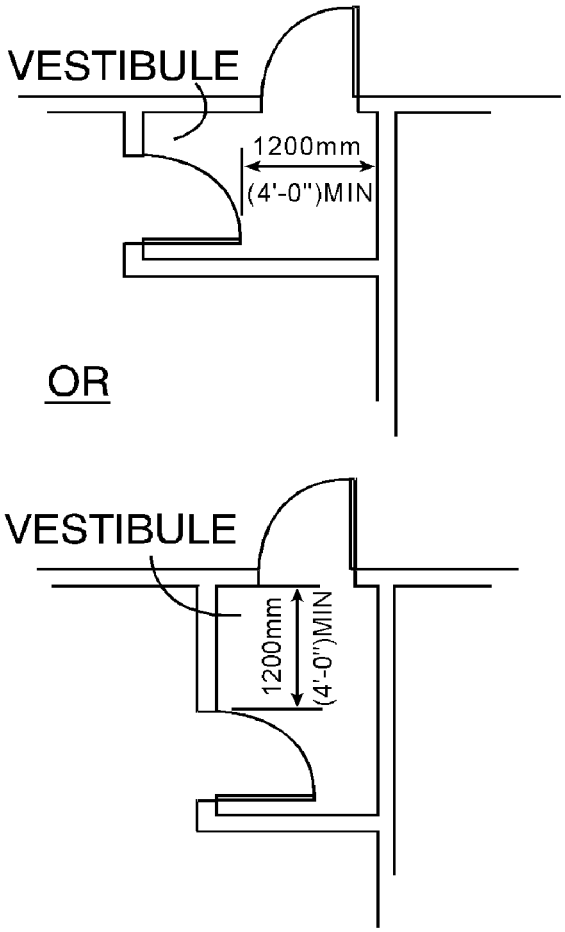

TWO HINGED DOORS IN SERIES SUBMITTAL FOR UFAS INTERPRETATION

FIGURE D-5

FIGURE D-6

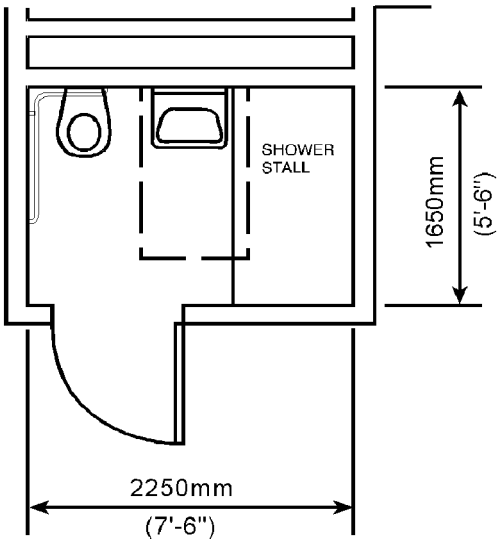

BATHROOM SCHEME SUBMITTAL
FOR UFAS INTERPRETATION

NOTE: CLEAR FLOOR SPACE OF SINK OVERLAPS SHOWER STALL, WHICH HAS NO CURB

FIGURE D-6

ASSISTANT SECRETARY OF DEFENSE

WASHINGTON, D. C. 20301-4000

MAY 22 1992

FORCE MANAGEMENT
AND PERSONNEL

MEMORANDUM FOR ASSISTANT SECRETARY OF DEFENSE (HEALTH AFFAIRS)

SUBJECT: Waivers and Modifications of Accessibility Standards for Psychiatric Ward at Portsmouth Naval Hospital

This responds to your memorandum requesting waivers and modifications of accessibility standards to protect life safety in a psychiatric ward.

The following provisions of the Uniform Federal Accessibility Standards are hereby waived for the psychiatric ward at Portmouth Naval Hospital:

§ 4.16.4--grab bars for water closets
§ 4.17.6--grab bars for water closets
§ 4.20.4--grab bars for bathtubs
§ 4.20.6--shower spray unit for bathtubs
§ 4.21.4--grab bars for showers
§ 4.21.6--shower spray unit for showers

These standards are being waived because of the need to take special precautions in design and construction to prevent psychiatric patients from harming themselves or other people. Grab bars and protruding shower heads give patients means to commit suicide by hanging. A hose or hand-held shower unit can be used for hanging or strangulation or as a weapon. These features therefore are not required in the psychiatric ward.

Similarly, because lavatories can be removed from the wall and used as weapons, vandal-proof lavatories are desirable in psychiatric wards. The typical vandal-proof lavatory is 14 inches wide, 12 inches deep, and 10 inches high. The typical accessible lavatory is 20 inches wide, 18 inches high, and 6 inches high. Accordingly, the following modification of § 4.19.2(M) is authorized for the psychiatric ward at Portsmouth Naval Hospital:

4.19.2(M) Height and Clearances. Vandal-proof (prison-style) lavatories shall be mounted so that 50 percent comply with Figure 31(b) and 50 percent with Figure 31(c).

The lavatories in Figure 31(b) shall be mounted with rim or

counter surface no higher than 38 inches (965 mm) above the

finished floor. Provide a minimum knee clearance of 27 inches (685 mm) below the lavatory. The lavatory shall project a minumum of 12 inches (305 mm) from the wall.

The lavatories in Figure 31 (c) shall be mounted with rim or counter surface no higher than 34 inches (865 mm) above the

finished floor. Provide a minimum knee clearance of 23 inches (585 mm) below the lavatory. The lavatory shall project a minimum of 12 inches (305 mm) from the wall.

FIGURE D-7

Figures 31 (b) and (c) are attached. The rationale for using two different configurations in combination is that one facilitates a side reach from a wheelchair, while the other facilitates a forward reach.

Because modification of the standards for lavatory heights also affects mirror heights, the following modification of § 4.19. is authorized for the psychiatric ward at Portsmouth Naval Hospital:

§ 4.19.6 Mirrors. When lavatories are mounted as shown in

Figure 31(b), mirrors shall be mounted with the bottom edge

of the reflecting surface no higher than 40 inches (1015 mm) from the floor.

Any questions may be directed to Ms. Judith C. Gilliom of my staff at (703) 697-8661 or AUTOVON 227-8661.

Christopher Jehn

Attachments:
As stated

FIGURE D-7

FIGURE D-7

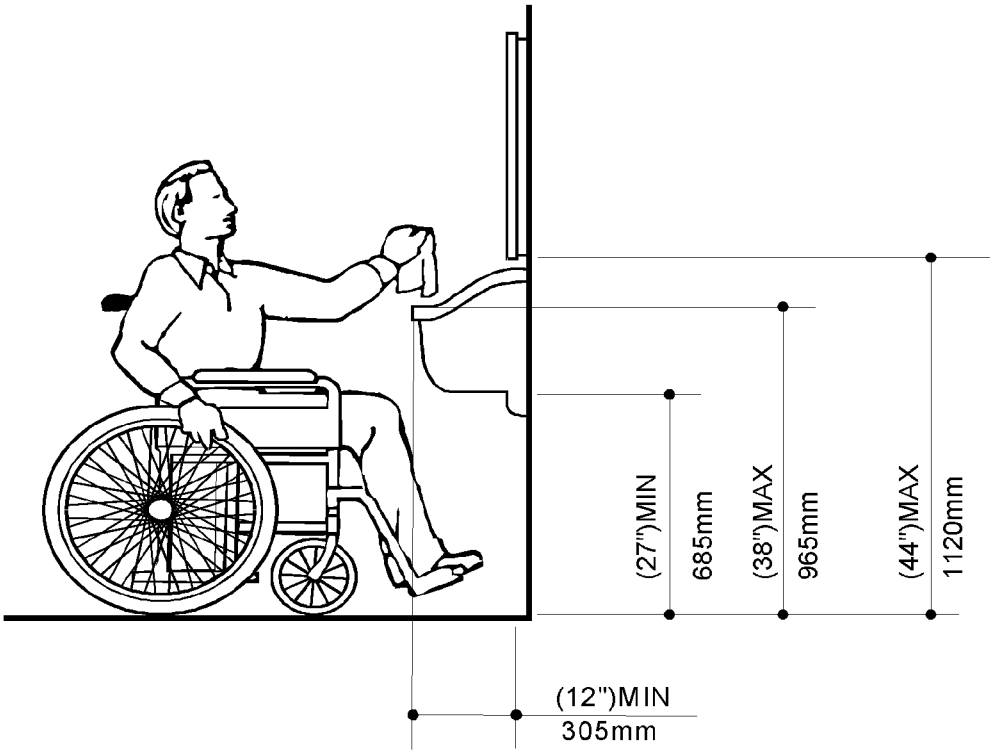

Fig. 31 (b)
Lavatory Clearances

FIGURE D-7

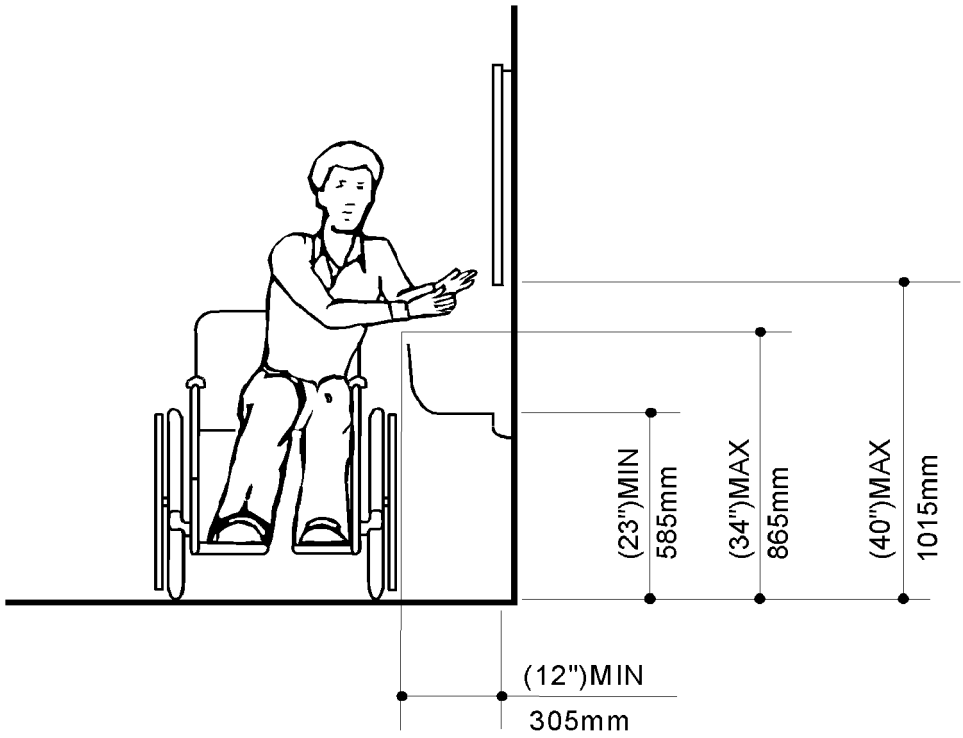

Fig. 31 (c)
Lavatory Clearances

GLOSSARY OF TERMS, ABBREVIATIONS, AND ACRONYMS

AAFES. Army and Air Force Exchange Service.

Automatic Box Conveyor (ABC); also known as Electric Track Vehicle (ETV) or Powered Track Tote Box Conveyor System (PMTCS): A rail system utilizing self contained buss bars to provide power to special carriers that contain and move small supply, demand and other items between stations on the track network.

ACD. Automatic Call Distribution--telephone system.

ACGIH. American Conference of Governmental and Industrial Hygienists.

ACI. American Concrete Institute.

ADAAG. Americans with Disabilities Act Accessibility Guidelines.

ADL. Area Dental Laboratory. Regionalized laboratory for the preparation of dental bridgework, prosthesis, and prosthodontic devices too sophisticated and complex to be accomplished at the installation level.

ADP. Automated Data Processing. Any equipment that is used in the automatic acquisition, storage, manipulation, management, movement, control, display, switching, interchange, transmission or reception of data information.

ADPE. Automatic Data Processing Equipment. General purpose, commercially available automatic data processing equipment, and the systems created by them.

ADPS. Automated Data Processing System. The personnel, facilities, computer, and its associated storage, controlling, and output devices used in ADP.

ADS. Automated Data System. An assembly of procedures, processes, methods, routines, or techniques united by regulated interaction to form an organized whole and specifically designed to make use of ADPE.

Aeromedical Staging Facility (ASF). A medical facility which has aeromedical staging beds, located on or in the vicinity of an enplaning or deplaning air base or air strip that provides reception, administration, processing, ground transportation, feeding, and limited medical care for patients entering or leaving an aeromedical evacuation system.

AET. Annual Energy Target.

AFM. Air Force Manual.

AFCEE/CMM. Air Force Center For Environmental Excellence.

AFMSA/SGSF. HQ U.S. Air Force Surgeon General-Support-Facilities. The Office of Primary Responsibility (OPR), and the designated using Military Department representative of the U.S. Air Force Surgeon General for all policy, criteria decisions, and medical functional input regarding design and construction of U.S. Air Force medical projects worldwide. Focal point for coordination of programming and planning

activities between DMFO and the using activity(ies) on the Air Force medical MILCON Program.

AFR. Air Force Regulation.

AHERA. Asbestos Hazard Emergency Response Act. 40 CFR 763.

AICUZ. Air Installation Compatible Use Zone.

AIDS. Acquired Immunodeficiency Syndrome.

Air Handling Unit. An air conditioning unit consisting of fan(s), coil(s), filter(s), and other components designed and sized for supplying conditioned air to a given area or space(s).

AISC. American Institute of Steel Construction.

AISI. American Iron and Steel Institute.

Alteration. Spaces within an existing structure requiring some level of modification to bring the space into compliance with code(s), regulations, or functional requirements. (See section 1).

Alternate Power Source. One or more generator sets, or battery systems where permitted, intended to provide power during the interruption of the normal electrical service; or the public utility electrical service intended to provide power during interruption of service normally provided by the generating facilities on the premises.

Ambulatory. Able to walk; not confined to bed.

Ambulatory Care Clinic. An entity or unit of a medical or dental treatment facility that is organized and staffed to provide healthcare and holds regular hours in a designated place.

Ambulatory Health Care Center. A building or part thereof used to provide services or treatment to four or more patients at the same time and meeting either (a) or (b) below. Ambulatory health care centers exhibit some of the occupancy characteristics of business occupancies and some of the characteristics of health care facilities. Ambulatory care medical clinics and similar facilities that are contiguous to health care occupancies but are primarily intended to provide outpatient services may be classified as ambulatory care occupancy provided the facilities are separated from health care occupancies by not less than 2-hour fire-resistive construction.

a) Those facilities that provide, on an outpatient basis, treatment for patients that would render them incapable of taking action for self- preservation under emergency conditions without assistance from others, such as hemodialysis units or freestanding emergency medical units.

b) Those facilities that provide on an outpatient basis surgical treatment requiring general anesthesia.

Ampacity. Current-carrying capacity of electric conductors expressed in amperes.

Ancillary. Subsidiary, subordinate, auxiliary, or supplementary.

Anesthesia. Partial or complete loss of sensation, with or without consciousness, as a result of drug, disease, or injury.

Anesthetic. Applies to any inhalation agent used to produce relative analgesia or general anesthesia.

Anesthetizing Location. Any area of the facility that has been designated to be used for the administration of any flammable or nonflammable inhalation anesthetic agents in the course of examination or treatment including the use of such agents for relative analgesia.

ANSI. American National Standards Institute.

Antisepsis. The prevention of sepsis by exclusion or destruction of microorganisms.

Antiseptic. The prevention of decay, putrefaction or, sepsis through use of an agent that will prevent or arrest the development of microorganisms.

Antistatic. That class of materials that includes conductive materials.

Apparatus. Furniture, laboratory hoods, centrifuges, refrigerators, and commercial or man-made on-site equipment used in a laboratory. Appliance. Electrical equipment, generally other than industrial, normally built in standardized sizes or types, which is installed or connected as a unit to perform one or more functions.

AQCESS. Automated Quality of Care Evaluation Support System. An interactive, menu-driven patient administration and quality assurance computer system which provides inpatient facilities with the capability to collect, store, and retrieve data important for day to day management. The system is composed of four subsystems, three of which are functional (Admission and Disposition, Clinical Records, and Quality Assurance). These subsystems allow entry, updating, and display of data, as well as the production of reports for facilities and higher command.

Architect-Engineer (A-E or A/E) Firm. A business composed of professional architects and engineers.

Area of Refuge. An area protected from fire or smoke separated from all other spaces in the same building or an adjacent building that permits a delay in egress travel from any level.

ARI. Air Conditioning and Refrigeration Institute.

ARMS. Automated Review Management System.

Asbestos. A natural mined mineral which is a good thermal insulator, a good acoustical insulator, fire resistant, resistant to friction and wear, and a poor conductor of electricity. Known to cause lung cancer, mesothelioma, and other forms of cancer in the stomach and colon.

Asepsis. A condition free of germs or infection. Sterile.

ASHRAE. American Society of Heating, Refrigerating and Air Conditioning Engineers, Inc.

ASTM. 1) American Society of Testing and Materials.

2) American Standard Test Material.

ATBCB. Architectural and Transportation Barriers Compliance Board.

ATC. Air Transportable Clinic. Designed to provide limited medicine support/clinic service to an operational squadron of approximately 300-500 personnel at a limited or bare base. The assumption is that supporting hospital services will be nearby and/or aeromedical evacuation capability will be readily available. The ATC is intended to provide patient holding capability. The ATC is intended to provide interior care until the arrival of a follow-on tactical medical unit if duration of the operation warrants.

ATH. Air Transportable Hospital. This surgical/general hospital has 50 beds and one operating room (two operating tables) which provide resuscitative surgery and post-operative stabilization, medical and dental care for patients in accordance with evacuation policy for evacuation/return to duty within two to fourteen days. Its staff of general/orthopedic, surgical, and internal medical personnel can perform 12 major surgeries, and can accommodate a peak of 20 admissions and limited/definitive outpatient care for 50 patients each day. After patient evacuation, the unit can relocate and reestablish in 24 hours, excluding travel time. This unit is capable of all weather, combat zone operation and requires external support services.

Atmosphere. The pressure exerted by, and gaseous composition of, an environment.

Atrium. A floor opening or series of floor openings connecting two or more stories that is covered at the top of the series of openings and is used for purposes other than an enclosed stairway; elevator hoistway; escalator opening; or utility shaft used for plumbing, electrical, air conditioning, or communication facilities.

Authority Having Jurisdiction. The "authority having jurisdiction" is the organization, office, or individual responsible for "approving" equipment, an installation, or a procedure. For Department of Defense Medical and Dental Treatment Facilities, and the MIL-HDBK 1191, the authority having jurisdiction is the Defense Medical Facilities Office (DMFO). See also Governing Body.

AUTODIN. Automatic Digital Network. A worldwide DoD computerized general purpose communication system which provides for transmission of narrative and data pattern traffic.

Automated Guided Vehicle System (AGVS). Also known as "Driverless Vehicle System" (DVS): This system utilizes a battery powered, electronically controlled vehicle that follows a predetermined route (guide path or track that is buried in the floor or adhered to its surface) to move carts and material throughout the facility. The system utilizes the guide path network and special elevators to make the horizontal and vertical routings. Different degrees of automation and capabilities are available. The basic system components commonly found

in a hospital application include: Driverless Vehicles, Elevators, Carts (Modules), Guide path and controls, Cartwash(s), Battery charge equipment, etc.

Average Interval. The elapsed time in seconds between elevator departures from a terminal floor, averaged over a specific time period. Average interval is a measure of the "quality" of elevator service. Average interval can be measured in existing buildings but must be calculated for new buildings. For practical purposes it can also be viewed as the average round trip time of an elevator, divided by the number of elevators within the group in question. Average interval is not a direct measure of how long prospective passengers wait for service.

Average Maximum Ride Time (A.M.R.T). The amount of time a passenger is in an elevator from the point of origin to the destination is referred to as the "ride time".

Average System Response Time. The average time it takes for hall calls to be answered by an arriving car. This is an estimated or simulated factor for new facilities but can be measured for existing facilities.

Average Waiting Time. The average period that users wait for service. This is an estimated, or simulated factor. For example, if one person arrives at a lobby and initiates a hall call, and waits for 20 seconds for the car to arrive, while a second person arrives at the same time as the car, the average for these two persons being served is 10 seconds (20 seconds plus 0 seconds divided by two). Tests indicate that average passenger waiting time (AWT) for service at a typical intermediate floor approximates 65% to 80% of the average interval during heavy two-way traffic periods.

AWG. American Wire Gauge.

AUTOVON. Automatic Voice Only Network. Worldwide military telephone system.

Backflow Prevention. The use of a recognized device to prevent the backflow of water or other liquids, mixtures, or substances into the distributing pipes of the potable supply of water from any source such as a plumbing fixture or mechanical equipment.

BAS. Battalion Aid Station.

Base Isolation. This is a seismic construction element to prevent ground motion from being transmitted from the building foundation into the superstructure.

Basic Life Safety (Seismic). A seismic damage risk classification category and an operational level category. Facilities in this category meet the minimum requirements and objectives of seismic building codes--to provide a collapse resistant structure and thereby save lives. The life safety of the immediate building occupants is the sole objective of this category. Efforts to control damage due to earthquake in this category are minimum and limited primarily to the saving of human life. (See Section 6).

BDS. Battalion Dressing Station.

Bed Capacity. Number of beds that a hospital can accommodate. Beneficial Occupancy Date (BOD). The date on which a facility is available to serve the mission for which it is constructed.

Biomedical Equipment Maintenance Technician (BEMT or BMET). Responsible for inspecting, servicing, lubricating, adjusting, repairing, modifying, and replacing parts or assemblies and subassemblies of medical equipment.

BLAST. Building Loads Analysis and System ThermoDynamics. A computer programmed algorithm for calculating building heating and cooling loads, analyzing applications for HVAC systems, simulating system performance for determining energy consumption, and analyzing the life cycle cost of HVAC systems and energy conservation measures for determining cost effective selections and operational strategies.

BLAST/CB Protection. Refers to the sealing and pressurization, and decontamination of personnel and material(s) to preclude chemical-biological (CB) agents from entering a facility without compromising the CB protection or "shirt-sleeve" working environment within the facility.

BRAC. Base Realignment and Closure.

Branch Circuit. The circuit conductors between the final overcurrent device protecting the circuit and the outlets(s).

Btu. British Thermal Unit.

Btuh. British Thermal Unit per Hour.

Budget Fiscal Year. The next consecutive fiscal year following the current fiscal year. The year following the budget fiscal year appears as the first year in the proposed Six-Year Military Construction Program.

Built-in Equipment. That equipment which is affixed to the facility and usually included in the construction contract.

Bulk Cart Supply. The use of a wheeled container (open wire or enclosed construction) for the movement of materials. General configuration provides useable interior volumes of 30 to 40 cubic feet with load capabilities up to one thousand pounds.

Bumper Cart. A supply technique that utilizes the movement of a freshly supplied cart to a logistics station to replace a depleted one. Instead of returning the partially empty cart, with clean material, to be restocked (as in an exchange system) the material remaining on the cart is transferred to the "new" cart and the (now) empty cart is utilized for another function such as "soiled return".

BUMED. HQ U.S. Navy Bureau of Medicine and Surgery.

Business Occupancy. Business occupancies are those used for the transaction of business, for the keeping of accounts and records, and similar purposes. Doctors' offices, treatment and diagnostic facilities intended solely for outpatient care and physically separated from facilities for the treatment or care of inpatients, but otherwise associated with the management of an institution, may be classified as Business Occupancy.

Bulk Nitrous Oxide System. An assembly of equipment as described in the definition of bulk oxygen system that has a storage capacity of more than 3200 lb (1452 kg), approximately 28,000 cu ft (793 cu m) (NTP) of nitrous oxide.

Bulk Oxygen System. An assembly of equipment such as oxygen storage containers, pressure regulators, pressure relief devices, vaporizers, manifolds, and interconnecting piping that has a storage capacity of more than 20,000 cu ft (566 cu m) of oxygen (NTP) including unconnected reserves on hand at the site. The bulk oxygen system terminates at the point where oxygen at service pressure first enters the supply line. The oxygen containers may be stationary or movable, and the oxygen may be stored as gas or liquid.

BW/CW. Biological and Chemical Warfare. Provides defense against biological and/or chemical agents which may be used during combat situations.

C. Celsius.

CAPOC. Computer Assisted Practice of Cardiology.

Cardio. Has to do with the heart.

Cart (also called a "Module"). A wheeled vehicle upon which material is placed to transport it throughout the facility. Many cart variations are available. The movement of carts can be accomplished by employees and/or semi-automated and/or automated transportation systems as determined by careful analysis for each individual hospital.

Cartlift. A small vertical lift which is dedicated to the movement of carts. Cartlifts are usually automated and provide automatic dispatch and loading and unloading of carts. "Cartlifts" which are manually dispatched and require manual loading and unloading of carts are generally called cart dumbwaiters.

Cart Wash. The semi or fully automated machine that washes and rinses carts as required by the individual hospital's program. Units may provide automated or manual loading and unloading. Units may or may not provide a full drying capability. Selection of the correct unit(s) for an application should be made after a complete analysis of all requirements, including financial (LCC), traffic, etc. When the cartwash function is to be done manually, it is done by hose or steam gun in an equipment wash room or area.

Case Cart System. The use of a special cart for the transport of all linen and instruments for one surgical procedure. Where more than one "case" is contained, for simple procedures, the term multiple case cart is used. The cart may or may not be used as a back table and is designed accordingly.

Catchment Area. The geographical area of responsibility assigned to a health care facility providing services to the eligible population as listed in the Catchment Area Directory.

Category Code. Term used to identify real property building types by function. Example: Medical and Dental Treatment Facilities (MTF's) fall into category code 500.

CATV. Cable Television system for entertainment purposes.

CBA. Cost Benefit Analysis. The process of assessing all pertinent costs and benefits, usually performed in terms of an expected life-cycle of the system.

CBD. Commerce Business Daily.

CBTZ. Combat Zone.

CCA. Contamination Control Area.

CCP. Casualty Collection Point.

C-CS. Communications-computer system agreements with Host Nations OCONUS.

CCTV. Closed Circuit TV for security systems.

CDR. Call Detail Recording--telephone system.
Centralized Materials Management: The organization of all supply, processing, distribution, acquisition (purchasing),receiving, storage, inventory, and other related functions into one responsible operational entity.

CE. U.S. Army Corps of Engineers, also shown as USACE.

Central Material Service (CMS). The physical area and functional operation that is responsible for cleaning, sterilizing, preparing, packaging, storing and distribution of sterile items within the facility. CMS is the primary support element for the Operating suites and Labor and Delivery rooms.

CERCLA. Comprehensive Environmental Response Compensation and Liability Act.

CERL. Construction Engineering Research Laboratory.

CFA. Commission of Fine Arts.

CFC. Chlorofluorocarbon.

CFR. Code of Federal Regulations.

CGA. Compressed Gas Association.

Chain Conveyor. A conveyor that utilizes a chain to provide propulsion. Chain conveyors may be of the overhead or floor tow type.

CHAMPUS. Civilian Health and Medical Program for the Uniformed Services. Program administered by the Department of Defense that cost-shares for care delivered by civilian health providers to retired members, dependents of active and retired members, certain survivors of deceased members, and certain former retired members, certain survivors of deceased members, and certain former spouses of members of the seven uniformed services of the United States.

CHATH. Chemically Hardened Air Transportable Hospital.

CHCS. Composite Healthcare (Computer) Systems. Successor of Tri-Service Medical Information Service (TRIMIS) which was a part of the "new- generation" design concept. The TRIMIS Program Office initiative to implement a standardized, Tri-service, integrated health care management information system throughout the three MILDEPS.

Clinic A medical or dental treatment facility intended and appropriately staffed and equipped to provide primary ambulatory care services, limited specified secondary care services, and certain nontherapeutic activities related to the health of the personnel served, such as physical examinations, immunizations, medical administration, preventive medicine services, and health promotion activities.

CMTF. Contingency Medical Treatment Facility. An entity within the services' wartime organization structure which provides medical care during the contingency, war, or national emergency. Contingency Medical Treatment Facilities include medical treatment facilities afloat, deployable medical systems (DEPMEDS), and organizational medical assets.

Code. A document containing only mandatory provisions using the word shall to indicate requirements and in a form generally suitable for adoption into law.

COE. Chief Of Engineers. The Commander of the U.S. Army Corps Of Engineers.

Cold Room. A refrigerated area large enough for personnel to enter.

Combustion Products. The gases, volatilized liquids and solids, particulate matter, and ash generated by combustion.

Common Path of Travel. That portion of exit access that must be traversed before two separate and distinct paths of travel to two exits are available. Paths that merge are common paths of travel. Common path of travel is measured in the same manner as travel distance but terminates at the point where two separate and distinct routes become available.

Commission of Fine Arts (CFA). A regulatory body in the U.S. National Capital Region (NCR) which helps determine applicability of all Federal MILCON funded facilities within the U.S. National Capital Region. [See National Capital Planning Commission (NCPC).]

Compaction. A waste-handling methodology whereby the volume of waste materials is reduced for ease of disposal.

Composite Medical Facility (CMF). A MILCON funded facility made up of Health Care Occupancy and Business Occupancy (Outpatient Clinics and/or Dental Treatment Facilities) and/or Ambulatory Care Facilities. (See Medical and Dental Treatment Facility (MTF)).

Concepts. The first phase of design which includes Block Plans (S1), Schematics (S2), Design Development (S3) and the final 35 percent submission (S4). The basis on which a Programmed Amount (PA) can be set for the Budget Submission. Approximately 35 percent of the design effort, as opposed to the second phase of design which is called the "working drawings" phase of design.

Conductive. Not only those materials, such as metals, that are commonly considered electrically conductible, but also that class of materials which have a resistance not exceeding 1,000,000 ohms. Such materials are required where electrostatic interconnection is necessary.

Constructability. An analytical study which reviews the methodology, ease (or difficulty) with which a project can be administered, bid, built, enforced, understood, and phased which determines degrees of difficulty and construction time required to build a Medical Treatment Facility. (See section 2).

Construction Agent. The agency designated by the Secretary of Defense (SECDEF) responsible geographically (or by agreement) to erect, via contract, designs of Medical Treatment Facilities which have been coordinated by the Design Agents. Responsible for the project from Invitation for Bids (IFB) through Beneficial Occupancy (BOD) through the Warranty period(s). Current Construction Agents are:

a) The Corps of Engineers (USACE)

b) The Naval Facilities Engineering Command (NAVFAC)

c) The Air Force Engineers (AF/CECM) in the United Kingdom and selected MIP installations.

Continuing Education. Education beyond initial professional preparation that is relevant to the type of patient care delivered in the organization, and/or provides current knowledge relevant to an individual's field of practice, and/or health care delivery in general.

Contract Documents (CD's). Those design drawings and specifications which, as a unit, constitute the basis for receiving bids and awarding a contract for construction. CD's are the basis on which a building is constructed.

CONUS. Continental United States.

Conventional Construction. Existing traditional building methods as they are currently applied.

Court. An open, uncovered, unoccupied space, unobstructed to the sky, bounded on three or more sides by exterior building walls.

Court, Enclosed. A court bounded on all sides by the exterior walls of a building or exterior walls and lot lines on which walls are allowable. CPCS. Combat Personnel Control System. Commonly called the "electronic dog-tag," this is a developmental program to investigate the applicability of electromagnetic storage and data retrieval on combat personnel. Includes personnel and limited medical information.

CP&D. Central Processing and Distribution. An all-inclusive term for that function in a hospital which encompasses those terms variously known as Central Supply, Central Nursing Supply, Central Sterile Supply, and Central Material Services. Generally refers to a materials handling methodology. Provides for the central management of all medical material required to support patient care activities. The heart of this concept is an automatic distribution system. CPD requires the

standardization and centralization of the elements of storage and distribution.

Criteria. Military Handbooks, criteria manuals, guide specifications, definitive designs, using Military Department guidance, standard designs, and other related guidance published to promote quality facilities' engineering, design, construction, and maintenance.

Critical Branch. A subsystem of the emergency system consisting of feeders and branch circuits supplying energy to task illumination, special power circuits, and selected receptacles serving areas and functions related to patient care, and which can be connected to alternate power sources by one or more transfer switches during interruption of normal power source.

Critical Care Areas. See section 10 for list of critical care areas.

Critical Equipment. That equipment essential to the safety of the occupants of the facility.

Critical Path. The linear path through a work schedule network determining the shortest time within which all work can be completed.

Critical System. A system of feeders and branch circuits in nursing homes and custodial care facilities arranged for connection to the alternate power source to restore service to certain critical receptacles, task illumination, and equipment.

CRREL. U.S. Army Cold Regions Research and Engineering Laboratory. Hanover, NH.

CRS. Corrosion-resistant steel.

CRT. Cathode Ray Tube. A television-type systems input/output device for display of graphic and alpha-numeric characters.

CRTS. Casualty Receiving and Treatment Ship.

CSH. Combat Support Hospital.

Current Working Estimate (CWE). The current cost of the project based on actual takeoff's from Contract Documents. Required at certain levels of effort of design to compare against programmed amount (PA) to determine whether the project is executable given projected funds availability.

CWCT. Chemical Warfare Casualty Treatment Facility. A passively protected 2-E Contingency MTF.

DCA. Dental Compressed Air.

Damage Risk Classification Categories (Seismic). Three seismic categories that attempt to relate the seriousness of the consequences of damage due to earthquake. The selection of a category may consider the density of human occupancy, the importance of the activity, or the value of the contents or structure itself. These categories are as follows: Basic Life Safety, High Risk Facility, and Essential Facility. (See Section 6).

DCIS. Defense Criteria Information Systems.

Dedicated Elevators or Lifts. A vertical transportation element that will be restricted in use to a singular predefined function (ie: clean surgical material only; soiled material only, etc.

DEERS. Defense Enrollment Eligibility Reporting System. Automated system of verification of a person's eligibility to receive Uniformed Service benefits and privileges.

Defense Contracting Audit Agency (DCAA). That agency in the Department of Defense (DoD) responsible for auditing defense contractors

Defense Medical Facilities Office (DMFO). The Office of Primary Responsibility (OPR) for all DoD MILCON funded facilities. Organizationally the DMFO is a part of the DASD Health Services Operations under the Assistant Secretary of Defense for Health Affairs (OASD-HA).

Demand (or Unit) Delivery System. The methodology established for the movement of smaller supplies and, as applicable, messages, lab specimens, records, etc., that are not available from the user stocking/supply inventory or that has been depleted from same or occurs on a basis that is not routine or predictable.

Department of Defense Dependent Schools (DoDDS). The functional agency responsible for the design, construction, operations, maintenance, and staffing of schools for DoD dependents assigned overseas. Similar to DMFO, DoDDS is also the agency with which the using Medical Military Departments coordinate use of their schools as "buildings of opportunity" for contingency operations during wartime.

Departmental Gross Area. The functional space within a department plus intra-departmental circulation. Does not include "general" circulation.

DEPMEDS. Deployable Medical System(s). Contingency medical treatment facilities which are capable of being transported and located in a desired or required area of operation during a contingency, war, or national emergency. Deployable medical systems are composed of fixed contingency hospitals and other fixed contingency hospitals which are not normally used for patient care during peacetime.

DEQPPM. Defense Environmental Quality Program Policy Memoranda.

Design Agent (DA). That agency, designated by the Secretary of Defense (SECDEF), responsible to design facilities in the Miltary Construction Program. Design Agents are responsible for the design of projects from receipt of a Design Authorization from DMFO through turning it over to the Construction Agents. Design Agents are:

a) The U.S. Army Corps of Engineers (USACE). The USACE Medical Facilities Office (MFO) is the primary USACE point of contact with OASD(HA).

b) The Naval Facilities Engineering Command (NAVFAC). The NAVFAC Medical Facilities Design Office (MFDO) is the primary NAVFAC point of contact with OASD(HA).

c) The Air Force Engineers (AF/CECM) in the United Kingdom. Air Force Civil Engineering Directorate of Engineering is the primary point of contact with OASD(HA).

Design Authorization (DA). The notice from DMFO to the Design Agents to proceed with A-E selection and design of a project to a designated level of effort. Usually designates project, project fiscal year, project location, programmed amount (PA), scope of the project (size in square feet), which meetings DMFO will attend, any deviations from the submittal requirements in this MIL-HDBK, and whether or not DMFO wishes to participate in the A-E selection process.

DET. Design Energy Target.

DEU. Design Energy Usage.

DHV. Dental High Vacuum for oral evacuation.

DLV. Dental Low Vacuum for oral evacuation.

DHA. Defense Health Agency.

DHC. Defense Health Council. Made up of using Military Department Surgeons General or their designated representatives to determine the validity and support of new medical technology, i.e., Hyperbaric Medicine, Magnetic Resonance Imaging (MRI), Positron Emission Technology (PET), Lithotripsy, etc. and which facility will receive the new technology.

DIN. Deutsche Industrie Normen. Specification system developed in Germany and widely used throughout Western European Countries as the basis for specifying building materials, equipment, etc.

Disabled Person. An individual who has a physical or mental condition which, to a material degree, limits, contributes to limiting or, if not corrected, will probably result in limiting the individual's performance or activities to the extend of constituting a substantial physical, mental, or vocational handicap.

DLA. Defense Logistics Agency. The agency of the DoD which, under its director, is responsible for the wholesale management, procurement, and distribution of items of supply common to the military departments.

DMEL. Design Master Equipment List.

DMFO. Defense Medical Facilities Office.

DMIS. Defense Medical Information System. Provides management information to the OASD(HA), field activities, and military medical departments. Contains information on beneficiary populations, facilities, direct care costs and workloads, Civilian Health and Medical Program of the Uniformed Services (CHAMPUS) costs, and other aspects of the delivery of health care services within DoD.

DMSB. Defense Medical Standardization Board. Group of clinicians and logistics personnel responsible for readiness contingency standardization of DEPMED sets, iso-shelter, and temper-tent configuration for the using Military Departments. A single contact

point between DLA and other government agencies in all matters involving medical logistics.

DoD Medical Space Planning Panel. A panel that is responsible for developing health facility sizing criteria and for programming policy recommendations. The panel includes representatives of the Surgeons General of the Military Departments, the ASD(HA), and the ASD(MRA&L).

DPSC. Defense Personnel Support Center. Responsible for providing the most effective and economical support of designated common supplies (clothing and textile, medical and subsistence), medical equipment, and services to the military departments, and other DoD components.

DRB. Defense Review Board.

Drug Dispensing. The issuance of one or more doses of prescribed medication in containers that are correctly labeled to indicate the name of the patient, the contents of the container, and all other vital information needed to facilitate correct patient usage and drug administration.

Dumbwaiter. A small vertical lift which is dedicated to the movement of carts, tote boxes and other similarly-sized items. Generally this term implies manual loading and unloading of the cargo.

EA. Economic Analysis. A cost benefit analysis done to identify the relative cost-effectiveness of delivering healthcare to a projected beneficiary population under different MTF sizing scenarios. PL 97-337 (15 October 1982), amending Section 1087 of Title 10, U.S.C., requires an Economic Analysis be done to determine the space to be programmed in MTFs for military retirees and their dependents.

EEG. Electroencephalogramy.

EIA. Electronic Industries Association.

EIS. Environmental Impact Statement.

Electrical Life Support Equipment. Electrically powered equipment whose continuous operation is necessary to maintain a patient's life.

Elevator Population. The people (and other users) affecting the elevators in question.

EMCS. Energy Monitoring and Control System.

EMS. Emergency Medical Service.

Endemic. A disease of low morbidity that is constantly present in human community.

Engineering Instructions. Technical data from the Design Agents which expands the Design Authorization, clarifies numerous issues to be included in the Scope of Work (SOW), and specifies how the project is to be designed.

EPABX. Electronic Private Automatic Branch Exchange--telephone switch.

Equipment Grounding Bus. A grounding terminal bus in the feeder circuit of the branch circuit distribution panel that serves a particular area.

Equipment System. A system of feeders and branch circuits arranged for automatic or manual connection to the alternate power source and which serves primarily three phase power equipment.

Equivalency. Documented evidence that compliance with the intent of a standard has been achieved in a manner other than that prescribed by the standard.

Ergonometric Studies. These studies integrate the various work tasks assigned to human beings into the actual performance levels that can be expected (ie: how much physical effort can an employee be expected to exert at any one time and over an extended period). This ensures that tasks assigned to employees are not overly taxing and that the task should be performable by the personnel assigned within the time frame allocated.

ESCS. Engineered Smoke Control System.

Essential Electrical System. A system comprised of alternate sources of power and all connected distribution systems and ancillary equipment, designed to assure continuity of electrical power to designated areas and functions of a health care facility during disruption of normal power sources and also designed to minimize disruption within the internal wiring system. The essential electrical system consists of the emergency system and the equipment system.

Essential Facilities (Seismic). A seismic damage risk classification category. Facilities in the category are necessary for post-disaster recovery and require continuous operation during and after an earthquake (see Section 6). Efforts to control damage due to earthquake in this category are the greatest.

Etiologic Waste. Any viable microorganism or its toxins which causes or may cause human disease.

ETO. Ethylene Oxide.

ETS. European Telephone System.

EUCOM. European Command. The operating agency arm for the Joint Chiefs of Staff (JCS) in Europe.

Evaluation. Implies an analysis to be performed by the designer (A-E) in the basic contract (as opposed to "studies" or "investigations", which are extra services to be performed to complete the contract intent and requirements).

Exchange Cart System. A replenishment function for various types of supply items, that incorporates the use of carts that are "made up" in duplicate with one cart held at the user logistics station and the other in the cart assembly area. The freshly stocked cart is "switched" with the depleted cart on a scheduled basis to help insure adequate stocks of supplies are available to the using units and to assist in inventory and audit control. Many varieties of exchange cart systems can be

established depending on the actual needs, physical environments (space, etc. and established requirements of an individual facility.

Explosion Protection. Where hazardous processes or storage are of such a character as to introduce an explosion potential, explosion venting, or an explosion suppression system specifically designed for the hazard involved shall be provided.

Exposed Conductive Surfaces. Those surfaces which are capable of carrying electric current and which are unprotected, unenclosed, or unguarded permitting personal contact. Paint, anodizing, and similar coatings are not considered suitable insulation unless they are listed for use.

Facilities. Building(s), equipment, and supplies necessary for the implementation of services by personnel.

Facility. A separate individual building, structure, utility system, or other item of real property improvement each item of which is subject to separate reporting and recording in accordance with DoD Instruction 4165 14, Inventory of Military Real Property.

FAR. Federal Acquisitions Regulation.

Fast Track. An accelerated scheduling technique characterized by overlapping of activities traditionally performed in a linear sequence, requiring early commitment to general decisions, but allowing postponement of specific decisions.

FAX. Facsimile machine which transmits printed or written material over telephone line.

FCGS. Federal Construction Guide Specification.

Feeder. All circuit conductors between the service equipment or the source of a separately derived system and the final branch-circuit overcurrent device.

FEMA. Federal Emergency Management Agency.

FEMP. Federal Energy Management Program.

FIP. Federal Information Processing. Any ADP equipment procured with federal government funds.

Fire Barrier. A fire barrier is a continuous membrane, either vertical or horizontal, such as a wall or floor assembly that is designed and constructed with a specified fire resistance rating to limit the spread of fire and that will also restrict the movement of smoke. Such barriers may have protected openings.

Fire Compartment. A fire compartment is a space within a building that is enclosed by fire barriers on all sides including the top and bottom.

Fire Protection Engineer. A person, persons, or firm specializing in building fire protection design who (which) is qualified to interpret and design fire protection drawings and specifications in accordance with NFPA, JCAHO, UBC, and other regulatory requirements.

Fire Resistance Rating. The time, in minutes or hours, that materials or assemblies have withstood a fire exposure as established in accordance with the test procedures of NFPA 251, Standard Methods of Fire Tests of Building Construction and Materials.

Fire Window. A window assembly, including frame, glazing, and hardware that under NFPA 257, Standard for Fire Tests of Window Assemblies, meets the fire protective requirements for the location in which it is to be used.

FIRMR. Federal Information Resources Management Regulation, governs procurement of FIP equipment.

Fixed. Fastened to walls, floors, or ceiling or to steam, gas, plumbing, electrical power, sensor lines in a permanent manner.

Flame Spread. The propagation of flame over a surface.

Flammable. An adjective describing easy ignition, intense burning, and rapid rate of flame spread during combustion. It may also be used as a noun to mean a flammable substance. Many substances nonflammable in air become flammable if the oxygen content of the gaseous medium is increased.

Flammable Anesthetics. Gases or vapors, such as fluroxene, cyclopropane, divinyl ether, ethyl chloride, ethyl ether, and ethylene, which may form flammable or explosive mixtures with air, oxygen, or reducing gases such as nitrous oxide.

Flammable Anesthetizing Location. Any area of a facility that has been designated to be used for the administration of any flammable inhalation anesthetic agents in the normal course of examination or treatment. DoD facilities do not use flammable anesthesia except in some training situations in major medical centers.

Flammable Gas. Any gas that will burn when mixed in any proportion with air, oxygen, or nitrous oxide.

Flammable Storage Cabinet. A cabinet for the storage of flammable and combustible liquids constructed in accordance with NFPA 30, Flammable and Combustible Liquids Code.

Flash Point. The minimum temperature at which a liquid gives off vapor in sufficient concentration to form an ignitible mixture with air near the surface of the liquid within the vessel as specified by appropriate test procedures and apparatus.

Floor Area, Gross. Gross floor area shall be the total floor area within the building to include all rooms, mechanical rooms, hallways, stairs, closets, thickness of interior or exterior walls, columns, or other features. Where the term "area" is used, it shall be understood to be gross area unless otherwise specified. (See Section 2 and Figure 2-7 for expanded explanation.)

Floor Area, Net. Net floor area shall be the actual occupied area in a functional space, not including thickness of walls, chases, columns, or general circulation, etc. (See Section 2 and Figure 2-8 for expanded explanation.)

Floor Tow. A chain conveyor mounted into the floor that interfaces with special couplers or attachments on carts to move them from one station to another.

FM. Frequency Modulation--radio signal.

Freight Elevator. A special elevator used to move large freight items. This unit often uses vertical doors and requires an attendant to operate it. General public traffic is prohibited from using a freight elevator. Review ANSI A.17 code for classifications.

Friable. (Asbestos). Any material that contains more than 1% asbestos by weight and that can be crumbled, pulverized, or reduced to powder, when dry, by hand pressure.

FSC. Federal Stock (or Supply) Class/Code. A four-digit numeric which identifies a commodity by model, type, or material.

FSES. Fire Safety Evaluation System. In accordance with NFPA 101M.

Full-Time Equivalent (FTE). Work force equivalent of one individual working full-time for a specific period which may be made up of several part-time individuals or one full-time individual.

Functional Requirements. Those requirements necessary to ensure a particular facility continually meets the objective of the function for which it was constructed.

Gravity Chutes. Usually used for the vertical return of trash and linen (separate chutes) to a holding and collection room at the base of each chute.

Governing Body. The individual, group, or agency that has ultimate authority and responsibility for the overall operation of the organization.

Ground-Fault Circuit Interrupter (GFCI). A device whose function is to interrupt the electric circuit to the load when a fault current to ground exceeds some predetermined value that is less than that required to operate the overcurrent protective device of the supply circuit.

Grounding System. A system of conductors that provides a low-impedance return path for leakage and fault currents. It coordinates with but may be locally more extensive than the grounding system described in Article 250 of NFPA 70, National Electrical Code.

GSA. General Services Administration. A federal agency established by act of Congress in 1949 to consolidate the functions of several other agencies and to provide economical, efficient, and serviceable administration in the procurement, supply, utilization, disposal, and records management of certain real and personal property and services.

Handling Capacity, Elevator. The "quantity" measure of elevator service is called handling capacity. Handling capacity is the number of persons and vehicles which can be transported by the elevator system in a given length of time. Average interval and handling capacity must be measured or calculated for the same designated time period to be meaningful.

Handrail. A bar, pipe, or similar member designed to furnish persons with a handhold. (A handrail, if of suitable design, may also serve as part of a guard.)

Hazard Current. For a given set of connections in an isolated power system, the total current that would flow through a low impedance if it were connected between isolated conductor and ground.

Hazardous Area in Laboratories. The area inside fume hoods or enclosures where tests or procedures are being conducted.

Hazardous Areas. Areas of structures, buildings, or parts thereof having a degree of hazard greater than that normal to the general occupancy of the building or structure, such as storage or use of combustibles or flammables, toxic, noxious, or corrosive materials, or use of heat-producing appliances.

Hazardous Location. A flammable anesthetizing location or any location where flammable agents are used or stored. See National Electric Code, Article 500.

Hazardous Waste. Waste which is 1) toxic, 2) infectious, 3) radioactive, 4) reactive, ignitable (spontaneously), or corrosive.

HBV. Hepatitis B Virus.

HCFC. Hydrochlorofuorocarbon.

HDD. Heating Degree Days.

Health. A condition in which all functions of the body and mind are "normal" and active.

Health Care Facilities. Buildings or portions of buildings in which medical, dental, psychiatric, nursing, obstetrical, or surgical care is provided. Health care facilities include, but are not limited to, hospitals, nursing homes, limited care facilities, clinics, medical and dental offices, and ambulatory care centers, whether permanent or movable. (NFPA 99)

Health Care Occupancies. Health care occupancies are those used for purposes such as medical or other treatment or care of persons suffering from physical or mental illness, disease or infirmity; and for the care of infants, convalescents, or infirm aged persons. Health care occupancies provide sleeping facilities for four or more occupants and are occupied by persons who are mostly incapable of self-preservation because of age, physical or mental disability, or because of security measures not under the occupants' control.
Health care occupancies include:

a) Hospitals.

b) Nursing homes.

c) Limited care facilities.

d) Ambulatory health care centers.

Hematology. The science of the blood.

HEPA. High Efficiency Particulate Air.

High Hazard Areas. Areas of structure, buildings, or parts thereof used for purposes that involve highly combustible, highly flammable, or explosive products or materials that are likely to burn with extreme rapidity, or that may produce poisonous fumes or gases, including highly toxic or noxious alkalis, acids, or other liquids or chemicals that involve flame, fume, explosive, poisonous, or irritant hazards; also uses that cause division of material into fine particles or dust subject to explosion or spontaneous combustion, and uses that constitute a high fire hazard because of the form, character, or volume of the material used.

High Rise Building. A building more than 75 ft (23 m) in height. Building height shall be measured from the lowest level of fire department vehicle access to the floor of the highest occupiable story.

High Risk Facilities (Seismic). A seismic damage risk classification category. Facilities in this category are recognized as warranting a higher level of damage risk than the average building but less than for an essential facility. Efforts to control damage due to earthquake in this category are intermediate. (See Section 6).

Histology. Study of the microscopic structure of tissue.

HIV. Human Immunodeficiency Virus.

Home Care Department/Service/Program. A formally structured organizational unit of the hospital that is designed to coordinate the effective provision of physician-directed nursing and other therapeutic health care services in the patient's residence and that provides at least one therapeutic service directly.

Hospital. An inpatient medical treatment facility with an organized professional staff which has beds available 24 hours a day and is capable of providing definitive inpatient care. It is staffed and equipped to provide diagnostic and therapeutic services in the fields of general medicine, surgery, and preventive medicine services and has the supporting facilities to perform its assigned mission and functions. A hospital may, in addition, discharge the functions of a clinic and/or dental clinic.

Hospital Bed. A bed for an adult or child patient. Bassinets for newborns in maternity units, beds in labor rooms, recovery rooms, and other beds used exclusively for emergency purposes are not included in this definition.

HVAC. Heating, Ventilation, and Air-Conditioning.

Hyperbaric. Pressures above atmospheric pressure.

Hypobaric. Pressures below atmospheric pressure.

IBS. Integrated Building System. See Section 19.

ICU. Intensive Care Unit.

IES. Illuminating Engineering Society.

Incineration. In waste handling, the act of burning pathological and other designated waste/infectious waste in an incinerator in order to render the waste material(s) harmless.

Indirect Contract. A construction contract through the Host Country design or construction agent, often through a Status of Forces Agreement (SOFA); vis-a-vis "Direct" contracts through the USACE or NAVFAC.

Installation Medical Master Plan. A general site plan showing all existing medical structures proposed for retention or abandonment and all proposed project sites required to accomplish the projected medical mission.

Interdepartmental Circulation. General circulation. Circulation which provides access to and from various departments; includes elevators, stairs and major corridors.

Interface. 1) A common boundary between two systems or components. 2) A boundary detail designed to maintain a specified relation between adjacent systems or components.

Interstitial Space. Unfinished and unoccupied space between floors used for horizontal utility distribution systems, of sufficient size to accommodate workmen, and permit maintenance and alteration without interruption of activities on the floors. Refer to section 19.

Intradepartmental Circulation. The area reserved for corridors and passages which are found immediately within the departmental area.

Invitation For Bids (IFB). That point in the design-construction process when all review comments from the 100% design submittal have been incorporated, the CWE is within the Project Amount, DMFO has notified the Design/Construction Agent that funds are available, and DMFO has notified the Design/Construction Agent to advertise the project for bids. It is generally that point in the process when the project ceases to be a design effort and becomes a "Construction Project".

Isolated Power System. An archaic form of power system once used in flammable anesthetizing locations. Such systems are no longer required in DoD facilities.

Isolation Transformer. A transformer of the multiple-winding type with the primary and secondary windings physically separated which inductively couples its secondary winding to the grounded feeder systems that energize its primary winding.

JCS. Joint Chiefs of Staff. That agency within the DoD which jointly controls coordinated war planning for the Military Departments.

Joint Commission on Accreditation of Healthcare Organizations (JCAHO). Private, not-for-profit organization composed of representatives of the American College of Surgeons, American College of Physicians, American Hospital Association, American Medical Association, and American Dental Association whose purpose is to establish standards for the operation of health facilities and services, conduct surveys, and determine accreditation status of medical treatment facilities.

JSN. Joint Schedule Number. The number used to identify equipment on architectural drawings and plans supporting military construction projects.

LA. Laboratory Air.

Laboratory Work Area. A room or space for testing, analysis, research, instruction, or similar activities that involve the use of chemicals. This work area may or may not be enclosed.

LAN. Local Area Network. A modular communication methodology whereby the facility is prewired during construction for current and future communications (telephone, CHCS, etc.) needs without having to surface mount additional wires or coax in the future and reduce future communication installation costs.

Langelier's Index. A calculated number used to predict whether or not a water will precipitate, be in equilibrium with, or dissolve calcium carbonate.

LCCA. Life Cycle Cost Analysis.

LDE. Laboratory Dust Evacuation.

Life-Cycle-Cost (LCC). The determination, evaluation, and presentation of all costs incurred by and in a facility being engineered/designed. Includes costs of planning, designing, engineering, constructing, operating, and maintaining a component, system, or the facility.

Life Safety Branch. A subsystem of the emergency system consisting of feeders and branch circuit, meeting the requirements of Article 700 of NFPA 70, National Electrical Code, intended to provide adequate power needs to ensure safety to patients and personnel, and which can be automatically connected to alternate power sources during interruption of the normal power source.

Life Safety Code (L.S.C.). Standard developed and updated regularly by the National Fire Protection Association that specifies construction and operational conditions to minimize fire hazards and provide a system of safety in case of fire.

Life Safety Code Upgrade. The term used when the primary purpose for a project at a facility is to compartmentalize, provide for egress, and generally bring the facility up to the L.S.C. standard for access and exiting requirements.

Life Safety and Utility Upgrade. This term is used when the facility requires a full NFPA modernization which is not limited to NFPA 30, 37, 70, 99, 101, and 110.

Load, Live. The weight superimposed by the use and occupancy of the building not including wind load, earthquake load, or dead load.

Logistics Elevator. An elevator whose primary purpose is to transportation various supplies (dietary, medical/surgical supplies, etc., devices and equipment as well as occasional construction materials, etc.

Long-Range Plan. A listing of proposed health facilities construction considered appropriate for inclusion in the Six-Year Defense Program that reflects total health facilities requirements. Synonymous with "Six-Year Defense Program" and SYDP.

MASH. Mobile Army Surgical Hospital.

Material Handling (MH). The function of moving, packaging and storing of substances in any form. MH does not alter, change, enhance or add value to a product in any way. It is a "cost" function only which should be minimized to the greatest extent possible (within given aseptic, physical, operational and functional parameters).

Materials Management (MM). The general methodologies and organization responsible for all material and supply functions from the acquisition process through all other functions until final disposal or salvage. Organizationally the most efficient structure within most hospitals is the "centralized" one (see above). Various reporting structures can be established depending on the requirements and other pertinent factors at a specific institution.

Materials Processing. The function that does alter, change, make ready, etc. products and supplies (such as cleanup and sterilization of surgical instruments, etc. in advance of use.

May. "May" is used to indicate provisions which are used at the option of the designer.

MDF. Main Distribution Frame for telephone system.

MDIS. Medical Digital Imaging System.

Means of Egress. A means of egress is a continuous and unobstructed way of exit travel from any point in a building or structure to a public way and consists of three separate and distinct parts:

a) The exit access.

b) The exit.

c) The exit discharge.

A means of egress comprises the vertical and horizontal travel and shall include intervening room spaces, doorways, hallways, corridors, passageways, balconies, mezzanines, ramps, stairs, enclosures, lobbies, escalators, horizontal exits, courts, and yards.

Mechanical Space. The area which houses the primary and intermediate components of the air conditioning, plumbing, communication, electrical and ventilation systems. This area includes chases and shafts as well as mechanical and electrical equipment rooms.

MCA. Medical Compressed Air.

Medical Military Construction Program (MILCON). That portion of the President's budget devoted exclusively to the renovation, upgrade, and replacement of Medical Treatment Facilities which costs more than $200,000. MILCON is not supposed to include Operations and Maintenance

(O&M) or Repair and Maintenance (R&M) unless the area which could be done with O&M or R&M is affected by the larger MILCON project and must be accomplished to provide a complete and usable facility in accordance with NFPA and JCAHO requirements.

Medical and Dental Treatment Facility (MTF). A facility established for the purpose of furnishing medical and/or dental care to eligible individuals.

MEDRAMS. Medical Readiness Assemblage Material System. An information system to assist in the inventory and equipment management for prepositioned contingency supplies and equipment.

MERC. Medical Equipment Repair Center. A consolidated intermediate level maintenance activity designated to provide medical equipment maintenance and engineering support to DoD medical activities.

Mezzanine. An intermediate level between the floor and the ceiling of any room or space and covering not more than one-third of the floor area of the room or space in which it is located.

MFO. Medical Facilities Office.

MFDO. Medical Facilities Design Office.

MFAMB. Medical Facilities Acquisition and Maintenance Board.

MFRCL. Medical Facilities Room Contents List.

MHSS. Military Health Services System.

Migration: When more than one elevator group is available in a building, a passenger's origin does not necessarily dictate which elevator group will be used. A certain percentage of the population will migrate to other areas of a building to use an elevator for reasons such a meeting a friend or dropping off something on the way to their destination. This percentage is usually estimated to be 5-10% of the population (or as otherwise appropriate for the facility being studied).

Military Construction Programming. The annual processing, review, and approval of military construction project proposals by the Military Department Secretaries, the OSD, and the OMB for submission to the Congress.

Mixed Occupancies. Sections of health care facilities may be classified as other occupancies if they meet all of the following conditions:

a) They are not intended to serve health care occupants for purposes of:

1. Housing, or

2. Treatment, or

3. Customary access by patients incapable of self-preservation.

b) They are adequately separated from areas of health care occupancies by construction having a fire resistance rating of at least 2 hours.

MODEM. Modulator-Demodulator. Communications device used to link computers with remote terminal devices or other remotely located computers.

Modernization. Alteration, repair, remodeling, replacement and renovation of existing buildings (including initial equipment thereof) and replacement of obsolete, built-in equipment of existing buildings. It does not include replacement of a facility or a portion to a capacity greater than the capacity of the existing facility.

Modular. 1) Having commensurable dimensions.

2) Capable of arrangement with exact fit in more than one sequence or direction.

3) Composed of/or containing predetermined dimensional and/or functional units such as repetitive structural bays or service modules.

MPRC. Medical Planning Review Committee.

MSDS. Material Safety Data Sheets.

MTMC. Military Traffic Management Command.

Must. Indicates a mandatory requirement. Analogous to shall.

MV. Medical Vacuum.

National Capital Planning Commission (NCPC). A regulatory body in the U.S. National Capital Region (NCR) which helps determine applicability of all Federal MILCON funded facilities within the U.S. National Capital Region. (See definition of Commission of Fine Arts and National Capital Region.)

National Fire Codes. Codes published by the National Fire Protection Association (NFPA).

NATO. North Atlantic Treaty Organization.

NAVAIDS. Air and Sea Navigational Aids.

NAVFAC. Naval Facilities Engineering Command.

NAVFACINST. Naval Facilities Division Instructions. U.S. Navy design and construction guidance for use in the design and construction of Navy Facilities.

NC-LEVEL. Noise Criteria-Level. Refers to a set of contours, roughly corresponding to the ear's response to Sound Pressure Level at various frequencies, which define the background sound level existing within a space.

NCRP. National Council of Radiation Protection and measurements.

NEPA. National Environmental Policy Act.

NESHAPS. National Emission Standards for Hazardous Air Pollutants.

NIOSH. National Institute for Occupational Safety and Health.

NIST. National Institute of Standards and Technology.

NO. Nitrous Oxide.

Noncombustible Material. A material (as defined in NFPA 220, Standard on Types of Building Construction) that, in the form it is used and under the conditions anticipated, will not ignite, burn, support combustion, or release flammable vapors when subjected to fire or heat. Materials reported as noncombustible when tested in accordance with the Standard Test Method for Behavior of Materials in a Vertical Tube Furnace at 750 degrees C, ASTM E136, shall be considered noncombustible materials.

Nonflammable Anesthetic Agent. Refers to those inhalation agents that because of their vapor pressure at 98.6 degrees F (37 degrees C) and at atmospheric pressure cannot attain flammable concentrations when mixed with air, oxygen, or mixtures of oxygen and nitrous oxide.

Nonflammable Anesthetizing Location. Any anesthetizing location designated for the exclusive use of nonflammable anesthetizing agents.

Nonflammable Medical Gas System. A system of piped oxygen, nitrous oxide, compressed air, or other nonflammable medical gases.

Non Routine Movements. Those movements that occur on a demand basis and are generally unschedulable (ie: STAT moves, lab samples/requests, etc.).

Nosocomial. Pertaining to or originating in a hospital.

NPDES. National Pollutant Discharge Elimination System.

NSN. National Stock Number. Medical equipment identification consisting of an applicable four-digit class code number plus the nine-digit national item identification number.

Nursing Care Unit (NCU). An organized jurisdiction of nursing service in which nursing services are provided on a continuous basis.

Nursing Services. Activities related to nursing care performed by nurses and other professional and technical personnel under the supervision of a registered nurse.

Nurses' Stations. Areas intended to provide a center of nursing activity for a group of nurses serving bed patients where the patient calls are received, nurses are dispatched, nurses' notes written, inpatient charts prepared, and medications prepared for distribution to patients. Where such activities are carried on in more than one location within a nursing unit, all such separate areas are considered a part of the nurses' station.

OASD(HA). Office of the Assistant Secretary of Defense(Health Affairs).

Occupancy. The purpose for which a building or portion thereof is used or intended to be used.

Occupant Load. The total number of persons that may occupy a building or portion thereof at any one time.

Occupiable Story. A story occupied by people on a regular basis. Stories used exclusively for mechanical equipment rooms, elevator penthouses, and similar spaces are not occupiable stories.

OCONUS. Outside the Continental United States.

OHCS. OSHA Hazard Communication Standard.

Operational Level Category (Seismic). These categories define the post-earthquake performance requirements for various facilities with respect to operational mission, disaster preparedness, and medical post-earthquake needs.

Operations and Maintenance (O&M) FUNDS. Those funds other than MILCON used for the express purpose of upgrading and maintaining existing facilities and equipment, or for the purchase of government furnished equipment and furnishings (not built-in) to provide a complete and usable facility at BOD.

OSHA. Occupational Safety and Health Administration.

OSHOSP. Overseas Hospital.

OX. Oxygen.

PA. Process Air.

PACOM. Pacific Command. The operating arm for the Joint Chiefs of Staff (JCS) in the Pacific. Located in Hawaii.

Par Stock(ing). A supply technique which utilizes fixed or moveable shelving within a logistics center to hold preset levels of user required inventories. Resupply of depleted items is done on a periodic basis (generally from a "master" supply cart which is moved from station to station).

Passenger Elevator. An elevator configured to move visitors, staff and other ambulatory pedestrian traffic between floors. This elevator is generally wide and shallow in configuration to facilitate the movement of pedestrians.

Patient Care Area. Any portion of a health care facility wherein patients are intended to be examined or treated.

Patient Service Elevator. An elevator configured to move patients on beds and gurneys, as well as patient care related equipment such as portable X-rays, inhalation equipment, empty gurneys, wheelchairs, etc. This elevator is generally narrow and deep to facilitate the loading and unloading of this traffic.

PCCIE. Power Condition and Continuation Interfacing Equipment. Electronic devices to help smooth power fluctuations to computer systems. Precludes sudden loss of power or damaging spikes in current flows.

Permanent. For the purposes of Medical MILCON construction, any structure designed for a useful life-span of 25 years or longer.

PET. Positron Emission Tomography.

Plan of Correction, Conditional Accreditation. An organization's written plan, approved by Joint Commission staff, that outlines the activities that the organization will take to address compliance issues that caused the Accreditation Committee to make a decision of Conditional Accreditation. The plan will be the basis for the follow-up survey six months following approval of the plan.

Plan of Correction. An organization's written statement, approved by Joint Commission staff, that details the procedures to be taken to correct existing life safety deficiencies and lists the extraordinary safety measures to be implemented to temporarily reduce the hazards associated with the deficiencies.

Plumbing Fixture. Installed receptacles, devices or appliances which are supplied with water or which receive liquid or liquid borne wastes and discharge such wastes into drainage systems to which they may be directly or indirectly connected.

Pneumatic Tube System. A pneumatically powered small diameter tube (usually 4" or 6") that moves special carriers which contain messages, small supplies or other items that physically "fit" and can tolerate this method of transport. These systems can be point-to-point or multi-station in design.

POL. Petroleum, Oils, and Lubricants.

POM. Program Objective Memorandum. Formal document to identify major initiatives, their resource consumption estimates, and their operational justification used to prioritize and allocate manpower and fiscal resources.

Post Occupancy Evaluation (POE). An evaluation of the design and construction of a facility performed after BOD to obtain lessons-learned which can be applied to present and future designs and criteria.

PRC. Program Review Council. Review body who makes recommendations on POM initiatives as part of the overall program review process. Precious Metals Recovery Program. Promotes the economical recovery of precious metals from excess and surplus materials, and the use of recovered precious metals as Government Furnished Material.

Pre-Engineered Buildings (PEB's). For the purpose of this criteria, pre-engineered buildings shall be considered as those buildings in various configurations and sizes that are available from manufacturers as a standard item. This type of construction may be used for DoD medical and dental facilities where such use is indicated by life cycle cost to be economical, where they will meet the performance and functional requirements of the project and are architecturally

compatible with the environment in which they will be erected. Because of the great variance in the quality and cost of such structures on the market, extreme care must be used in selection to ensure that the quality of the facility to be provided is commensurate with the project requirement and expected longevity of the mission to be served. Prefabrication. The on-site or off-site advance manufacture of building systems and components traditionally fabricated in place during installation.

Pressure Reducing Regulator. A device that automatically reduces gas under high pressure to a usable lower working pressure. In hospitals, the term "regulator" is frequently used to describe a regulator that incorporates a flow-measuring device.

Preventive Maintenance. The care and servicing of facilities or equipment for the purpose of retaining it in a serviceable condition.

PRISM. Provider Requirements Integrated Specialty Model. Automated information system used to analyze current and projected manpower requirements by provider specialty codes.

Programmed Amount (PA). The initial programmed amount is the estimated cost of a facility based on the DoD Cost Guidance and 1391 preparation prior to any design effort which establishes a project's viability in the budget cycle. Once Concept Design is completed the PA may be adjusted (up or down) based on the developed and validated CWE from the Design Agents. This PA (new) may be the amount sent to Congress and the basis of Final Contract Document Design phases through Invitation for Bid (IFB).

Protective Construction. Protective construction is defined as those measures which can be effected by construction related activities to reduce or nullify the effects of an attack upon the installation and/or enhance the recuperability of the installation after attack. The term includes dispersion and duplication of structures and activities, strengthening (hardening) of structures, camouflage or "tone-down" painting and physical protection against chemical, biological, and radiological agents.

Protected Structure. (Also a "hardened structure".) Structures designed to protect the occupants and functions therein from the effects of blast pres- sure, penetration, fragmentation, and ground shock due to use of conventional weapons against the facility.

Provider. Healthcare professional or facility or group of healthcare professionals or facilities that provide healthcare services to patients.

Public Way. Any street, alley, or other similar parcel of land essentially open to the outside air, deeded, dedicated, or otherwise permanently appropriated to the public for public use and having a clear width and height of not less than 3 m (10 ft).

PVC. Polyvinyl chloride.

Queuing Analysis. In its simplest form a "queue" is a "line" of people, objects etc., waiting for some function or process (ie: people waiting for an elevator, carts waiting to enter[automatically] into a cart lift or cartwash, etc. to be completed before "they" can be accommodated. A

queuing analysis is the mathematical computations that establish the probability factors necessary to determine the number, type and handling capacities of functional equipment and the length of queuing space required for various functions (i.e. The number and type of cartwashers AND the space in advance of the equipment that will be necessary to process and otherwise accommodate X number of carts in Y minutes. Many mathematical probability formulas are available (ie: "Monte Carlo" theory; Poison Distribution, Binomial Distribution, etc. as well as "industry standard" formulas that are more "experience based" than mathematical.

RA. Risk Analysis. The process by which designs are evaluated to assess the security and information system privacy safeguards they must possess.

Rad/Fluoro. Radiographic/Fluoroscopic.

Ramp. A ramp is a inclined floor surface or a surface in an accessible space that has a running slope greater than 1 in 20.

RAS. Regimental Aid Station.

RCRA. Resource Conservation and Recovery Act. 42 USC 6973.
Readiness, Military. The ability of forces, units, weapons systems, or equipment to perform as they were intended and to deploy and employ without unacceptable delays.

Relocatability. The ability to economically dismantle, transport to a new location, and re-erect a facility.

Relocatable Contingency Medical Treatment Facility (CMTF). A CMTF designed specifically for mobility. Mobility is a quality or capability that permits these CMTFs to move from place to place while retaining the ability to fulfill their primary mission for the Military Services.

RFI. Request for Information. A procurement device which provides commercial industry with a background statement of a system(s) requirement and requests industry to comment on the requirement noting its expected technical feasibility and its possibilities for meeting projected cost and milestone schedules.

RFP. Request for Proposal. A procurement document released to commercial industries outlining a requirement for development and/or implementation of a system or design. Industry provides its formal response in the form of proposed solutions to the problem defined, its cost and development schedules, and other pertinent data upon which the government selects a vendor(s) with whom to contract.

Resource Analysis and Planning System (RAPS). An automated tool that provides users the capability of assessing the impact of alternative assumptions and policy decisions on the beneficiary populations, utilizations, manpower requirements, and costs of the Military Health Services System (MHSS). It is intended primarily as an analysis tool, not as an authoritative data retrieval system, although it may be used to provide the best population estimates currently obtainable.

Respiratory Care Department/Service. An organizational unit of the hospital that is designed for the provision of ventilatory support and associated services to patients.

Risk. The possibility of suffering harm, disease, or loss.
Risk Management. Function of planning, organizing, implementing, and directing a comprehensive program of activities to identify, evaluate, and take corrective action against risks that may lead to patient, visitor, or employee injury and property loss or damage with resulting financial loss or legal liability.

Routine Movements. Those movements that occur on a regular, predictable and schedulable basis.

RPIE. Real Property Installed Equipment. Items of equipment attached to or installed in real property.

Schematic Design. Room-by-room scaled drawings defining the size and arrangement of areas in a building or building configuration as a basis for design development.

SCPS-M. Survivable Collective Protection System-Medical. Sometimes called the "French Sewer Pipe Solution." One, of many solutions, to provide an overpressured environment in a chemical-biological (CB) contaminated environment to provide a clinically sound "shirt-sleeve" working environment for patients and providers in the Combat Zone. Consists of 10 foot (minimum) concrete pipe sections overburdened with earth and a maze entry. An outgrowth of survivable collection shelters used for air crews and other "sortie-generating" personnel who have to remain in the Combat Zone during a conflict.

Section 2807, Title 10, U.S.C. The appropriate committees of Congress must be notified of the intent to award a contract for architectural and engineering services and construction design for the proposed military construction project if the estimated cost of such services exceeds $300,000. This notification must include the scope of the proposed project and the estimated cost of such services and must be made not less than 21 days before the initial obligation of funds for such services.

Semi-Permanent. For the purposes of medical MILCON construction, any structure designed to last between 5 and 25 years of useful life. An example is an overseas free-standing contingency facility off-base.

Service Elevator. An elevator that is "narrow and deep" in configuration to move patients and vehicular type traffic between floors.

Shall. Indicates a mandatory requirement, synonymous with "will."

Should. Indicated a recommendation or alternative that is highly advised but not absolutely required.

SHDA. Surgical Handpiece Drive Air.

SID. Structural Interior Design. That portion of basic design services concerned with establishment of "motif," color and finish selection usually very early in the Concept Design phase of all fixed,

"structurally related" finishes, i.e., walls, floors, ceilings, columns, fixtures, casework, equipment, exteriors, etc. as opposed to comprehensive Interior Design (CID) which is an option to design services and relates to moveable, mobile, portable equipment, fixtures, furnishings, etc. For unity of color selection and design, both the SID and the CID must be compatible, conform to the finish schedule, and coordinate early and throughout the design, procurement, construction, and installation processes. (See sections 2 and 4.)
Simulation. The use of a computer program as a model of a real situation.

Six-Year Defense Program (SYDP). Includes all military construction projects proposed by the Military Departments for the next six (6) years. The program is updated annually. Synonymous with "Long-Range Plan."

SMDR. Station Master Detail Recording--telephone system.

Smoke Barrier. A smoke barrier is a continuous membrane, either vertical or horizontal, such as a wall, floor, or ceiling assembly, that is designed and constructed to restrict the movement of smoke. A smoke barrier may or may not have a fire resistance rating. Such barriers may have protected openings.

Smoke Compartment. A smoke compartment is a space within a building enclosed by smoke barriers on all sides including the top and bottom. In the provision of smoke compartments utilizing the outside walls or the roof of a building, it is not intended that outside walls, roofs or any opening therein be capable of resisting the passage of smoke.

Smoke Detector. A device that senses visible or invisible particles of combustion.

Special Care Unit (SCU). A medical care unit in which there is appropriate equipment and a concentration of physicians, nurses, and others who have special skills and experience to provide optimal care to critically ill patients.

Statement of Work or Scope of Work (SOW). A formalized document describing the details of an effort to be accomplished through contracted resources.

State-of-the-Art. The scientific and technical level attained at a given time.

Station Outlet. An outlet point in a piped medical gas distribution system at which the user makes connections and disconnections.

Status of Forces Agreements (SOFA). Agreements between the United States government and the government of a foreign nation (host nation) which allows U.S. Forces to engage in some activity (such as occupy, build, or otherwise have temporary rights) which otherwise would not be possible. SOFA agreements usually stipulate governing rules, codes and standards which must be followed in the course of construction on that nation's soil.

STC. Sound Transmission Class. A single-number rating system which compares the Sound Transmission Loss of a test specimen with a standard contour.

Sterilization. One of many methods of waste handling. Sterilization relates to rendering hazardous or infectious wastes harmless (i.e., free from living microorganisms, etc.) by antiseptic solution, heat, steam, and/or pressure.

Story. That portion of a building included between the upper surface of a floor and the upper surface of the floor or roof next above. Stories shall be counted starting at the primary level of exit discharge and ending at the highest occupiable level. For the purposes of this definition, the primary level of exit discharge of a building shall be that floor that is level with or above finished grade of this exterior wall line for 50 percent or more of its perimeter. All DoD facilities shall conform to this definition.

Street. Any public thoroughfare (street, avenue, boulevard) 30 ft (9.1 m) or more in width that has been dedicated or deeded to the public for public use and is accessible for use by the fire department in fighting fire. Enclosed spaces and tunnels, even though used for vehicular and pedestrian traffic, are not considered as streets for the purposes of this definition.

Street Floor. Any story or floor level accessible from the street or from outside the building at ground level with floor level at main entrance not more than three risers above or below ground level at these points and so arranged and utilized as to qualify as the main floor. Where, due to differences in street levels, there are two or more stories accessible from the street, each is a street floor for the purposes of this handbook. Where there is no floor level within the specified limits for a street floor above or below ground level, the building shall be considered as having no street floor.

SWDA. Solid Waste Disposal Act.

Systems Analysis. Analysis of a sequence of activities or management operations to determine which activities or operations are necessary and how they can be accomplished.

Systems Approach. 1) An approach which involves identifying and describing each component of a system process and determining the relationships among the stages, including the inputs and outputs for each stage, so that the functioning of the total process relative to its environment can be understood.

2) A strategy of problem definition and solution which emphasizes the interaction between problem elements and between the immediate problem and its larger context and which specifically avoids traditional methods of independent and separate treatment of the various elements.

Systems Integration. 1) The combination of a group of relatively independent parts into a coordinated whole to improve performance through controlled interaction.

2) The joint use of a component by two or more systems.

TA. Table of Allowance. An equipment allowance document which prescribes basic allowances of organizational equipment and provides the control to develop, revise, or change EAID.

T-AH. Hospital Ship.

TAMMIS. Theater Army Medical Management Information System. A developmental information processing system to support U.S. Army field medical activities linking them to appropriate DoD patient regulating and transportation agencies and to the hospitals of the Army Medical Service.

Task Illumination. Provisions for the minimum lighting required to carry out necessary tasks, including safe access to supplies and equipment and access to exits.

TDA. Table of Distribution and Allowances.

TDY. Temporary Duty.

TIA. Telecommunication Industry Association.

TOE. Table of Organization and Equipment.

Total Gross Area. The total area including intra-departmental circulation, inter-departmental circulation, walls and structure, mechanical space, and total net area.

Triage. The evaluation and classification of casualties for purposes of treatment and evacuation. It consists of sorting patients according to type and seriousness of injury and the establishment of priority for treatment and evacuation.

TSB. Telecommunications Systems Bulletin.

TSCA. Toxic Substances Control Act.

TSRS. Telephone Station Requirement Schedule.

UCA. Uniform Chart of Accounts. The formal cost accounting process for health care management in the three MILDEPS. Accumulates, through standard work center allocations, costs for inpatient and outpatient services.

UCA/ASDC. Uniform Chart of Accounts/Automated Source Data Collection. The system to automatically collect workload and cost allocation data associated with the Uniform Chart of Accounts.

UFAS (Uniform Federal Accessibility Standards). Published as 49 CFR 31528 on August 7, 1984, the Department of Defense adopted the UFAS on May 8, 1985, and published the UFAS as FED STD 795 on April 1, 1988.

UMCS. Utility Monitoring and Control Systems.

Universal X-Ray Room. The universal x-ray room shall be capable of accepting all routine radiographic, fluoroscopic, and tomographic

equipment up to 1200 ma, 150 kvp, regardless of manufacture, during initial installation and subsequent replacement actions with little, if any, facility modification. The procedures shall be performed unencumbered and without any restriction of system components, patient size, or any known procedure that any installed X-ray equipment can perform now or in the future. This definition does not apply to digital radiography, special procedure rooms, C-arms, or angiography rooms. (See Appendix C).

UPS. Uninterruptible Power Supply. A system of batteries and capacitance power storage devices to preclude catastrophic failure of critically important information processing systems. During an electrical power failure, it provides a continuous flow of power to a computer system for a specified period of time during which system operators may shut down a system without loss of information or loss of data base addressing structures.

USA. Unites States Army.

USACE. United States Army Corps of Engineers.

USAF. United States Air Force.

USAMRDC. U.S. Army Medical Research and Development Command.

USC. United States Code.

Use Point. A room, or area within a room, where medical gases are dispensed to a single patient for medical purposes. A use point may comprise a number of station outlets of different gases.

Using Military Department. Synonymous with using Service, i.e., the U.S. Army, Navy, or Air Force.

USMC. United States Marine Corps.

USN. United States Navy.

USPS. United States Postal Service.

Value Engineering (VE). Value engineering studies consist of analyses of certain high cost areas of a design to determine if an alternate way exists to achieve the same or improved function at a lower life cycle cost. The main objectives of VE studies are reduced life cycle cost and improved quality of design. The application of value engineering shall not result in a lowering of criteria, quality standards, or reduction of scope as established by the guidance in this document. (See section 2).

VAV. Variable air volume.

Vehicular Traffic. This traffic is generally defined as that traffic that is pushed, or rolled into elevators on wheels. Examples of vehicular traffic are beds and gurneys. Wheelchairs are considered vehicular traffic where they are pushed by an escort or attendant, and where the occupant is a patient. Where wheelchairs carry staff or visitors, they are generally counted in with the pedestrian population since they would utilize passenger elevators.

Vertical Traffic Pattern. Peak elevator traffic in a medical complex is usually heavy multiple two-way, i.e., considerable traffic is being handled in both the UP and DOWN directions, with passengers and vehicles entering and exiting the cars at various floors throughout the elevator round trip. This differs considerably from commercial elevators where two-way peaks are primarily "lobby" related with minimal intermediate traffic and where one-way traffic peaks can be expected at predictable times. This type of heavy one-way peak is experienced in hospitals during shift changes, but there remains a large amount of opposing traffic at the same time, as well as substantial intermediate floor-to-floor travel. Proper planning, scheduling, and separation of traffic is required to ensure adequacy of service.

WAGD. Waste Anesthesia Gas Disposal.

WMP. War Mobilization Plan. Provides WRM programs and objective time frames for each location.

Working Drawings. The second half of the Design Phase which includes the final development of all contract documents to prepare for the bidding phase.

WRM. War Reserve Material. That material required to augment peacetime assets to completely support forces, missions, and activities reflected in DoD/JCS war plans.

X-Ray Installations (Long-Time Rating). A rating based on an operating interval of 5 minutes or longer.

X-Ray Installations (Mobile). X-ray equipment mounted on a permanent base with wheels and/or casters for moving while completely assembled.

X-Ray Installations (Momentary Rating). A rating based on an operating interval that does not exceed 5 seconds.

X-Ray Installations (Portable). X-ray equipment designed to be hand carried.

X-Ray Installations (Transportable). X-ray equipment to be installed in a vehicle or that may be readily disassembled for transport in a vehicle.

BLANK PAGE

STANDARDIZATION DOCUMENT IMPROVEMENT PROPOSAL

INSTRUCTIONS

1. The preparing activity must complete blocks 1,2,3, and 8. In block 1, both the document number and revision letter should be given.

2. The submitter of this form must complete blocks 4,5,6, and 7.

3. The preparing activity must provide a reply within 30 days from receipt of the form.

NOTE: This form may not be used to request copies of documents, nor to request waivers, or clarification of requirements of current contracts. Comments submitted on this form do not constitute or imply authorization to waive any portion of the referenced document(s) or to amend contractual requirements.

I RECOMMEND A CHANGE:	1. DOCUMENT NUMBER MIL-HDBK-1191	2. DOCUMENT DATE *(YYMMDD)* 960524

3. DOCUMENT TITLE
DEFENSE MEDICAL MILCON FACILITIES, DESIGN AND CONSTRUCTION CRITERIA

4. NATURE OF CHANGE *(identify paragraph number and include proposed rewrite, if possible. Attach extra sheets as needed.)*

5. REASON FOR RECOMMENDATION

6. SUBMITTER

a. NAME *(Last, First, Middle Initial)*	**b. ORGANIZATION**	
c. ADDRESS *(Include Zip Code)*	**d. TELEPHONE** *(Include Area Code)* **(1) Commercial** **(2) AUTOVON** *(If applicable)*	**7. DATE SUBMITTED** *(YYMMDD)*

8. PREPARING ACTIVITY

a. NAME HOWARD STICKLEY	b. TELEPHONE (Include Area Code) (1) Commercial (2) AUTOVON (202) 761-1541
c. ADDRESS *(Include Zip Code)* U.S. Army Corps of Engineers (CEMP-EM) 20 Massachusetts Avenue, NW Washington, DC 20314-1000	IF YOU DO NOT RECEIVE A REPLY WITHIN 45 DAYS, CONTACT: Defense Quality and Standardization Office 5203 Leesburg Pike, Suite 1403, Falls Church, VA 22041-3466 Telephone (703) 756-2340 AUTOVON 289-2340