US Army Corps
of Engineers

Southwestern Division

Architectural and Engineering Instructions Manual (AEIM)

October 2000

US Army Corps of Engineers Southwestern Division
Architectural and Engineering Instruction Manual
2000 Edition

TABLE OF CONTENTS *

Chapter I - GENERAL

Chapter II - CIVIL **

Chapter III - ARCHITECTURAL

Chapter IV - STRUCTURAL **

Chapter V - MECHANICAL **

Chapter VI - ELECTRICAL **

Chapter VII - SPECIFICATIONS

Chapter VIII - DRAWINGS **

Chapter IX - DESIGN ANALYSIS

Chapter X - COST ENGINEERING GUIDE FOR MILITARY CONSTRUCTION

Chapter XI - DESIGN SUBMITTAL REQUIREMENTS

Chapter XII - ENVIRONMENTAL

Chapter XIII - GEOTECHNICAL

NOTES:

* A Table Of Contents is in each chapter.

** Chapters with Appendices containing plates. A Table Of Contents for plates is in each appendix.

CHAPTER I

GENERAL

TABLE OF CONTENTS

1. PURPOSE
   1.1 Scope
   1.2 Application

2. GENERAL

3. METRIC UNITS

4. DESIGN POLICY
   4.1 Reference
   4.2 HQUSACE Design Policy
   4.3 CESWD Design Policy
   4.4 Programming and Budgeting
   4.5 Design-Bid-Build with A-E's as Design Agents
   4.6 Design-Build with a single Contractor

5. PROJECT CRITERIA
   5.1 Functional Criteria
   5.2 Economic Criteria
   5.3 Environmental Criteria
   5.4 Technical Criteria

6. TYPES OF DESIGN
   6.1 New Design
   6.2 Site Adapted Designs
   6.3 Standard Designs
   6.4 DA Standard Designs
   6.5 Renovation Projects and Additions

7. SPECIAL INSTRUCTIONS

CHAPTER I

GENERAL

1. **PURPOSE**: The purpose of the Architectural and Engineering Instruction Manual (AEIM) is to provide general design guidance to Architect Engineers (A-E's) working as design agents providing services, designs, construction drawings and specifications pursuant to a contract with Corps of Engineers District Offices located in the Southwestern Division. These Instructions are written for the purpose of assisting designers in the preparation of design documents for military construction and, in as far as is applicable, for civil works construction. The AEIM format is for design using design-bid-build acquisition method. Design guidance in the AEIM is also generally applicable to District design performed by "in-house" Corps of Engineers designers. Technical criteria in are also applicable as required by the project Request for Proposal for design accomplished under the design-build method.

1.1 **Scope:** AEIM contents are limited in scope to technical rather than management aspects of design. Not included in this document are such subjects as: project design management, progress milestones and scheduling, quality control/assurance (except as noted in paragraph 4.3 of this chapter), review procedures, value engineering, handling of classified information, and other procedural/managerial types of instructions and requirements for military design. Contractual requirements for these and other subjects are in Appendix "A," Scope of Services, to the standard contract for Architect Engineer design services.

1.2 **Application**: These instructions apply to the Southwestern Division District Offices and Architect-Engineers working as independent contractors for the Corps of Engineers.

2. **GENERAL**. This chapter covers general design policy, criteria, and types of design. Specific policy and criteria are covered in other AEIM chapters for each major design discipline that typically participates in a project design and in chapters addressing requirements for drawings, specifications, design analyses, and other documents typically produced during the design process.

Note that the format used in this and other chapters of the AEIM is for accomplishing design using the design-bid-build acquisition method. Technical criteria in this AEIM are also

applicable as required by the project Request For Proposals (RFP) for design accomplished under the design-build method. A project RFP may include Performance and/or Prescriptive specifications which allow/require technical criteria that do not follow usual Corps of Engineers design-bid-build criteria. The submittal procedures covered in the AEIM generally do not apply to design-build, except as required by the RFP.

3. **METRIC UNITS** used throughout this document are the International System of Units (SI) adopted by the U.S. Government. New construction and products that are manufactured to metric dimensions or have an industry recognized metric designation are given in hard metric SI values. In other cases both metric SI units and English inch-pound (I-P) measurement is indicated by a SI value followed by the I-P value in parenthesis. The SI value is a mathematical approximation of the I-P value and the I-P value shall govern over the metric measurement. In general, text metric units are in meters for numbers larger than one meter and millimeters for numbers smaller than a meter. On the plates, dimensions of plans, sections, details, member sizes, etc. are in millimeters except as noted.

4. **DESIGN POLICY**. Policies are published in various documents including Engineering Regulations (ER), Army Regulations (AR), Public Laws, Executive Orders, Design Guides (DG), Department of Defense Directives, Policy Memoranda, Engineering Technical Letters (ETL) and others. Most of those applicable to the Corps of Engineers Army MILCON program are available through the Internet at http://www.usace.army.mil/usace.docs/. Air Force Manuals, Regulations (AFR), Design Guides, Technical Letters, and Pamphlets are available through the Internet at http://www.nibs.org/ccb/ccbindex/htm. References listed below are basic policy documents and others are referenced in other AEIM chapters.

4.1 **Reference**:

4.1.1 ER 1110-345-100. Design Policy for Military Construction.

4.1.2 Military Handbook MIL-HDBK 1190, for Air Force designs.

4.1.3 ER 1110-1-12. USACE Engineering and Construction Quality Management.

4.1.4 Architectural and Engineering Instructions(AEI). Cost Control During Design (Design-To-Cost)

4.2 **Headquarters, U.S. Army Corps of Engineers (HQUSACE) design policy** is established by ER 1110-345-100, Design Policy for Military Construction. Directives and accompanying program/project data will be issued through HQUSACE to respective regional Division Commanders. Except for standard designs and elements of medical and housing programs, the design responsibilities of HQUSACE are delegated to Division and District Commanders.

4.2.1 U.S Army Corps of Engineers Metric Design Policy. Projects shall be designed, and plans and specifications shall use the metric system of measurement. Metric requirements for use in the design and for drawings are addressed in ER 1110-345-700, and Corps of Engineers Guide Specification CEGS Section 01415, Metric Measurements, covers the requirements for metric measurements in project specifications. EIRS Bulletin No. 97-01 gives additional guidance on use of metric products. Additions/modifications to existing facilities may be in the English system of units to match the units used in the original facility construction if directed by the supervising district.

4.3 **Southwestern Division design policy** is based upon the above references. The CESWD staff (CESWD-ETEC-T) implements design provisions referenced above as applicable within the region.

4.3.1 District staffs perform all the technical requirements for each phase of design for "in-house" project designs from the earliest design submittal thorough final contract drawings. Districts are responsible for establishing and executing Quality Management Plan (QMP) and project design Quality Control Plans (QCP), including independent technical review, for projects designed by their staff. ER 1110-1-12 and District Standard Operating Procedures contain requirements for QMP and QCP.

4.3.2 Architect-Engineer (A-E) as contract design agents perform design services for work contained in the Scope of Work in the A-E design contract. The A-E is responsible for providing and executing a Design Quality Control Plan (QCP) for their design. The QCP shall be submitted with the fee proposal. Key components of a QCP are given in ER 1110-1-12 and District Standard Operating Procedures available from the District Technical Leader (TL). The A-E shall include in the QCP a time-scaled bar chart or Critical Path Method design schedule showing the sequence of events involved in performing tasks to accomplish the design within the specified time period. The supervising district will serve in a consultative capacity in accordance with the A-E Scope of Work and A-E Contract for A-E project designs providing guidance on technical project criteria

and resolution of technical issues involving criteria. The supervising district will perform Quality Assurance to verify that the A-E produces a quality design within the established schedule and budget.

4.3.3 Southwestern Division staff will execute Quality Assurance to assure that quality designs are being accomplished for designs performed by district "in-house" personnel. The Southwestern Division issues regional design criteria and serves in a technical consultative capacity when requested.

4.4 **Programming and Budgeting.** Using services prepares (or contracts for preparation of) the basic programming and budgeting documents for congressional funding and authorization of the construction project. These documents describe the general functional requirements for the project and provide a basis for funding. These documents are to be reviewed for adequacy by the district prior to issue to the design A-E. Although the design agent has the responsibility for the preparation of their design, the Using Services have final authority concerning functional requirements of the project.

4.5 **Design-Bid-Build with A-E's as design agents.** A-E's as design agents under Title I provide design services to the contracting officer for timely completion of a quality design. Basic responsibilities are set forth in Appendix "A" to the A-E design contract. General guidance is presented in the references in paragraph 4 above, and this manual, the AEIM, covers regional design procedures. Specific criteria will be covered by project design and engineering instructions and project criteria as discussed in paragraph 5 below.

4.6 **Design-Build with a single contractor.** The design-build acquisition method uses a single contractor to perform both design and construction. Basic design-build responsibilities for this are in ER 1180-1-9, Design-Build Contracting, ER 1110-3-104, Family Housing Design, and Engineering Instructions (AEI), Army Family Housing. The Request For Proposals (RFP) for the project will include project criteria including submittal requirements and functional and design technical performance criteria.

5. **PROJECT CRITERIA**. The following forms of criteria will be used. Project criteria will be made available through the assigned district Technical Leader (TL) or obtained by the A-E from the Internet.

5.1 **Functional Criteria** are established by the Using Service

and may be furnished in the form of a DD Form 1391, Project Booklet (PB), Project Development Brochure (PDB), Requirements and Management Plan (RAMP). If the project design has proceeded beyond the initial design phase then submittals such as Charette documentation or Project Definition, Project Engineering, brochures are available. The Using Service and District Project Manager shall assure that sufficient data is furnished concerning personnel capacities and occupancies, operational requirements, access and clearances, life safety and future expansion prior to initial pre-design or site conference. Subsequent to the initial conference, the design agent or A-E shall confirm any missing or questionable data by discipline to expediently proceed with design. Basic space allowances and operational standards are outlined in the references given in paragraph 4 above.

5.2 **Economic Criteria** include both program authorization (project cost limitation) and scope allowance (space limitation) which will be set forth in the funding documents, Project Description and Scope approved by Congress and/or project design or engineering instructions. It is the A-E's responsibility to design the project within these limitations or report to the TL as early as practicable that the project cannot be designed within the authorized program and scope limitations.

5.3 **Environmental Criteria** may be included in the DD Form 1391, PB, PDB, RAMP; however, it is the designer's responsibility to confirm and complete this criteria at the Pre-Design Conference and/or site investigations and to establish any natural, physical or social conditions which would affect the design and to present the design response to such conditions in the project design analysis. Additional guidance on environmental criteria is in Chapters IX and XII in this AEIM.

5.4 **Technical Criteria** for specific design subjects are the responsibility of the design agency and shall be furnished by the TL for the project in the form of AEIM and CESWD Criteria Letters. The AEIM has a chapter giving design guidance for each major design discipline as follows: Civil Chapter II, Architectural Chapter III, Structural Chapter IV, Mechanical Chapter V, Electrical Chapter VI, Geotechnical Chapter XIII, with additional criteria in Chapter IX. Technical criteria published by HQUSACE including Technical Manuals (TMs), Engineering Instructions (EI), Technical Instructions (TI) and Engineering Technical letters (ETL) can be obtained from the Internet at http://www.usace.army.mil/usace-docs/. If additional technical criteria or documents are needed, the A-E shall request the information from the District TL.

6. **TYPES OF DESIGN**. Project Criteria will direct use of varying levels of developed design documents to be used for project economy and standardization as follows:

6.1 **New Design** shall normally be based upon DD Form 1391, PB, PDB, or RAMP documents providing budgetary and programming data. This data is generally developed for project cost estimates (PCE) for funding and establishing general functional relationships for project authorization. Since these documents normally require comprehensive development, designers shall confirm design parameters and design flexibility.

6.2 **Site Adapted Designs** are actual as-built project documents and field standards to be utilized for project design. It should be recognized that most site-adapt documents furnished for project design will require various levels of design development to meet regional, local and project conditions. The use of these documents may range from basic definitive layouts to complete working documents for construction. The A-E contract or project documents shall, therefore, specify the level of site-adaptation expected and explicitly set-forth special design latitude for revising the documents. Where the site-adapted design conflicts with environmental design conditions and sound architectural and engineering practice, the designer shall present recommendations for modifications required to the supervising district Technical Leader for approval action. Refer to the Drafting Chapter for revisions to title blocks.

6.3 **Standard Designs** are national and regional repetitive project documents which are to be utilized as completely as practicable for project design conditions. Analyses of foundations, structural and mechanical systems are normally authorized. Revisions and deviations beyond these shall be reported and submitted for approval through the Technical Leader in the supervising district, to CESWD-ETEC-T to HQUSACE.

6.4 **DA Standard Designs** essentially consist of standard floor plans, typical building sections and special site requirements, without any detailed design developed. Designs are at about the 10% stage. These designs are developed in accordance with ER 15-1-25, USACE Facilities Standardization Committee. Standard design packages are available for about 13 different Army facilities with about 15 others under development. Use of these standards for Army projects is mandatory and will be required by the DD 1391 form. Standards are available through the Internet at http://cadib.wes.army.mil/html/cos/cfusion/MainPage.htm

Deviations from these standards are not permitted without waiver approval.

6.5 **Renovation Projects and Additions** to existing construction are the most difficult to assess for funding and design. Therefore, it is very important for the designer to make thorough site investigations and evaluate project criteria. Establishing the amount of renovation and additional new construction to achieve the optimum balance of improvements at the pre-concept stage requires careful design and construction coordination.

7. **SPECIAL INSTRUCTIONS**. A-E contract documents may emphasize significant items directly pertinent to the project or which require special attention for design quality and review coordination. Essential instructions are provided in this manual.

CHAPTER II

CIVIL

Table of Contents

1. PURPOSE
   1.1 Metrication

2. DESIGN CRITERIA
   2.1 Site Design
      2.1.1 Reference
      2.1.2 Building Siting
      2.1.3 Roads, Streets, Access Drives, and Parking Areas
      2.1.4 Walks
   2.2 Grading
      2.2.1 Reference
      2.2.2 Finished Floor Elevations
      2.2.3 Turfed Areas
      2.2.4 Roads, Streets, Access Drives, Parking Areas, and Walks
      2.2.5 Special Facilities
      2.2.6 Finish Grade Contours & Spot Elevations
   2.3 Pavement
      2.3.1 Reference
      2.3.2 Design
   2.4 Storm Drainage
      2.4.1 Reference
      2.4.2 General
      2.4.3 Determination of Rainfall Runoff
      2.4.4 Drainage Systems
   2.5 Outside Utility Systems
      2.5.1 Reference
      2.5.2 General
      2.5.3 Locations
      2.5.4 Water Distribution
      2.5.5 Sanitary Sewers
      2.5.6 Gas Distribution
      2.5.7 Aircraft and Automotive Fuel Supply and Distribution
      2.5.8 Oil-Water Separators
      2.5.9 Corrosion Control
      2.5.10 Materials
   2.6 Fencing
      2.6.1 Reference
      2.6.2 Requirements

Table of Contents (cont.)

2.7 Railroads
2.7.1 Reference
2.7.2 General

2.8 Turf and Landscaping
2.8.1 Reference
2.8.2 General
2.8.3 Design

APPENDIX A - Plates of Standard Details, Criteria Illustrations, and Storm Drainage Design Aids

APPENDIX B - Design Checklist - Civil

CHAPTER II

CIVIL

1. **PURPOSE**: The purpose of this chapter is to provide information that will clarify and supplement standard criteria and design guidance for the site development aspects of military facilities. The information in this chapter is intended to facilitate efficient preparation and review of designs, ensure uniform and consistent presentation of designs, and minimize or eliminate repetitive design deficiencies. Special instructions will be issued for the design of family housing projects.

1.1 **METRICATION**: The metric units used are the International System of Units (SI) adopted by the U.S. Government as described in Chapter I, paragraphs 3 and 4.2.1. On the plates in this chapter, dimensions are in millimeters except meters are used for typical site layouts for building location, streets, parking, service drives, etc.

1.1.1 Concrete Reinforcement. This document uses metric concrete reinforcement designations conforming to the ASTM A635M-98 SI system.

1.1.2 Pipe Sizes. This document uses both SI and I-P units for pipes. There are some commercial metric pipes available in the market, and the designer should specify the use of hard metric pipe where it is suitable for the project.

1.1.3 Since many storm drainage criteria references and methods have not been converted to metric, design computations may continue to be performed in I-P units with the results presented with dual I-P and SI values. Useful metric conversion factors are as follows:

Metric Conversions

From English I-P	To Metric SI	Multiply by
Acre	Square Kilometer	0.00405
Acre	Hectare	0.405
Square Mile	Square Kilometer	2.590
Cubic Feet per Second	Cubic Meters per Second	0.0283
Feet per Second	Meters per Second	0.3048
Acre-Foot	Cubic Meter	1233.489
Inch	Millimeter	25.4
Inch per Hour	Millimeters per Hour	25.4

2. **DESIGN CRITERIA**:

2.1 **Site Design**: Separate drawings shall be provided for the following site development items: Demolition, Site Layout, Grading including storm drainage structures, Site Utilities, and Turfing and Landscaping. Complete design calculations necessary for that stage of development of the submittal shall be included in the design analysis for site development items such as storm drainage, storm drainage structures and all outside utilities except electrical which should be included in the electrical design analysis. Horizontal and vertical control shall be provided for all new facilities.

2.1.1 Reference:

2.1.1.1 TI 800-01, Design Criteria.

2.1.1.2 MIL-HDBK 1190, Facility Planning and Design Guide.

2.1.1.3 TM 5-803-5, Installation Design.

2.1.1.4 MIL-HDBK-1008C, Fire Protection for Facilities.

2.1.1.5 TM 5-822-2, General Provisions and Geometric Design for Roads, Streets, Walks, and Open Storage Areas.

2.1.1.6 Uniform Federal Accessibility Standards, Federal Register.

2.1.1.7 Americans with Disabilities Act Guidelines

2.1.1.8 TM 5-803-14, Site Planning and Design

2.1.1.9 TM 5-853-2, Security Engineering – Concept Design

2.1.1.10 TM 5-853-3, Security Engineering – Final Design

2.1.2 Building Siting:

2.1.2.1 Building Orientation: Normally, in this Southwestern area, layouts should emphasize orienting buildings to minimize effects of summer solar heat load and to take advantage of the summer prevailing breeze, where feasible, without excessive costs for grading, roads, drainage, landscaping, or other features.

2.1.2.2 Building Setback: One-story buildings usually will be located at least 15 meter from the centerline of 7 meter

to 8.5 meter wide streets. A setback of 21 meter to 30 meter should be provided for wider streets and for larger and taller structures or to resolve topographic grading limitations. Where a permanent building line has been established, it will usually be maintained.

2.1.2.3 Force Protection: The site should be laid out based on the facility threat security level to protect against exterior attack by providing standoff distance between an aggressor or bomb, barriers, and to facilitate visual monitoring of the site. See requirements in TM 5-853-2 and TM 853-3.

2.1.2.4 Building Spacing: Space between structures will provide open areas in accordance with good land-use planning and due consideration of future development plans that will provide an appropriate environment commensurate with the importance of the facility. Fire clearance separations will be maintained in accordance with MIL-HDBK-1008C (Army) or MIL-HDBK-1190 (Air Force). Early in project design (10%), verify e maximum slope of 25%. If it becomes necessary to use slopes steeper than 25% slope protection??shall be provided. T2.1.3

2.1.3 Roads, Streets, Access Drives, and Parking Areas:

2.1.3.1 Geometric Features:. Geometric design of all roads, streets, access drives, and parking areas shall conform to applicable portions of TM 5-803-5, TM 5-803-14, TM 5-822-2, TI 800-01, TM 5-853-2, TM 5-853-3, and the applicable standard detail plates and drawings included in this chapter. Also verify with the local instillation that access for fire equipment is adequate. Access drives, service drives, and entrances to parking areas will not be directly from Class A, B, and C streets unless otherwise unavoidable. Radii, to back of curb, for intersections are standardized as follows for design:

Primary and Secondary Intersection	9 meters
Tertiary intersections (including residential streets)	6 meters
Special:	
Access drives at end parking space	1.5 meters
Curb return at residential driveway	1.5 meters

2.1.3.1.1 Parking: Parking allocations, when not set by the Using Agency, shall comply with the USACE AEI. Handicap parking allocations shall comply with the Uniform Federal Accessibility Standards. Perimeter concrete curbs and gutters will normally be provided for all parking areas and access drives in built-up areas. In remote or little used areas, concrete curbs and gutters will be used only when required to control drainage. Where flexible pavements are used, removable prefabricated reinforced concrete wheel stops, as approved, may be used. Wheel stops may be used around the perimeter of flexible paved parking areas for the following or similar facilities:

USAR military equipment parks.

Outlying training areas such as field stations and range facilities.

Industrial facilities such as warehouses, shops, motor parks, technical facilities and storage areas.

2.1.3.1.2 Service Drives: Service drive design should be as simple as criteria, function, and location justify. Width of drives to unloading ramps or docks for usual types of trucks or tractor trailers are:

Trucks, SU = 3.6 meters

Semi-trailers, C43 to C50 = 4.8 meters

2.1.3.1.3 Pavement at Loading Platforms: The minimum paved area depth in front of loading platforms at warehouses and storage facilities shall be as follows:

For van-type (SU) trucks = 20 meters, including street width.

For semi-trailer, (C43 to C50) = 26 meters, including street width (Depots = 29 meters)

The first 6 meters adjacent to the platform shall be concrete.

2.1.3.1.4 Pavement at POL Facilities: Concrete pavement at least 4.5 meters wide shall be provided adjacent to fill stands. Prevent fuel spillage from entering either the underground storm or sanitary sewer systems, or from being impounded within 30 meters of any structure.

2.1.3.1.5 Access Roads at Ammunition Storage Areas: Primary access roads at ammunition storage areas shall be 6.7 meters wide. Service roads within the storage area shall be 5.5 meters wide.

2.1.3.1.6 Pavement at Dumpster Pads: The first 4.5 meters of pavement adjacent to dumpster pads shall be concrete.

2.1.4 Walks:

2.1.4.1 General: Provide an ample functional system of walks connecting structures, operational areas, parking areas, streets and other walks as pedestrian traffic demands. The location and width will give full consideration to the master plan future development. Design of pedestrian walks shall be in compliance with TM 5-803-5, TM 5-803-14, TM 5-822-2, and criteria presented herein. Walks subject to use by the physically handicapped shall meet the requirements of the Uniform Federal Accessibility Standards.

2.1.4.1.1 Location: Walks paralleling buildings will be located beyond the eave drip line and at least 1.5 meter from the foundation. Walks paralleling parking areas will be at least 1.8 meter wide, and will abut the back of the curb.

2.1.4.1.2 Width: Minimum walk width will be 1.2 meter with 600 mm incremental increases as required to accommodate pedestrian traffic. Building entrance walk widths will be appropriate for the building entrance design. The following table is for general guidance in selecting the appropriate walk width for selected facilities.

TABLE I

Facility	Width of Walk			
	Main 1/ Entrance	Secondary Entrance 1/ or Exit 2/	Collection	Service
Barracks	2.00m	1.25m	2.00m 4/	1.25m
BOQ	2.00m	1.25m	2.00m	1.25m
Mess	2.50-3.75m 3/	1.25m	2.00-2.50m	1.25m
Theaters	3.00-3.75m 3/	2.00m	2.00-2.50m	1.25m
Clubs	2.50-3.00m 3/	2.00m	2.00m	1.25m
Hospitals	2.50-3.00m 3/	2.00m	2.00-2.50m	1.25m
Chapels	2.50-3.00m 3/	2.00m	1.25m	1.25m
Family Housing	1.25m	1.25m	2.00m	1.25m
Administrative	2.00m	1.25m	2.00m	1.25m

NOTE:

1/ Widen near building to equal width of building entry way, steps, platform, etc.

2/ Provide no walks to emergency (fire) exists.

3/ For short distance near buildings.

4/ When serving over 1,000 men, see TM 5-822-2, paragraph 3.4.4, for increased width.

2.1.4.1.3 Construction: Walks shall be constructed of concrete unless otherwise directed. Construction details shall comply with the standard detail plates included in this chapter.

2.1.4.1.4 Special Walks: A Troop formation walk 3 meters wide and 18 meters long per 100 men will be provided near each dormitory (preferably in front). The length may be increased for short distances to reach a nearby walk intersection.

2.2 **Grading**:

2.2.1 Reference:

2.2.1.1 TI 800-01, Design Criteria

2.2.1.2 TM 5-822-2, General Provisions for Geometric Design for Roads, Streets, Walks and 0pen Storage Areas.

2.2.1.3 TM 5-803-7, Civil Engineering Programming Airfield and Heliport Planning Criteria.

2.2.1.4 TM 5-848-2, Handling of Aircraft and Automotive Fuels.

2.2.1.5 TM 5-803-5, Installation Design.

2.2.1.6 Uniform Federal Accessibility Standards, Federal Register.

2.2.2 Finished Floor Elevations: The establishment of a building's finished floor elevation shall be based on subjective as well as objective judgments. On many projects, the preservation of existing trees, natural ground forms, and drainage patterns is of prime importance. Normally, the finished floor elevation will be primarily determined on the basis of economics, considering the type of foundation, crawl space vents, building space, access for vehicles and handicapped personnel, elevations of sewer mains and storm drainage receptor, existing and future adjoining facilities, access to borrow and waste areas, flood profiles, and the site's geology as well as its topography. A building's finished floor elevation will be a minimum of 300mm above the highest point of the adjacent outside finished grade, unless there is an overriding technical reason to deviate. Where adequately protected from any localized storm drainage flows, the finished floor elevation of family housing and buildings surrounded by pavement may be set a minimum of 200mm above outside finished grade.

2.2.3 Turfed Areas:

2.2.3.1 Adjacent to Building: Outside finished grade will slope away from the building at a 5% grade for the first 3 meters. The 5% grade should be extended to 6 to 9 meters in areas with highly expansive soil. When site conditions require the use of steep slopes near buildings, a berm a minimum of 2 meters wide at a 5% grade will be provided adjacent to the building. These requirements should be indicated on the grading plan with critical spot elevations. Where the adjacent outside grade is brought above the building floor level for energy conservation, aesthetic, or economic reasons, the outside finished grade shall slope down from the wall line at a 20% minimum grade for at least 1.5 meter, and a maximum grade of 25%.

2.2.3.2 Lawn Areas: Lawn areas 3 meters beyond the building line) shall have a 2% minimum slope and a desirable maximum slope of 25%. If it becomes necessary to use slopes steeper than 25% slope protection shall be provided. The type and amount of slope protection provided shall be based on the soil type, slope length, and aesthetic, environmental, and economic considerations.

2.2.3.3 Ditches and Swales: The preferred minimum longitudinal ditch or swale gradient is 0.5 percent with an absolute minimum of 0.3%. Side slopes on ditches or swales will be no steeper than l vertical on 2-1/2 horizontal. Steeper slopes shall be paved.

2.2.4 Roads, Streets, Access Drives, Parking Areas and Walks:

2.2.4.1 Roads, Streets, and Access Drives: Gradients for roads, streets and access drives shall be as outlined in TM 5-803-14 and TM 5-822-2. Grade changes in excess of 1% will be accomplished by means of vertical curves. The length of vertical curves will be determined in accordance with TM 5-803-14, and TM 5-822-2. Profiles are mandatory for vertical control of centerline gradients. Roads, streets and highways will normally be shown by the use of half-plan/half-profile type drawings.

2.2.4.2 Parking Areas: Pavement grades shall provide positive surface drainage with a 1% minimum slope in the direction of drainage. Slope grade in direction of parking 1-1/2% maximum for 90 degree parking, 1% maximum for 60 and 40 degree parking. Slope grade perpendicular to direction of parking 5% maximum for bituminous or concrete surfaces and 3% for other surfaces.

2.2.4.3 Walks: The grade of walks will be in accordance with TM 5-803-14. Steps in walks should be avoided, but when used shall be in compliance with TM 5-822-2. Walks and ramps serving facilities that are to be accessible to and usable by the physically handicapped shall meet the requirements of the Uniform Federal Accessibility Standards.

2.2.5 Special Facilities:

2.2.5.1 Airfields: Gradients shall be as specified in TM-803-7.

2.2.5.2 Fuel Loading/Unloading Facilities: Gradients shall be as described in TM 5-848-2.

2.2.6 Finish Grade Contours and Spot Elevations: Finish grade contours at 0.25 meter intervals and spot elevations shall be provided to construct all site development features to elevations within the above grading criteria and tolerances as specified in the guide specifications. Spot elevations on the drawings should be sufficient so that interpolation between contours is not required for structures, grading or paved areas; some examples are: corners of paved areas, low points, high points, flow lines of swales or ditches, changes in degree of slope and grading at corners of buildings to ensure positive drainage away from the building. The use of cut or fill symbols in lieu of finish grade contours is not permitted.

2.3 **Pavement**:

2.3.1 Reference:

2.3.1.1 TM 5-822-5, Pavement Design for Roads, Streets, Walks, and Open Storage Areas.

2.3.1.2 DG 1110-3-204, Design guide for Army and Air Force Airfields, Pavements, Railroads, Storm Drainage and Earthwork.

2.3.1.3 TM 5-823-3, Rigid and Overlay Pavement Design.

2.3.1.4 TM 5-825-2, Flexible Pavement Design for Airfields.

2.3.1.5 TM 5-825-3, Rigid Pavements for Airfields.

2.3.1.6 TI 800-01, Design Criteria.

2.3.1.7 DG 1110-3-204,(AFP 88-71), Design Guide for Army and Air Force Airfields, Pavements, Railroads, Storm Drainage and Earthwork.

2.3.2 Design:

2.3.2.1 General: The design of the pavement structure will be accomplished by the district and the data will be furnished to the designer. This information will be attached to Part II - Civil, of the design analysis. TI 800-01 outlines general engineering criteria for designing airfield pavements for facilities at Army installations.

2.3.2.2 Flexible Pavement: Design and details of construction of flexible pavements shall be in accordance with TM 5-822-5, TM 5-825-2, and the details shown on the standard

plates included in this chapter. Do not concentrate storm runoff on flexible pavement. If swales are necessary within flexible pavement, concrete valley drains shall be provided.

2.3.2.3 Rigid Pavement: Design and details of construction of rigid pavement shall be in accordance with TM 5-822-5, TM 5-823-3, TM 5-825-3, DG 1110-3-204 and the details shown on the standard detail plates included in this chapter. A joint pattern will be provided for all rigid pavements. When more than one type of joint is used, the joint pattern shall clearly distinguish between types of joints and include a cross-reference to the appropriate joint detail shown elsewhere in the plans. The edge of rigid pavement where future construction will occur shall be a thickened edge for pavements 200mm or less in thickness, and shall be a keyed construction joint for pavements thicker than 200mm. The joint pattern shall provide sufficient vertical control information capable of providing accurate elevations for the setting of paving forms.

2.4 **Storm Drainage**:

2.4.1 Reference:

2.4.1.1 TM 5-820-1, Surface Drainage Facilities for Airfields and Heliports.

2.4.1.2 TM 5-820-2, Subsurface Drainage Facilities for Airfield pavement.

2.4.1.3 ETL 1110-3-345, Drainage Layers for Pavements.

2.4.1.4 TM 5-820-3, Drainage and Erosion Control Structures for Airfields and Heliports.

2.4.1.5 TM 5-820-4, Drainage for Areas Other than Airfields.

2.4.1.6 U.S. Weather Bureau Technical Paper No. 40, May 1961, Rainfall Frequency Atlas of the United States for Durations from 30 minutes to 24 hours and return periods from 1 to 100 years.

2.4.1.7 NOAA Technical Memorandum NWS HYDRO-35, June 1977, Five to 60-minute Precipitation Frequency for the Eastern and Central United States.

2.4.1.8 Rainfall Intensity - Duration - Frequency Curves available from the District Office.

No.	Title	Use At
1	Abilene, Texas	Dyess AFB
2	Alamogordo, New Mexico	Holloman AFB
3	Albuquerque, New Mexico	Kirtland AFB
4	Altus, Oklahoma	Altus AFB
5	Amarillo, Texas	
6	Austin, Texas	Bergstrom AFB
7	Big Spring, Texas	
8	Brownsville, Texas	
9	Clovis, New Mexico	Cannon AFB
10	Dallas, Texas	
11	Del Rio, Texas	Laughlin AFB
12	El Paso, Texas	Fort Bliss
13	Fort Polk, Louisiana	Fort Polk
14	Fort Smith, Arkansas	Fort Chaffee
15	Fort Worth, Texas	Carswell AFB
16	Gallup, New Mexico	Fort Wingate
17	Houston, Texas	Ellington AFB
18	Killeen, Texas	Fort Hood
19	Las Cruces, New Mexico	White Sands Missile Range
20	Lawton, Oklahoma	Fort Sill
21	Little Rock, Arkansas	Little Rock AFB Pine Bluff Arsenal
22	Lubbock, Texas	Reese AFB
23	Memphis, Tennessee	Blytheville AFB
24	Oklahoma City, Oklahoma	Tinker AFB, Vance AFB
25	San Angelo, Texas	Goodfellow AFB
26	San Antonio, Texas	Brooks AFB, Fort Sam Houston, Kelly AFB, Lackland AFB Randolph AFB
27	Santa Fe, New Mexico	SantaFe National Cemetery
28	Shreveport, Louisiana	Louisiana AAP Longhorn AAP
29	Texarkana, Arkansas	Lone Star AAP Red River AAP
30	Wichita Falls, Texas	Sheppard AFB

NOTE: For those areas not covered by the curves available from the District, references in paragraphs 2.4.1.6 and 2.4.1.7 will be used to obtain the rainfall intensity.

2.4.2 General: The design of storm drainage facilities for airfields will be in accordance with TM 5-820-1 and TM 5-820-3. The design of storm drainage facilities for areas other than airfields shall be in accordance with TM 5-820-4, except as modified or supplemented by this chapter. Profiles

shall be required for underground storm drainage systems and sections shall be required for culverts.

2.4.3 Determination of Rainfall Runoff:

2.4.3.1 Methods: Runoff from drainage areas of 2.6 km^2 (1 square mile) or less will be determined by the use of the Rational Formula as defined below. For drainage areas larger than 2.6 km^2 (1 square mile) when unit-hydrograph data is available or where detailed consideration of ponding is required, computation should be by unit-hydrograph and flow-routing procedures.

Rational Formula: $Q = C(I-F)A$, where

- Q is the discharge in cubic feet per second
- C is the terrain factor
- I is the rainfall intensity in inches/hour
- F is the infiltration rate in inches/hour
- A is the drainage area in acres

TABLE II

MINIMUM VALUES FOR SOLVING FOR Q IN THE ABOVE EQUATION

Drainage Area (% Paved)	tc (Minutes)	C	F
100	10	1.00	0.0
90	11	.96	.06
80	12	.92	.12
70	13	.88	.18
60	14	.84	.24
50	15	.80	.30
40	16	.76	.36
30	17	.72	.42
20	18	.68	.48
10	19	.64	.54
0	20	.60	.60

2.4.3.2 Design Storm Frequencies: Design storm frequencies shall be in accordance with TM 5-820-1 or TM 5-820-4, as applicable.

2.4.3.3 Time of Concentration (tc): The nomograph shown on Plate C73 in this chapter is recommended for use in determining the time of concentration. The minimum times of concentration for various surfaces are as follows: turfed areas, 20 minutes; paved areas, l0 minutes; roofed areas, 10 minutes. After the time of concentration has been determined, it will be used to determine the rainfall intensity (I) using Intensity Duration curves.

2.4.3.4 Design Discharge: For small drainage systems (tc = 30 minutes/or less), "peak on peak" discharges shall be used to determine the design discharge; for large drainage systems (tc greater than 30 minutes) phased discharges shall be used for major trunk lines, and peak discharges for inlets and minor lines.

2.4.3.5 Calculations: Calculations used to determine the discharge shall be tabulated on the form on Plate C-74 in Appendix A; or similar.

2.4.3.6 The Hydrologic Engineering Center (HEC) located at Davis, California has developed computer programs to compute runoff using unit hydrograph procedures. Information on these and other programs that apply unit-hydrograph and flow-routing procedures can be obtained from the supervising district’s Hydrology and Hydraulics staff through the Technical Leader.

2.4.4 <u>Drainage Systems</u>:

2.4.4.1 General: The drainage system layout will be designed to best meet the operational requirements of the facility. The system will be as economical as practicable, taking into consideration topography, ultimate development of drainage area, possible future extension, outfall locations, and coordination with existing drainage systems and other existing or future underground utilities.

2.4.4.2 Surface Systems:

2.4.4.2.1 Street Drainage: Street drainage will usually be accomplished by the use of curb and gutter and curb inlets. Curb gaps will be considered in areas where roadside ditches are used. The center one-third of the street should not convey runoff during the passing of the design storm. Inverted crown sections for the streets shall not be used

without prior approval. Curb inlets should not be located in the radius of street intersections, at curb returns, or where pedestrian traffic is most likely to occur.

2.4.4.2.2 Channels: The preferred minimum gradient shall be 0.5% with an absolute minimum of 0.3%. Coefficients of roughness, "n", and maximum permissible velocities for various surfaces are listed in Table III.

2.4.4.2.3 POV Parking and Hardstands: Do not concentrate the flow of storm runoff on asphalt pavement. Convey storm runoff within POV parking areas to perimeter curbs by sheetflow. If it becomes necessary to concentrate flow within the parking area, provide concrete paving at the swale flowline. Concentrated flow will not be permitted to flow from POV parking or hardstand areas onto adjacent gravel areas or turfed slopes. Sheetflow from parking areas and hardstands onto adjacent gravel or turfed areas must be examined for possible erosive effects. A recommended method for evaluation and prevention of such erosion is shown on Plate C-77 of this chapter. Due to the large size of hardstand areas at motorpools, runoff will normally be best managed by a design approach limiting the size of areas drained by sheetflow and intercepting runoff by drainage structures placed either within the hardstand or at the pavement edge. For motorpool-type projects at Fort Polk, this design approach is mandatory.

2.4.4.2.4 Culverts: The preferred gradient of culverts shall be 0.5% with an absolute minimum of 0.3%. Concrete headwalls or end sections will be provided for all culverts.

2.4.4.2.5 Sizing of Culverts: Culverts shall be designed in accordance with TM 5-820-4, Appendix B. Inlet versus outlet control for culverts shall be determined and included in the Design Analysis.

TABLE III

SUGGESTED COEFFICIENTS OF ROUGHNESS ("n") AND MAXIMUM PERMISSIBLE MEAN VELOCITIES FOR OPEN CHANNELS, DITCHES AND SWALES IN MILITARY CONSTRUCTION

MATERIAL	Maximum Mean Manning's "n"	Velocity(mps)
Concrete, with surfaces as indicated:		
Formed, no finish ----------	.015	---
Trowel finish ----------	.012	---
Float finish ----------	.013	*
Gunite, good surface ---------	.020	*
Concrete, bottom float finished, sides as indicated:		
Cement rubble masonry	.030	*
Cement rubble masonry, plastered	.024	*
Rubble lined, uniform section	0.035-0.045	2.13-3.96
Asphalt:		
Smooth	0.013	3.05
Rough	0.016	2.44-2.74
Earth, uniform section:		
Sandy silt, weathered	0.035	0.61
Silt clay	0.030	1.07
Soft shale	0.035	1.07
Clay	0.030	1.83
Soft sandstone	0.040	2.44
Gravelly soil, clean	0.040	1.83
Natural earth, with vegetation	0.035-0.150	1.22 - **

* Velocities should be less than critical and based on cross section shape and slope of channel.

** For projects at Fort Polk, velocity shall not exceed 1.2 mps.

NOTE:
Selection of "n" values should reflect anticipated maintenance conditions and the selection of maximum permissible mean velocity should reflect conditions to be expected following construction.

2.4.4.3 Underground Systems:

2.4.4.3.1 General: Whenever possible, pipe crowns will be matched in elevations. Profiles of pipes should show all existing and new underground utilities and pertinent surface features. The minimum pipe gradient shall be 0.3%, and piping should be designed to provide a minimum velocity of 0.75 mps and limit outfall velocities to non-erosive values (usually 1.2 to 1.8 mps depending upon soil types). If non-erosive velocities cannot be attained, erosion protection shall be provided.

2.4.4.3.2 Sizing of Inlets: The design of surface inlets and curb inlets shall be in accordance with TM 5-820-4.

2.4.4.3.3 Sizing of Pipes: New underground storm drainage pipes shall be sized by computation of backwater surface profiles, using a form similar to form shown on Plate C-75 in Appendix A of this chapter. The minimum, pipe size shall be 305 millimeters (12 inches), unless the pipe is a part of the roof drain system, in which case the minimum size of laterals and collector pipes is 102 millimeters (4 inch). Materials for drainage and collector pipes shall conform with guide specification requirements. The following notes are furnished concerning use of the form:

- Calculations will begin at the lower end of the new system. Determine the elevation of the water surface at the outfall, or assume that the hydraulic gradient is at the crown of the pipe, whichever is higher.

- If the hydraulic gradient goes below the invert of a section of pipe, at the next structure upstream, set the hydraulic gradient elevation equal to the critical depth of the downstream pipe or the hydraulic gradient elevation, whichever is greater.

- To determine the loss coefficient "K" at structures (Column 11), allow a loss of 0.10 for each of the following:

... Manhole or inlet structure
... Each additional incoming line
... Inflow at the structure (surface inlet, etc.)
... Change in pipe alignment
... Change in pipe slope
... Change in pipe size

- Designers are warned that the coefficient of friction "n" varies significantly for the various piping materials listed in the specifications. The designer shall verify that pipes are properly sized for all piping materials included in the project specifications. Separate backwater computations should be performed for concrete and unlined corrugated metal pipes to ensure that pipe sizes are compatible with material options. Variations in pipe sizes required by such computations shall be indicated on the plans.

- When phasing of discharges is required (see paragraph 2.4.3.4), computations shall be tabulated on a form similar to Plate C-76 in appendix A to this chapter.

2.4.4.4 Subsurface Drainage: The district will usually be aware of field conditions requiring subsurface drainage and will provide the designer with sufficient soil and flow information to design the system. Design of such facilities will be in accordance with TM 5-820-2 and ETL 1110-3-535.

2.4.4.5 Roof Drainage: Downspouts will be connected to an underground collection system whenever a new or existing underground storm drainage system is in the vicinity of the new facility. Storm water will not be discharged into sanitary sewers. Grading adjacent to structures shall direct storm water discharged from downspouts onto splash blocks away from the structure, and protective measures will be provided where down spouts discharge onto erosion susceptible soils or gravel surfaces.

2.5 **Outside Utility Systems**:

2.5.1 Reference:

2.5.1.1 HQUSACE Architectural and Engineering Instructions - Design Criteria (USACE AEI).

2.5.1.2 MIL-HDBK-1008C, Fire Protection for Facilities

2.5.1.3 TM 5-813-1, Water Supply, Sources and General Considerations.

2.5.1.4 TM 5-813-3, Water Supply, Water Treatment.

2.5.1.5 TM 5-813-4, Water Supply, Water Storage.

2.5.1.6 TM 5-813-5, Water Supply, Water Distribution Systems.

2.5.1.7 TM 5-814-1, Sanitary and Industrial Wastewater Collection - Gravity Sewers and Appurtenances.

2.5.1.8 TM 5-8l4-2, Sanitary and Industrial Collection - Pumping Stations and Force Mains.

2.5.1.9 TM 5-814-3, Domestic Wastewater Treatment.

2.5.1.10 TM 5-848-1, Gas Distribution.

2.5.1.11 TM 5-848-2, Handling of Aircraft and Automotive Fuels.

2.5.1.12 TM 5-630, Natural Resources and Land Management.

2.5.1.13 ASCE - Manual and Reports on Engineering Practice, No. 37, Design and Construction of Sanitary and Storm Sewers.

2.5.2 General:

2.5.2.1 No main, principal line, or part of a utility system should be located or sized without first considering future construction as proposed by the master plan. Extensions of existing utility mains should take future loads into consideration to evaluate the cost of overbuilding.

2.5.2.2 Most utility services in built-up areas shall be underground, with the possible exception in warehouse and industrial areas where above ground service will not conflict with the architectural character.

2.5.2.3 TI 800-01 outlines general criteria for siting of utilities for facilities at Army installations.

2.5.3 Locations:

2.5.3.1 Underground utility lines such as sanitary sewer, water, and gas, should not be placed under existing or proposed pavements, but preferably between back slope of road ditch and building, or back of curb. Such utilities may also be located along approximate centerline of larger blocks. Diagonal alignments in future construction areas should be avoided. See TM 5-813-5 for relative location of water and sanitary sewer lines.

2.5.3.2 Do not locate above ground utility features in front of, or in such a manner as to detract from the facility, make landscaping more difficult, or restrict or negate close-in recreational areas (e.g., a fire plug placed in the middle of

a planned court and recreational area between buildings will void the primary purpose of the court).

2.5.3.3 High pressure gas lines shall not be closer than 30 meters from an occupied building without special protective provisions.

2.5.4 Water Distribution: Design shall be in accordance with TM 5-813-1, TM 5-813-5, and MIL-HDBK-1008C and AFM 88-10, Chapter 6. When existing water mains are extended, the necessity for pressure tests, leakage tests, and sterilization of the new portions creates need for valves for isolation of the extensions from existing lines. Project designs shall include provisions for valves to be installed, if none exist, at points where new extensions connect to existing mains. The valves will be available for future use to aid in isolating areas of the distribution system as indicated in paragraph 12, TM 5-813-5. Engineering studies shall be made to determine validity of indicated exceptions to these valve requirements in special cases such as a very short extension or where a valve was previously provided a short distance from the end of an existing main.

2.5.4.1 Domestic: Velocities in water lines shall be kept under 2 meters per second to prevent possible water hammer effects. Meters shall be provided when requested by the using service.

2.5.4.2 Fire Protection: Design shall be in accordance with the applicable sections of the references listed and the National Fire Codes prepared by the National Fire Protection Association. Post indicator valves (PIV's) for fire protection sprinkler systems will be installed according to NFPA 24 and in locations that minimize the risk of mechanical damage. If this is not possible, bollards or guardrails will be used to protect the PIV's. Where valves cannot be properly guarded or they will interfere with user operations, outside screw-and-yoke valves in pits will be used. The installation fire department will be consulted on the need for and type of valve supervision.

2.5.4.3 Turf and Landscape Irrigation: For projects where irrigation systems are authorized, preparation of plans and specifications to provide such facilities will be accomplished by the designer of the turf and landscaping. Irrigation system design will normally consist of a performance specification and a site plan delineating limits and types of required coverage. Application rates will be in accordance with Section VI of TM-5-630. Specific system requirements

(type of valves, controller, etc.) will be obtained from the Using Service.

2.5.4.4 Provide profiles for water distribution and supply lines when crossings of other new or existing underground utilities will occur and the crossings are not otherwise profiled.

2.5.5 Sanitary Sewers: Design shall be in accordance with TM 5-814-1 and ASCE Publication No. 37. The design should ensure flow velocities that will maintain self-cleansing action. Provide invert elevations for all cleanouts and manholes. Provide profile for all sewers involving more than one manhole.

2.5.6 Gas Distribution: Design shall be in accordance with TM 5-848-1. Provide meters, when requested, by the using service.

2.5.7 Aircraft and Automotive Fuel Supply and Distribution: Design shall be in accordance with TM 5-848-2.

2.5.8 Oil-Water Separators:

2.5.8.1 General: Oil-water separators will be provided for the pretreatment of wastewater containing free-floating oils and grease prior to discharge into sanitary sewers. In addition to the requirements below, the designer shall determine the pretreatment limits required by the receiving wastewater utility and shall be selected or designed to meet these discharge limits.

2.5.8.2 Prepackaged Separators: The use of manufactured, prepackaged separators, through utilization of a performance-type specification, is recommended for the pretreatment of wastewater such as that collected by floor drains in maintenance shops. In such cases, attention must be given to the anticipated flow rate and the quantity of dirt and grit contained in the wastewater. High-volume wastewater containing large amounts of solids will usually require design of a cast-in-place separator as discussed below.

2.5.8.3 Cast-in-Place Separators: Cast-in-place reinforced concrete separators will normally be required for the pretreatment of wastewater generated at outdoor facilities such as washracks. Such separators are usually more economical than commercially manufactured separators designed to treat the high flow rates characteristic of these types of facilities. Where large quantities of sediments are expected,

a grit chamber will be provided either upstream of the separator, or integrally with the separator at the upstream end of the separator. In all cases, when the flow rate resulting from storm runoff significantly exceeds the normal operating flow rate, a bypass will be included in order to divert the storm water into the storm drainage system instead of allowing it to flow into the treatment system. Design of cast-in-place oil/water separators will generally conform to Chapters 5 and 6 of the American Petroleum Institute's Manual on Disposal of Refinery Wastes and will provide minimum detention times for Army projects. Standard configurations and design parameters developed from the referenced publications are shown on Plates C70, C71 and C72 of Appendix "A" of this chapter. Slotted, rotation-type or belt type oil skimmer and waste oil storage tanks will be provided in accordance with user requirements.

2.5.9 Corrosion Control:

2.5.9.1 General: Cathodic protection shall be provided as required by Chapter VI (Electrical) of this manual.

2.5.9.2 Cathodic protection is not normally required for cast iron pipe, ductile iron pipe, or other metal gravity storm drain or gravity sanitary sewer lines.

2.5.10 Materials: Provide all viable pipe options listed in the specifications.

2.6 **Fencing**:

2.6.1 Reference:

2.6.1.1 FM 19-30, Physical Security.

2.6.1.2 AFM 86-2, Standard Facility Requirements.

2.6.1.3 TM 5-853-1, Security Engineering – Project Development

2.6.1.4 TM 5-853-2, Security Engineering – Concept Design

2.3.1.5 TM 5-853-3, Security Engineering – Final Design

2.6.2 Requirements: Fencing will follow the general outline established in FM 19-30 and AFM 86-2. The using service will establish the type, height, and extent of fencing required. Plates C1 and C2 of Appendix A of this chapter show standard

details of unsensored security fences. Details of sensored fences are available on the Internet through the Corps of Engineers TECHINFO system.

2.7 **Railroads**:

2.7.1 Reference:

2.7.1.1 TM 5-850-2, Railroad Design and Rehabilitation.

2.7.1.2 American Railway Engineering Association (AREA) Manual.

2.7.2 General: Design shall be in accordance with TM 5-850-2 and the AREA Manual. Type of service required will be provided by the using service.

2.8 **Turf and Landscaping**:

2.8.1 Reference:

2.8.1.1 TM 5-803-13, Landscape Design and Planting Criteria.

2.8.2 General:

2.8.2.1 The livability and pleasantness of appearance of a military installation can be vastly improved by the judicious selection and placement of trees, shrubs, and grassed areas. The tendency to over plant when landscaping should be avoided. Plantings shall be planned to not provide a hiding place for terrorists aggressors to hide or place a bomb to attack the facility. See criteria in TM 5-853-1, TM 5-853-2 and TM 5-853-3. Plate C4 in Appendix A of this chapter contains typical landscape details.

2.8.2.2 Cost estimates developed in the planning and programming stages must include provisions for erosion control, landscaping, and irrigation facilities where appropriate.

2.8.3 Design:

2.8.3.1 Particular emphasis shall be placed on utilizing plants that are adaptable to the Southwest. Plants selected shall minimize the need for irrigation while maximizing the cooling benefits (e.g., shading windows and condensing units). Consideration shall be given to minimizing the problems caused

by the run-off of rainwater through the use of pavers with voids that permit absorption into permeable soils.

2.8.3.2 Erosion control and landscaping shall be completely coordinated with the other site development elements, even though landscaping may be contracted apart from the project and its site development work. Standards of the appropriate technical specialty shall be followed. For additional landscape design guidance refer to Architectural Chapter III.

APPENDIX A

CHAPTER II

STANDARD DETAILS, CRITERIA ILLUSTRATIONS, STORM DRAINAGE DESIGN AIDS

1. Plates C1 through C4 are standard designs available on CADD. These plates may be obtained from the district supervising the design.

2. Plates C5 through C72 illustrate criteria, and show standard details that should be incorporated into the design where appropriate. Criteria illustrations included in this section are intended to clarify specific criteria requirements that are stated elsewhere in this chapter or appear in criteria referenced herein. The standard details represent many of the commonly used details required in military designs. It is to be noted that many of the details are of general nature and will require some editing to fit specific design requirements.

3. Plates C73 through C77 are design aids for storm drainage computations. Plates C74 through C76 typically should be included in the design analysis to present the storm drainage computations. Alternative/equivalent ways of presenting the drainage computations may be used provided they clearly show the analysis in a way that an engineer may review it.

TABLE OF CONTENTS

Plate No.	Title
	CHAINLINK FENCE
C1	Chainlink Security Fence Details
C2	Chainlink Fence Gate Details
	TRAFFIC METAL BEAM GUARDRAIL
C3	Metal Beam Guard Fence Details
	LANDSCAPING
C4	Landscape Details
	PARKING AREAS
C5	Parking Area and Drive Distances from Streets, Intersections and Buildings
C6	Typical Service Drive Turn-Around
C7	P.O.V. Parking Area - Layout Standards
C8	P.O.V. Parking Area - Notes to Designer
C9	End Island Detail I
C10	End Island Detail II
C11	End Island Detail III
C12	Typical Sections of Divider Strips
C13	Wheel Stop Details
	TRAFFIC SIGN POST
C14	Traffic Sign Mounting Details
	SIDEWALKS
C15	Handicapped Curb - Ramp Details
C16	Sidewalk Details
C17	Concrete Sidewalk Intersection Details
C18	Sidewalk Drain Details
	SPLASH BLOCK
C19	Splash Block Detail
	MOW STRIP
C20	Concrete Mow Strip Detail

TABLE OF CONTENTS (cont.)

Plate No.	Title
	DUMPSTER PAD
C21	Dumpster Pad Detail
	VEHICULAR PIPE GUARD
C22	Pipe Guard Detail
	ROADWAYS AND PAVEMENT
C23	Typical Road Section - Rigid
C24	Typical Road Section - Flexible
C25	Typical Road Section - Gravel
C26	Construction Joints (Plain Concrete Pavement)
C27	Contraction Joints (Reinforced Pavement)
C28	Contraction Joint (Plain Concrete Pavement)
C29	Construction Joints (Reinforced Pavement)
C30	Joint Sealant Details – Roads, Streets, and Open Storage Areas
C31	Expansion Joints
C32	Juncture of New Flexible and New Rigid Pavement
C33	Juncture of New Rigid and Existing Flexible Pavement
C34	Juncture of New Flexible and Existing Rigid Pavement
C35	Juncture of New Flexible and Existing Flexible Pavement
C36	Concrete Header Detail
C37	Rigid Pavement With Curb and Gutter
C38	New Flexible Pavement With Curb and Gutter
	CURB AND GUTTER
C39	New Curb and Gutter Abutting Existing Flexible Pavement
C40	New Curb and Gutter Abutting Existing Flexible Pavement
C41	Standard Barrier Type Concrete Curb and Gutter
C42	Mountable Concrete Curb and Gutter
C43	Curb Terminal Detail

TABLE OF CONTENTS (cont.)

Plate No.	Title
	PAVEMENT REMOVAL AND REPLACEMENT FOR UTILITY INSTILLATION
C44	Pavement Replacement Detail (Rigid Pavement)
C45	Pavement Replacement Detail (Flexible Pavement)
	STORM DRAIN MANHOLE
C46	Standard Manhole Details
C47	Precast Storm Drain Manhole
	STORM DRAIN INLET
C48	Standard Curb Inlet Details
C49	Mountable Curb Inlet Details
C50	Standard Surface Inlet
C51	Surface Inlet Grate and Frame
	STORM DRAIN HEADWALL
C52	Type A Concrete Headwall for Concrete Pipe (Single Pipe - 90 Deg.)
C53	Type B Concrete Headwall for Concrete Pipe (Multiple Pipes - 90 Deg.)
C54	Table of Dimensions - Type A&B Concrete Headwalls
C55	Table of Dimensions - Type A&B Concrete Headwalls
	STORM DRAIN CURB GAP
C56	Curb Gap With Pad
C57	Curb Gap With Chute
	SANITARY SEWER
C58	Sanitary Sewer Manhole Notes
C59	Sanitary Sewer Manhole Details (Cast-In-Place)
C60	Sanitary Sewer Manhole Details (Precast Concrete)
C61	Sanitary Sewer Manhole Details (Precast Concrete)
C62	Typical Section - Drop Type Sewer Connection
C63	Typical Cleanout (Sanitary Sewer)

TABLE OF CONTENTS (cont.)

Plate No.	Title
	FIRE AND WATER UTILITY
C64	Typical Fire Hydrant Setting
C65	Detail - Post Indicator Valve
C66	Detail - Valve Box
C67	Thrust Block Details
	GAS UTILITY
C68	Typical Gas Service Connection
C69	Blow-off and Drip
	OIL/WATER SEPARATOR
C70	Oil/Water Separator
C71	Oil/Water Separator (with Sediment Chamber)
C72	Details - Inlet Tubes & Reaction Baffles
	STORM DRAINAGE COMPUTATIONS
C73	Nomograph For Time Of Concentration
C74	Runoff Computations
C75	Table - Size and Profile of Underground Storm Drains
C76	Table - Phasing of Discharge for Storm Drainage
C77	Analysis of Slope Erosion Due To Sheetflow

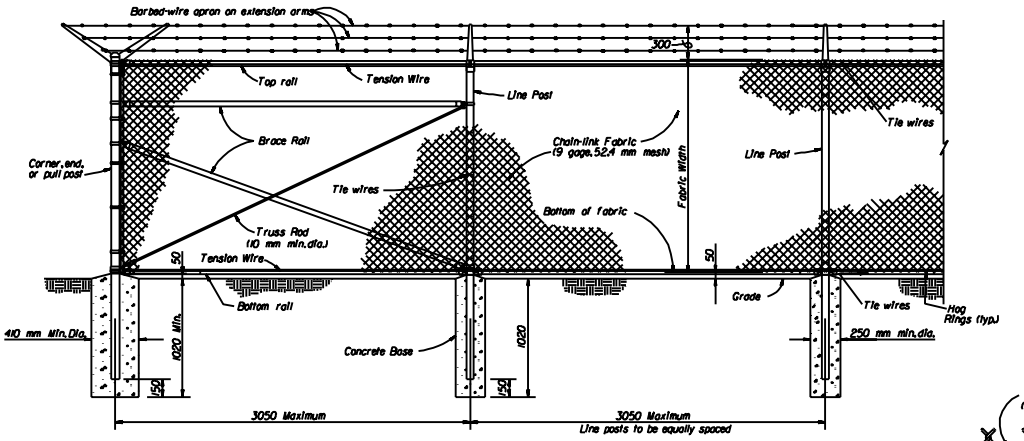

CHAIN-LINK SECURITY FENCE DETAIL
N.T.S.

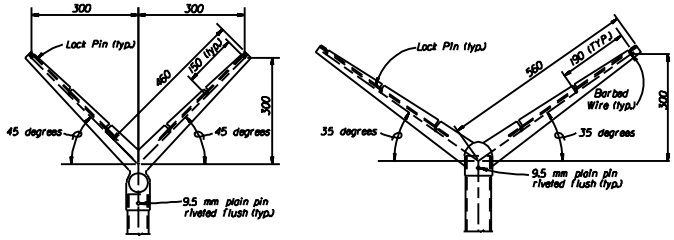

LINE POST CORNER POST

EXTENSION ARM DETAILS
N.T.S.

STEEL POST SCHEDULE			
USE AND SECTION	MINIMUM OUTSIDE DIMENSIONS (NOMINAL)		
	FABRIC LESS THAN 1800mm	FABRIC 1800mm TO 2400mm	FABRIC OVER 2400mm
Corner, End & Pull Posts			
Tubular - Round	60 mm O.D.	73 mm O.D.	100 mm O.D.
Tubular - Square	50 mm SQ.	64 mm SQ.	75 mm SQ.
C-Section (Roll-Formed)	90 mm x 90 mm	90 mm x 90 mm	———
Line Posts			
Tubular - Round	48 mm O.D.	60 mm O.D.	73 mm O.D.
H-Section	57 mm x 43 mm	57 mm x 43 mm	57 mm x 43 mm
C-Section (Roll-Formed)	48 mm x 41 mm	57 mm x 43 mm	———
Top, Bottom & Brace Rails			
Tubular - Round	42 mm O.D.		
Tubular - Square	38 mm O.D.		
H-Section	41 mm x 38 mm		
C-Section (Roll-Formed)	41 mm x 32 mm		

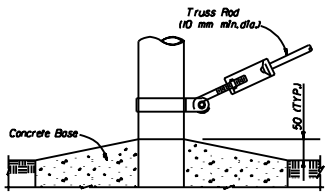

TRUSS ROD AND BAND

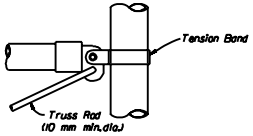

ROUND POST

H-BEAM

BRACE RAIL CLAMP DETAILS

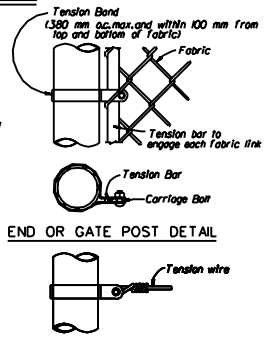

END OR GATE POST DETAIL

TENSION BAND DETAIL

FASTENING DETAILS
N.T.S.

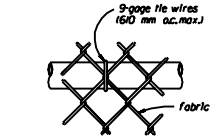

TOP OR BRACE RAIL ATTACHMENT

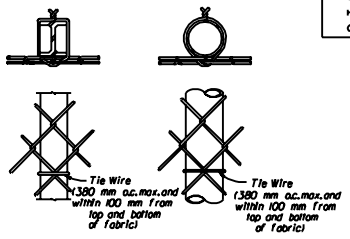

H-BEAM ROUND POST

LINE POST ATTACHMENTS
N.T.S.

NOTES:

1. Details shown are to clarify requirements and are not intended to limit other types of fence sections and methods of installation.
2. Wire ties, rails, posts, and braces shall be constructed on the secure side of the fence alignment. Chain-link fabric shall be placed on the opposite side of the secure area.
3. C-Section posts shall be installed so that the void inside the post is completely filled with concrete up to the top of the foundation.
4. Bottom rail shall be attached to double rail ends using 10 mm carriage bolts as shown.

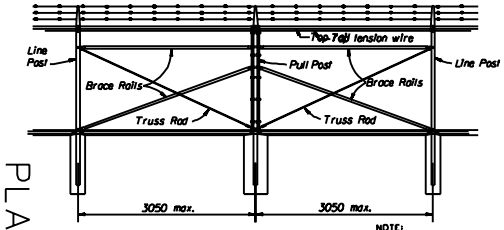

NOTE:
Provide brace panel whenever straight runs exceed 152.4 M.

BRACE PANEL DETAIL
N.T.S.

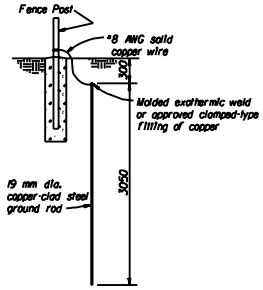

GROUNDING DETAIL
N.T.S.

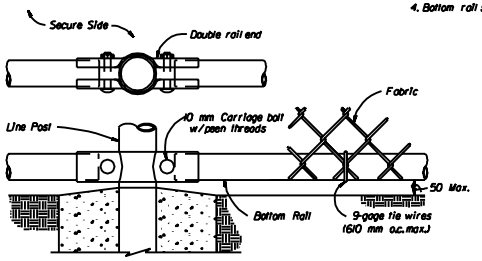

BOTTOM RAIL DETAILS
N.T.S.

CHAIN-LINK SECURITY FENCE DETAILS

PLATE C1

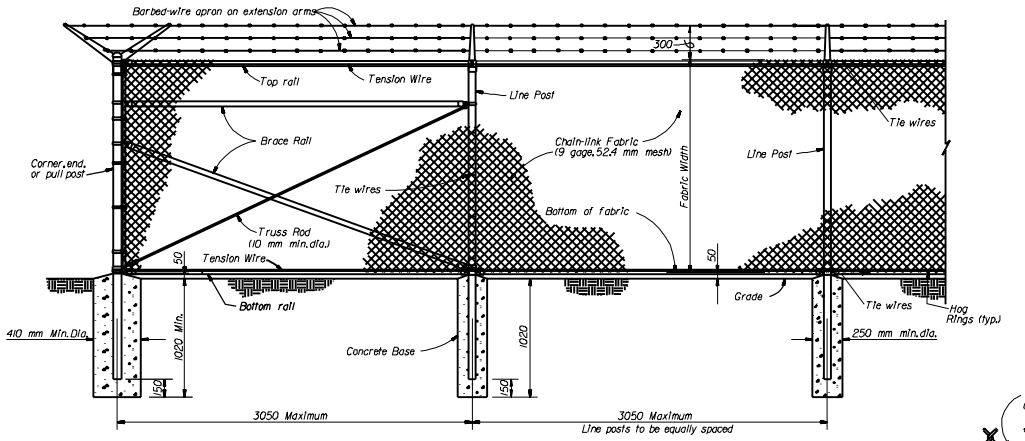

CHAIN-LINK SECURITY FENCE DETAIL

N.T.S.

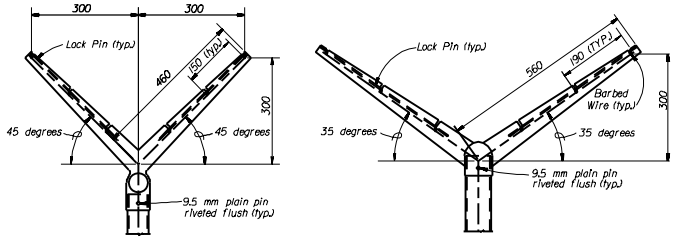

LINE POST

CORNER POST

EXTENSION ARM DETAILS

N.T.S.

STEEL POST SCHEDULE			
USE AND SECTION	MINIMUM OUTSIDE DIMENSIONS (NOMINAL)		
	FABRIC LESS THAN 1800mm	FABRIC 1800mm TO 2400mm	FABRIC OVER 2400mm
Corner, End & Pull Posts			
Tubular - Round	60 mm O.D.	73 mm O.D.	100 mm O.D.
Tubular - Square	50 mm SQ.	64 mm SQ.	75 mm SQ.
C-Section (Roll-Formed)	90 mm x 90 mm	90 mm x 90 mm	——
Line Posts			
Tubular - Round	48 mm O.D.	60 mm O.D.	73 mm O.D.
H-Section	57 mm x 43 mm	57 mm x 43 mm	57 mm x 43 mm
C-Section (Roll-Formed)	48 mm x 41 mm	57 mm x 43 mm	——
Top, Bottom & Brace Rails			
Tubular - Round	42 mm O.D.		
Tubular - Square	38 mm O.D.		
H-Section	41 mm x 38 mm		
C-Section (Roll-Formed)	41 mm x 32 mm		

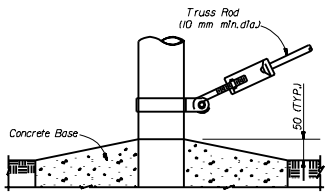

TRUSS ROD AND BAND

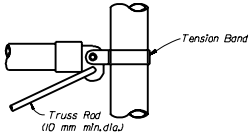

ROUND POST

H-BEAM

BRACE RAIL CLAMP DETAILS

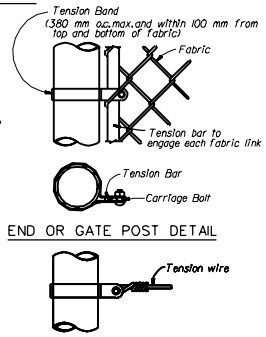

END OR GATE POST DETAIL

TENSION BAND DETAIL

FASTENING DETAILS

N.T.S.

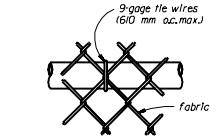

TOP OR BRACE RAIL ATTACHMENT

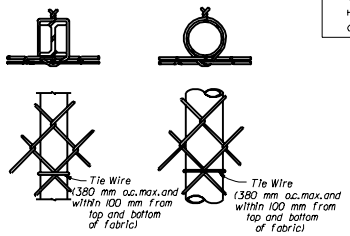

H-BEAM

ROUND POST

LINE POST ATTACHMENTS

N.T.S.

NOTES:

1. Details shown are to clarify requirements and are not intended to limit other types of fence sections and methods of installation.
2. Wire ties, rails, posts, and braces shall be constructed on the secure side of the fence alignment. Chain-link fabric shall be placed on the opposite side of the secure area.
3. C-Section posts shall be installed so that the void inside the post is completely filled with concrete up to the top of the foundation.
4. Bottom rail shall be attached to double rail ends using 10 mm carriage bolts as shown.

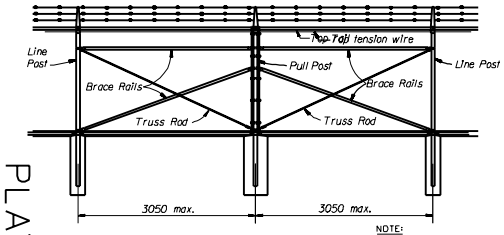

NOTE:
Provide brace panel whenever straight runs exceed 152.4 M.

BRACE PANEL DETAIL

N.T.S.

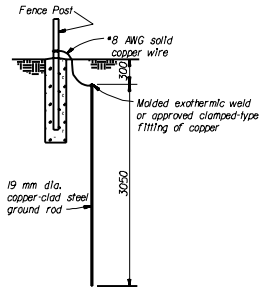

GROUNDING DETAIL

N.T.S.

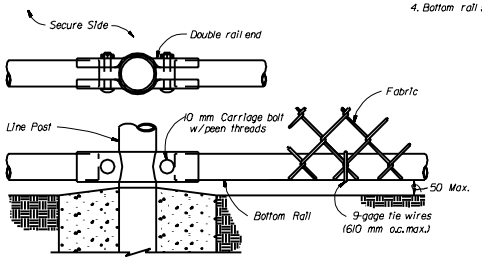

BOTTOM RAIL DETAILS

N.T.S.

CHAIN-LINK SECURITY FENCE DETAILS

PLATE C1

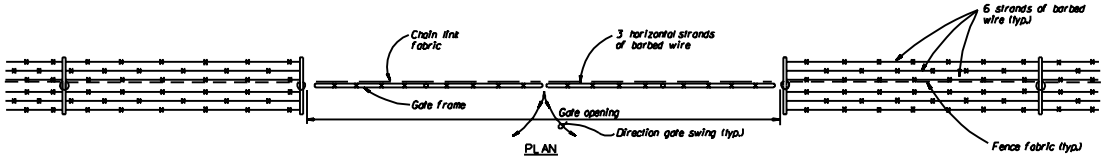

PLAN

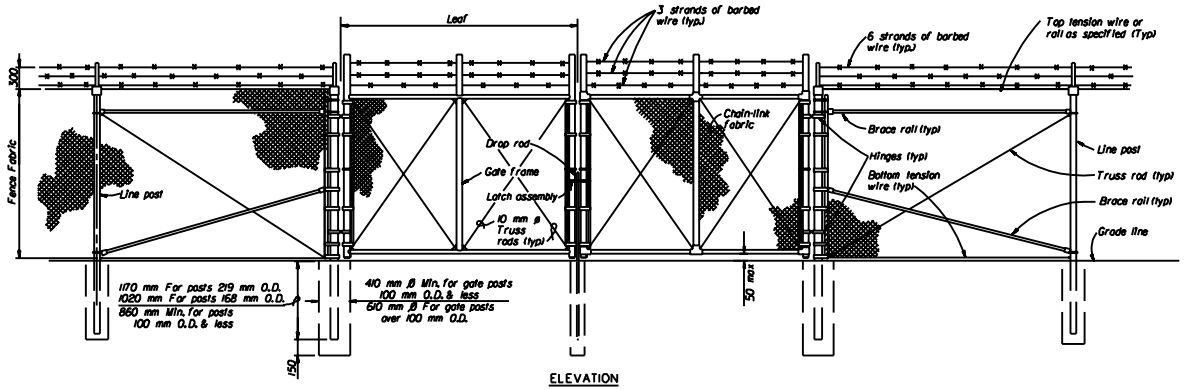

ELEVATION

DOUBLE SWING GATE (TYPE FE7 FENCE)

(FOR TYPE FE8 ADD REINFORCED BARBED TAPE)

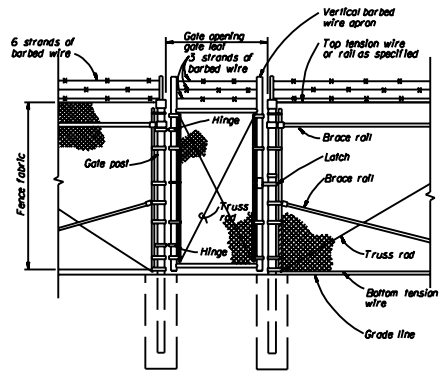

PERSONNEL GATE
TYPE FE7 FENCE

NOTES:

1. Details shown are to clarify requirements and are not intended to limit other type of fence sections and methods of installation.
2. Swing Gates shall be constructed with drop rods, padlocks, latch assembly and gate keepers except as noted.
3. All gate frames shall be a minimum 48 mm nominal (round) or 50 mm nominal (square). Gate frames shall be of welded construction or shall be assembled using heavy fittings. At Contractor's option a welded horizontal brace may be used in lieu of truss rods to brace all welded gate frames. The Contractor shall be responsible for the proper rigid construction of all gates supplied.
4. Gates shall be designated as follows:

Fence Type	:	FE5, FE6, etc.
Fence Height	:	millimeters
Type Opening	:	SO (single)
		DO (double)
Hinge	:	RA (standard)
		HO (offset)
Opening	:	mm (clear opening between gate posts)

EXAMPLES: FE6-84-DO-RA-24
FE5-48-SO-HO-6

GATE POST SCHEDULE	
GATE LEAF WIDTH (NOMINAL)	OUTSIDE DIMENSION (NOMINAL)
1830 mm or less	73 mm OD 64 mm SQ
More than 1830 mm to 3960 mm	100 mm OD
More than 3960 mm to 5490 mm	168 mm OD
More than 5490 mm	219 mm OD

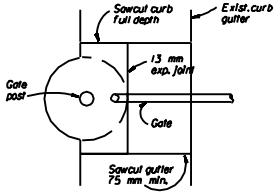

PLAN

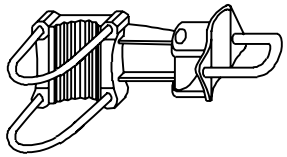

OFFSET HINGE

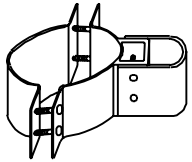

STANDARD HINGE

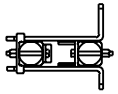

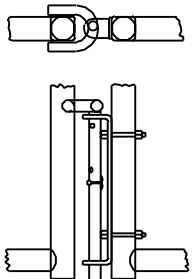

LATCH ASSEMBLY

DROP ROD ASSEMBLY

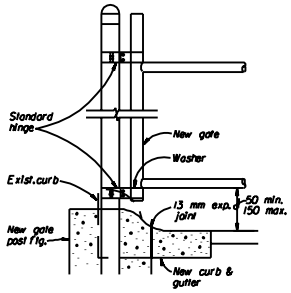

SECTION
GATE POST DETAIL
AT CURB AND GUTTER
N.T.S.

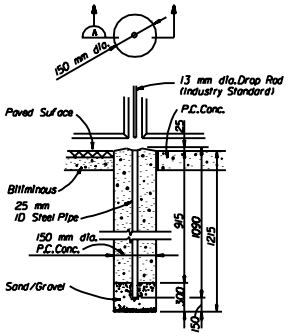

DROP ROD FOUNDATION

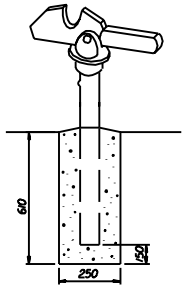

GATE KEEPER
(TO HOLD GATE OPEN)

SWING GATE DETAILS
N.T.S.

CHAIN - LINK FENCE GATE DETAILS

PLATE C2

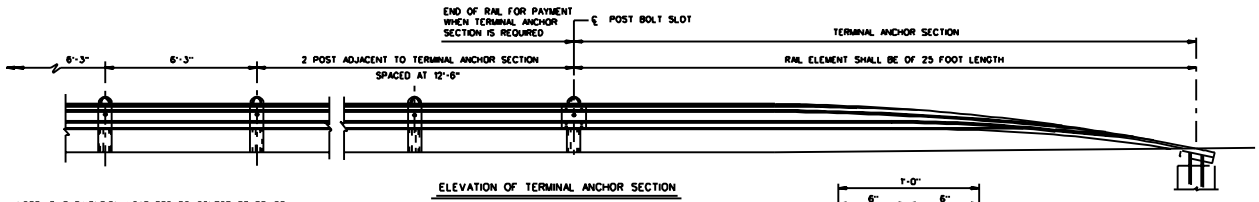

*NOTE: THIS DIMENSION MEASURED TO CENTER OF SPLICE WHEN TERMINAL CONNECTOR IS USED.

ELEVATION OF TERMINAL ANCHOR SECTION

TERMINAL ANCHOR SECTION SHALL CONSIST OF A TERMINAL ANCHOR POST AND ONE 25 FOOT RAIL ELEMENT AND WILL BE REQUIRED ONLY AT LOCATIONS SPECIFIED ELSWHERE ON THE PLANS.

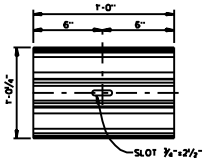

BACK-UP PLATE

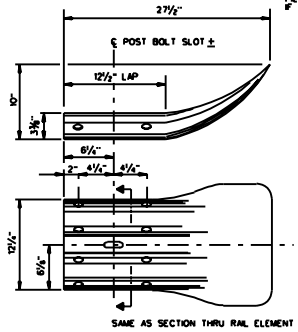

TERMINAL SECTION

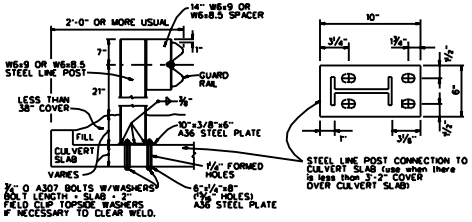

LOW FILL CULVERT

POST MOUNTING

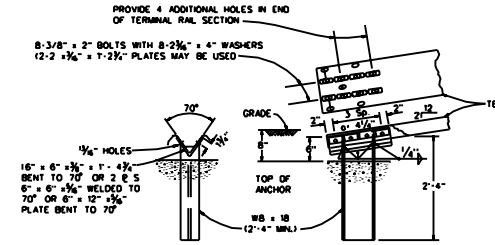

TERMINAL ANCHOR POST

NOTE: THIS POST REQUIRES 4 ADDITIONAL HOLES (SHOP OR FIELD) IN THE TERMINAL RAIL MEMBER WITH 8-5/8" BOLTS AND WASHER PLATES AS SHOWN FOR ATTACHMENT.

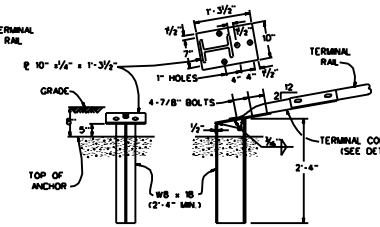

OPTIONAL TERMINAL ANCHOR POST

NOTE: THIS OPTIONAL POST REQUIRES THE USE OF THE 1 GA. TERMINAL CONNECTOR WITH 4-7/8" BOLTS FOR ATTACHMENT TO THE ANCHOR POST.

GENERAL NOTES

1. THE EXACT POSITION OF GUARD FENCE SHALL BE AS SHOWN ELSEWHERE ON THE PLANS AS DIRECTED BY THE ENGINEER. GUARD FENCE SHALL BE TRANSITIONED TO A SMOOTH CONNECTION WITH OTHER GUARD FENCE OR STRUCTURE RAILING AS SHOWN ELSEWHERE ON PLANS.
2. AT THE OPTION OF THE CONTRACTOR THE RAIL ELEMENTS FOR GUARD FENCE MAY BE FURNISHED IN EITHER 12½OR 25 FOOT NOMINAL LENGTHS WITH POSTS BOLT SLOTS FOR CONNECTION TO POSTS.
3. BOLTS SHALL BE OF SUFFICIENT LENGTH TO EXTEND THROUGH THE FULL THICKNESS OF THE NUT AND NO MORE THAN ¼" BEYOND IT.
4. THE TOP OF THE TERMINAL ANCHOR POSTS AND ALL STEEL FITTINGS THEREON SHALL BE GALVANIZED A MINIMUM OF 10" AS SHOWN.
5. WHERE SOLID ROCK IS ENCOUNTERED OR WHERE SHOWN ON THE PLANS, THE DIAMETER OF THE HOLES SHALL BE APPROXIMATELY 12 INCHES, THE BACKFILL SHALL BE WITH A CONSCIENTIOUS MATERIAL, AND EMBEDMENT DEPTH SHALL BE 1'-6" OR MORE AS DIRECTED BY THE ENGINEER. TIMBER POSTS SHALL NOT BE SET IN CONCRETE.
6. THE TERMINAL ANCHOR POST SHALL BE SET IN CLASS "A", "B" OR "C" CONCRETE IN ACCORDANCE WITH ITEM "CONCRETE FOR STRUCTURES", OR SET IN CONCRETE IN ACCORDANCE WITH ITEM "CONCRETE PAVEMENT". CONCRETE SHALL BE SUBSIDIARY TO THE BID ITEM REQUIRING CONSTRUCTION OF THE TERMINAL RAIL SECTION AND ANCHORAGE SYSTEM.
7. TIMBER POSTS MAY BE BEVELED AT APPROXIMATELY 10 DEGREES ON THE TOP OR BOTH ENDS WITH HIGH SIDE TOP OF POST PLACED TOWARD THE ROADWAY OR THEY MAY BE DOWED WHEN "BLOCKED OUT". THE UPPER PORTION OF THE POST SHALL BE NOTCHED ½" TO PROVIDE FLAT SURFACE FOR TIMBER SPACER. A TOLERANCE OF - ⅛" WILL BE PERMITTED ON THE NOTCHED PORTION OF THE POST.
8. AN ANCHOR OTHER THAN A TERMINAL ANCHOR POST SHALL CONSIST OF A CONNECTION SIMILAR TO THE RAIL SPLICE OR SIMILAR TO THE TERMINAL CONNECTOR.
9. SPECIAL FABRICATION WILL BE REQUIRED IN INSTALLATIONS HAVING A CURVATURE OF LESS THAN 150 RADIUS.
10. POST SPACING WILL BE 6'-3" EXCEPT THAT THE FIRST POST WILL BE 25' FROM THE TERMINAL ANCHOR POST AND THE NEXT TWO POSTS SPACED AT 12'-6" WITH A MINIMUM OF 8 POSTS ADJACENT TO STRUCTURES SPACED AT 3'-1½".
11. THE 10 GAGE TERMINAL CONNECTORS MUST BE USED WITH THE OPTIONAL TERMINAL ANCHOR POST. EITHER ANCHOR POST MAY BE USED WITH EITHER CONCRETE ANCHOR.
12. CROWN WILL BE WIDENED TO ACCOMODATE GUARD FENCE.
13. STEEL POSTS SHALL BE BLOCKED OUT. A W6x8.5 OR W6x9.0 STEEL SPACER SHALL BE USED WITH STEEL POSTS. BACK-UP PLATES SHALL BE PROVIDED AT INTERMEDIATE (NON-SPLICE) STEEL POSTS.
14. WHEN BLOCKOUT GUARD FENCE IS SPECIFIED ELSEWHERE IN THE PLANS, A 6x8x14" TREATED TIMBER SPACER OF YELLOW PINE SHALL BE USED WITH WOOD POSTS.
15. UNLESS OTHERWISE SHOWN IN THE PLANS, GUARD FENCE PLACED IN THE VICINITY OF CURBS SHALL BE BLOCKED OUT SO THAT THE FACE OF CURB IS LOCATED DIRECTLY BELOW OR BEHIND THE FACE OF RAIL. RAIL PLACED OVER CURBS SHALL BE INSTALLED SO THAT THE POST BOLT IS LOCATED APPROXIMATELY 21-INCHES ABOVE THE GUTTER PAN OR ROADWAY SURFACE.
16. WELDED STEEL POST AND SPACERS SHALL MEET THE REQUIREMENTS OF ASTM A-569. THE FLANGE WIDTH AND THICKNESS, WEB THICKNESS, AND DEPTH OF WELDED POSTS AND SPACERS SHALL EQUAL OR EXCEED THE DIMENSIONS OF A STANDARD ROLLED W6x8.5.
17. STEEL POSTS AND SPACERS SHALL MEET THE REQUIREMENTS OF ASTM A-36. BOLT HOLES SHALL BE APPROXIMATELY CENTERED BETWEEN WEB AND EDGE OF FLANGE OF SPACERS AND POSTS.
18. UNLESS OTHERWISE SHOWN IN THE PLANS, MBGF SHALL BE PLACED WITH THE FACE OF RAIL DIRECTLY ABOVE THE SHOULDER EDGE (OR CURB FACE) EXCEPT THE 25' TERMINAL ANCHOR SECTION AND ADJACENT 25' OF MBGF SHALL BE FLARED AT 25:1 (LONGITUDINAL LATERAL) TO PROVIDE A 2' OFFSET BETWEEN BURIED ANCHOR AND SHOULDER EDGE (OR CURB FACE). FLARING THE 25' TERMINAL ANCHOR AND ADJACENT 25' MBGF IS OPTIONAL FOR ONE-WAY TRAFFIC CONDITIONS ON THE DOWNSTREAM END OF GUARD FENCE.
19. WASHERS USED WITH THE EIGHT ⅝" SPLICE BOLTS AND NUTS THAT ARE PROVIDED FOR TERMINAL CONNECTIONS AND OR TERMINAL ANCHOR POSTS SHALL BE 1½"x3"x⅜", OR 1" I.D. AND 2" O.D.x0.134" (ANSI B27.2) NARROW TYPE A PLAIN WASHERS.
20. BACK-UP PLATES SHALL CONFORM TO THE MATERIALS AND GALVANIZING REQUIREMENTS SPECIFIED FOR THE RAIL ELEMENT, AND SHALL BE THE SAME NOMINAL THICKNESS AS THE RAIL ELEMENT USED.

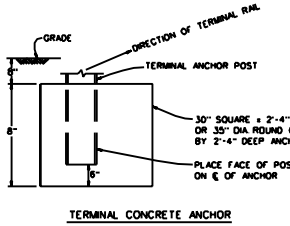

TERMINAL CONCRETE ANCHOR

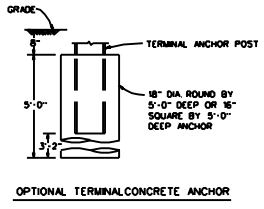

OPTIONAL TERMINAL CONCRETE ANCHOR

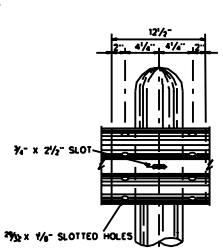

RAIL SPLICE

NOT TO SCALE

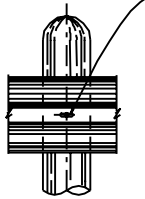

INTERMEDIATE POST CONNECTION

NOT TO SCALE

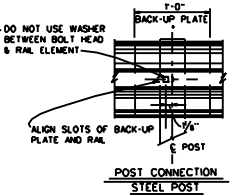

POST CONNECTION

STEEL POST

NOT TO SCALE

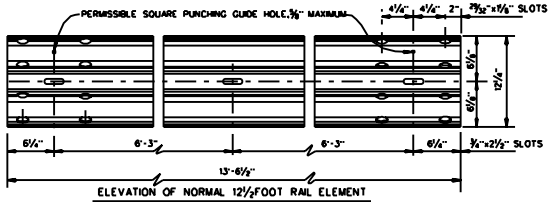

ELEVATION OF NORMAL 12½FOOT RAIL ELEMENT

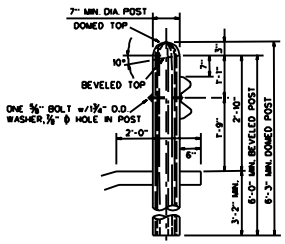

WOOD LINE POST DETAIL

NOT TO SCALE

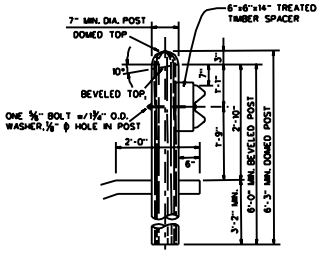

WOOD LINE POST DETAIL

(BLOCKOUT)

NOT TO SCALE

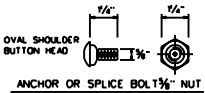

ANCHOR OR SPLICE BOLT ⅝" NUT

POST BOLT: SIMILAR EXCEPT LENGTH

(⅞" HEX BOLTS REQUIRED FOR TERMINAL CONNECTOR)

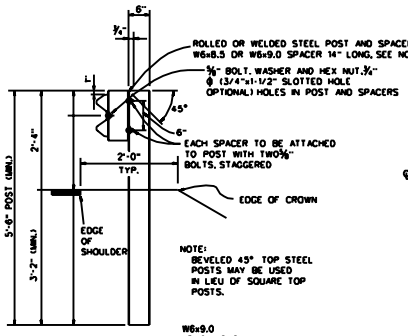

STEEL LINE POST

(BLOCKOUT)

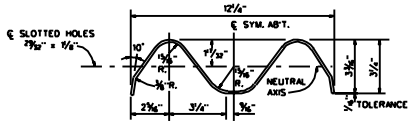

NOTE: ACTUAL SECTION MAY BE USED SLIGHTLY DIFFERENT DEPENDING UPON THE MANUFACTURER.

SECTION THRU GUARD RAIL

METAL BEAM GUARD FENCE DETAILS

PLATE C3

PLANT LEGEND										
KEY	COMMON NAME	SCIENTIFIC NAME	REMARKS	MIN. HEIGHT	CALIPER OR SPREAD	B & B OR B/B C	MIN. ROOT SPREAD OR BALL DIMENSIONS		MIN. PIT SIZE	
							DEPTH	DIA.	DEPTH	DIA.

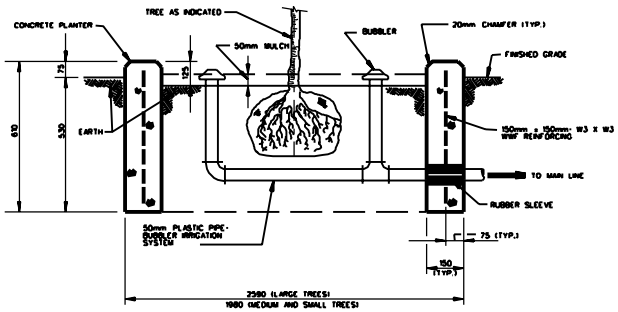

TREE WELL DETAIL (TYPICAL) WITH BUBBLERS (2 EACH)

NOT TO SCALE

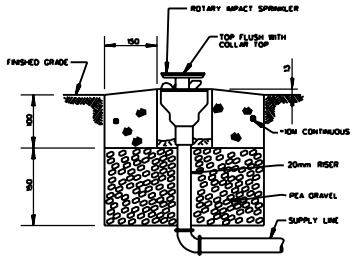

NOTE:
CONCRETE COLLARS FOR ROTARY SPRINKLERS LOCATED IN LAWN AREAS.

IRRIGATION SPRINKLER COLLAR SECTION

NOT TO SCALE

NOTES:

1. B & B DENOTES BALLED AND BURLAPPED.
2. C DENOTES CONTAINER - 15 LITER UNLESS OTHERWISE NOTED.
3. PB DENOTES PLANT BED.
4. TREES WILL NOT BE PLANTED UNDER OVERHEAD ELECT. LINES OR IN DITCHES.
5. CONTRACTOR WILL EXAMINE UTILITY PLANS AND AVOID UTILITIES.
6. NUMBER OF PLANTS & SPACINGS WILL DEPEND ON SIZE OF PLANTING AREA.
7. ONLY TOPSOIL FREE FROM NOXIOUS PLANTS EXCAVATED FROM PITS AND BEDS WILL BE ACCEPTABLE FOR USE AS BACKFILL MATERIAL. (SEE SPECIFICATIONS).
8. SMALL TREES DO NOT REQUIRE STAKING.
9. ALL DIMENSIONS ARE IN MILLIMETERS UNLESS OTHERWISE SHOWN.

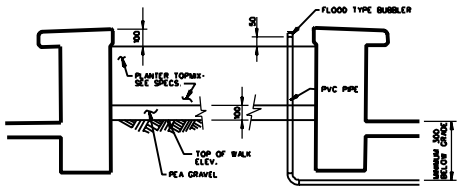

RAISED PLANTER DETAIL

NOT TO SCALE

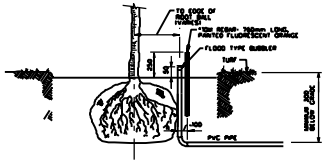

BUBBLER IRRIGATION DETAIL

NOT TO SCALE

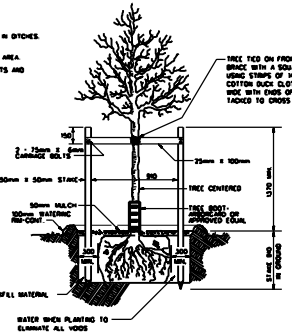

SECTION: PLANTING AND STAKING TREES

NOT TO SCALE

LANDSCAPE LEGEND

	NEW	EXISTING
TREE		
GROUP OF SHRUBS OR VINES		

KEY TO PLANT DESIGNATIONS

3 BAM 1220mm O.C.

SPACING OF PLANTS, CENTER TO CENTER
VARIETY OF PLANT (SEE PLANT LEGEND)
NO. OF PLANTS REQUIRED

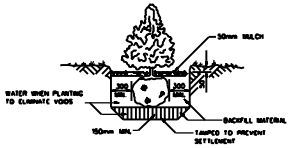

BALLED & BURLAPPED SHRUBS

NOT TO SCALE

(ALSO APPLIES TO SHRUB CONTAINERS)

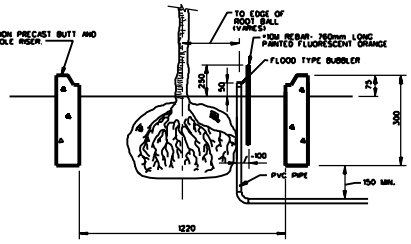

NOTE:
THIS DETAIL CAN BE USED WITH OR WITHOUT PERIMETER GRADE

TREE RING WITH BUBBLER IRRIGATION DETAILS

NOT TO SCALE

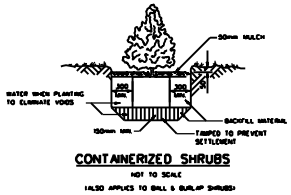

CONTAINERIZED SHRUBS

NOT TO SCALE

(ALSO APPLIES TO BALL & BURLAP SHRUBS)

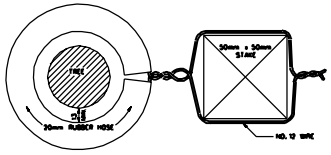

PLAN

DETAIL SHOWING TYING OF TREE TO SINGLE STAKE

NOT TO SCALE

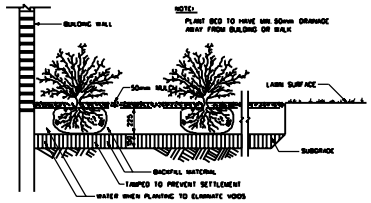

NOTE:
PLANT BED TO HAVE MIN. 50mm DRAINAGE AWAY FROM BUILDING OR WALK

TYPICAL PLANTING BED FOR GROUND COVERS

NOT TO SCALE

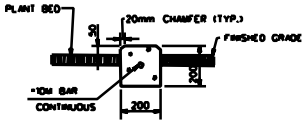

200mm CONCRETE MOWSTRIP (C.M.S.)

NOT TO SCALE

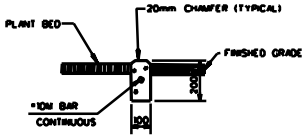

CONCRETE MOWSTRIP

NOT TO SCALE

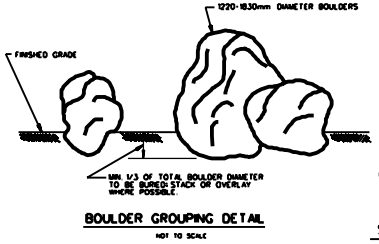

BOULDER GROUPING DETAIL

NOT TO SCALE

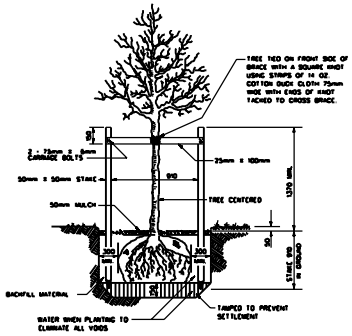

SECTION STAKING BALLED & BURLAPPED TREES

NOT TO SCALE

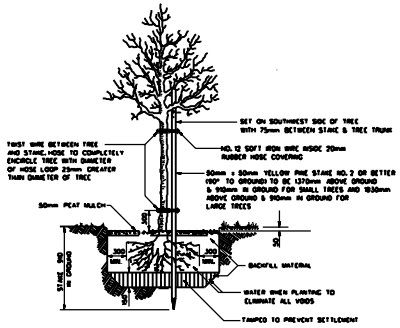

SECTION STAKING BAREROOT TREES

NOT TO SCALE

LANDSCAPE DETAILS

PLATE C4

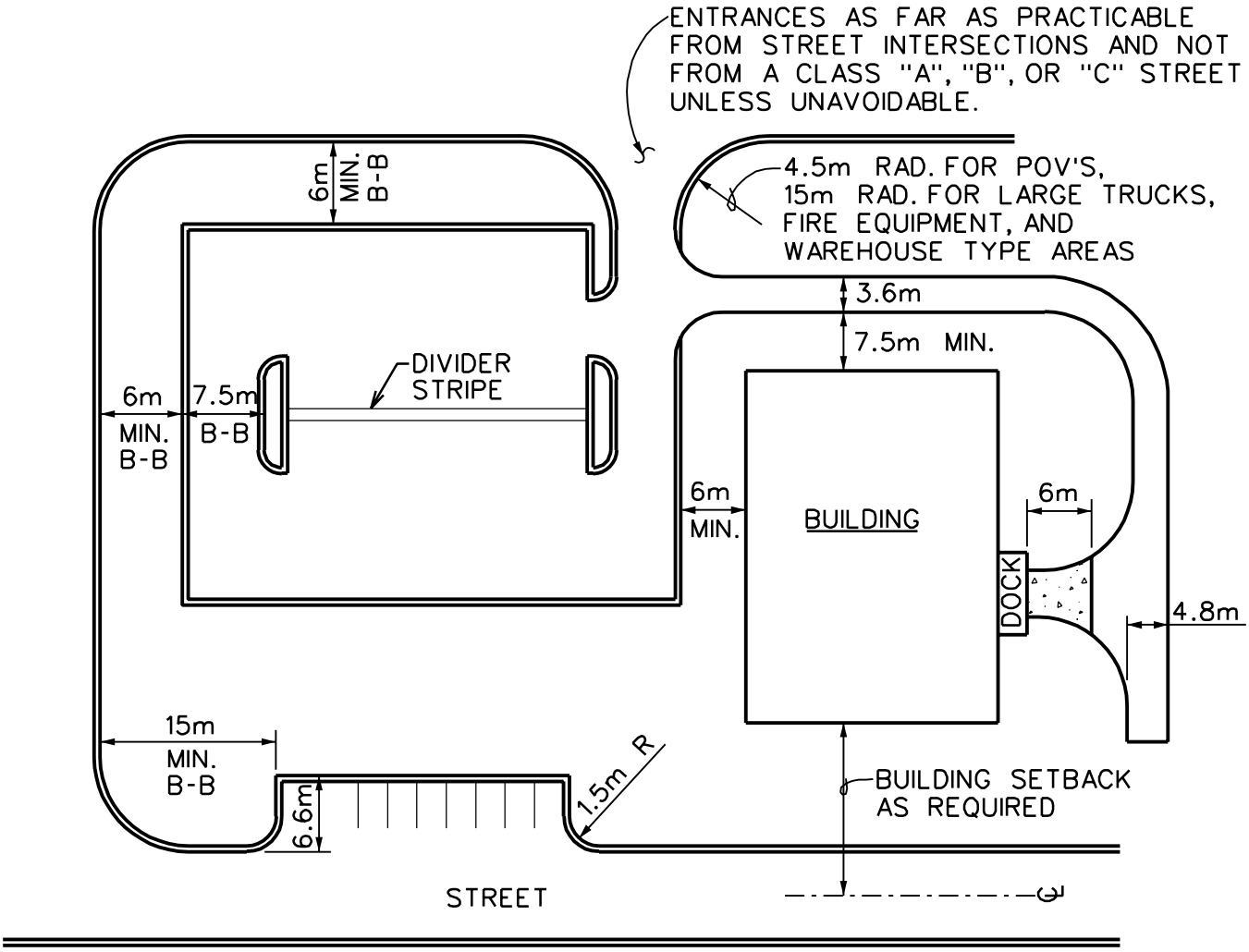

PARKING AREA AND DRIVE DISTANCES FROM STREETS, INTERSECTIONS, AND BUILDINGS

N.T.S.

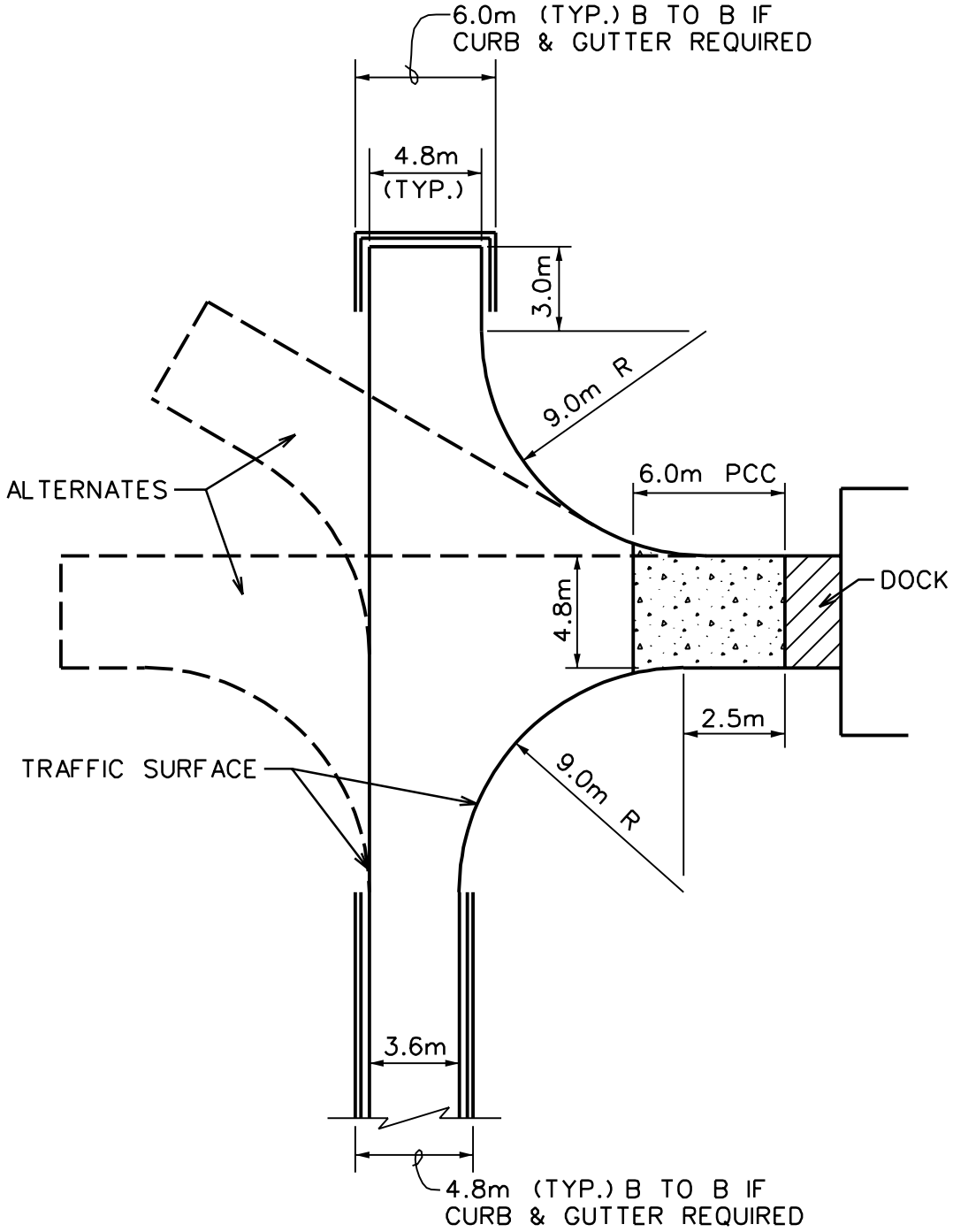

NOTE TO DESIGNER:

THIS DETAIL SHOULD BE USED FOR MEDIUM-SIZED TRUCKS (SU), MODIFY FOR LARGE TRUCKS AND SEMI-TRAILERS.

TYPICAL SERVICE DRIVE TURN-AROUND

N.T.S

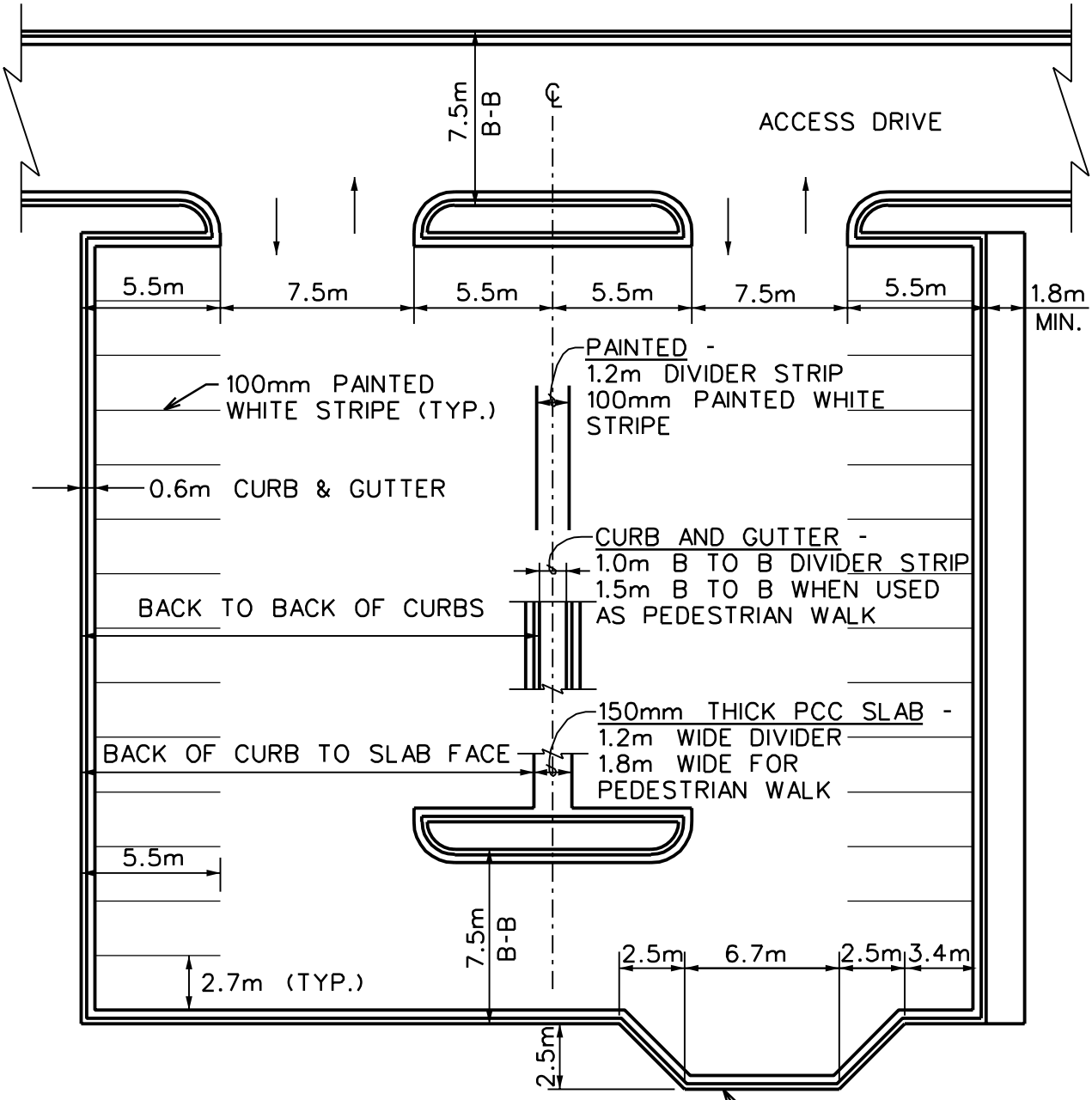

NOTE TO DESIGNER:

SEE DESIGN NOTES, PLATE C-8 FOR GENERAL NOTES AND CRITERIA PERTAINING TO END ISLANDS AND DIVIDERS.

P.O.V. PARKING AREA

LAYOUT STANDARDS

N.T.S

P.O.V. PARKING AREAS

NOTES TO DESIGNER:

1. PARKING AT ARMY INSTALLATIONS SHALL BE 90° UNLESS DIRECTED OTHERWISE. PARKING AT AIR FORCE FACILITIES WILL BE 90°, EXCEPT THAT 60° PARKING MAY BE USED WHEN A HIGH IN-OUT RATE IS ANTICIPATED AND ONE WAY MOVEMENT CAN BE DESIGNED INTO THE OVERALL LAYOUT.

2. WHEN LANDSCAPING IS TO BE INCLUDED IN LOT, USE END ISLANDS AS DETAILED ON PLATE C9.

3. WHEN LANDSCAPING IS NOT TO BE PROVIDED, USE END ISLANDS AS DETAILED ON PLATE C10.

4. PAINTED DIVIDER STRIPS SHALL BE USED EXCEPT WHEN STORM DRAINAGE, TRAFFIC CONTROL, OR LANSCAPING CONSIDERATIONS INDICATE A NECESSITY FOR RAISED DIVIDERS.

5. STRIPING BETWEEN HANDICAP PARKING SPACES SHALL CONSIST OF 2 - 100mm PAINTED STRIPES 1.5m ON CENTER WITH 100mm WIDE DIAGONAL STRIPES 1.0m ON CENTERS.

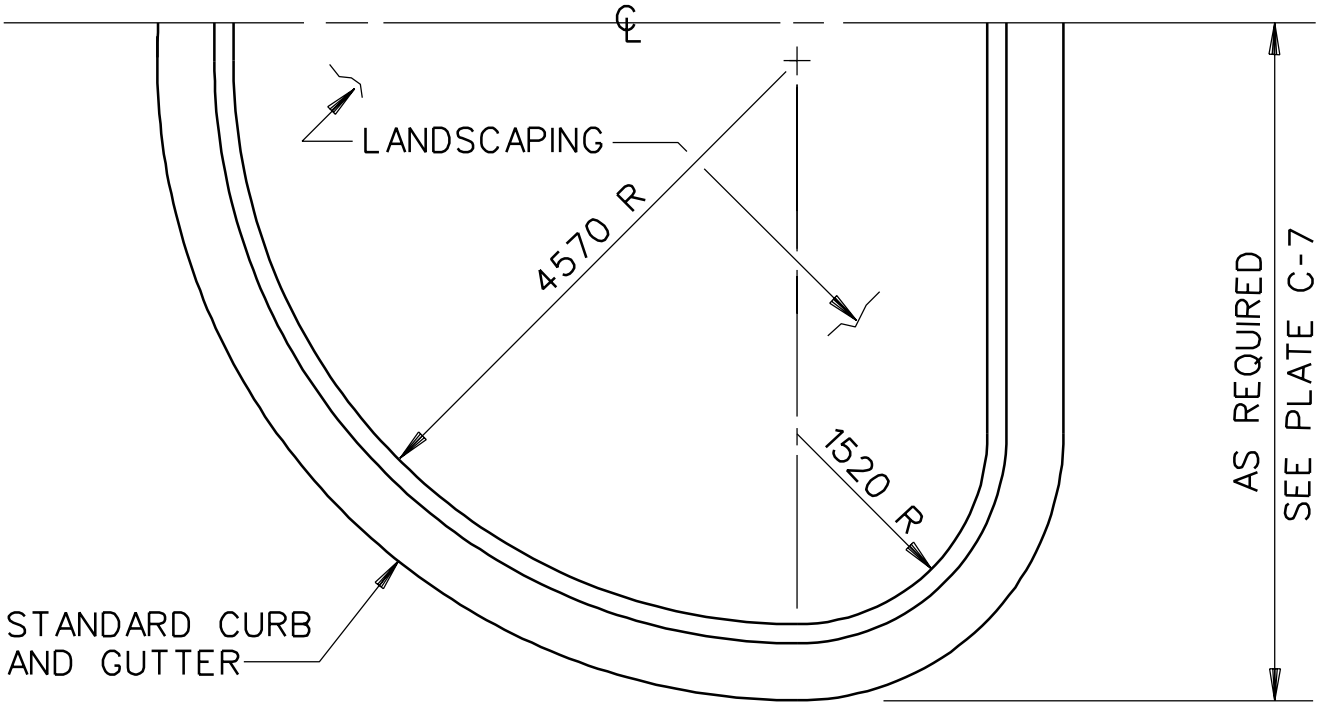

PLAN

END ISLAND DETAIL 1

(WITH LANDSCAPING)
N.T.S.

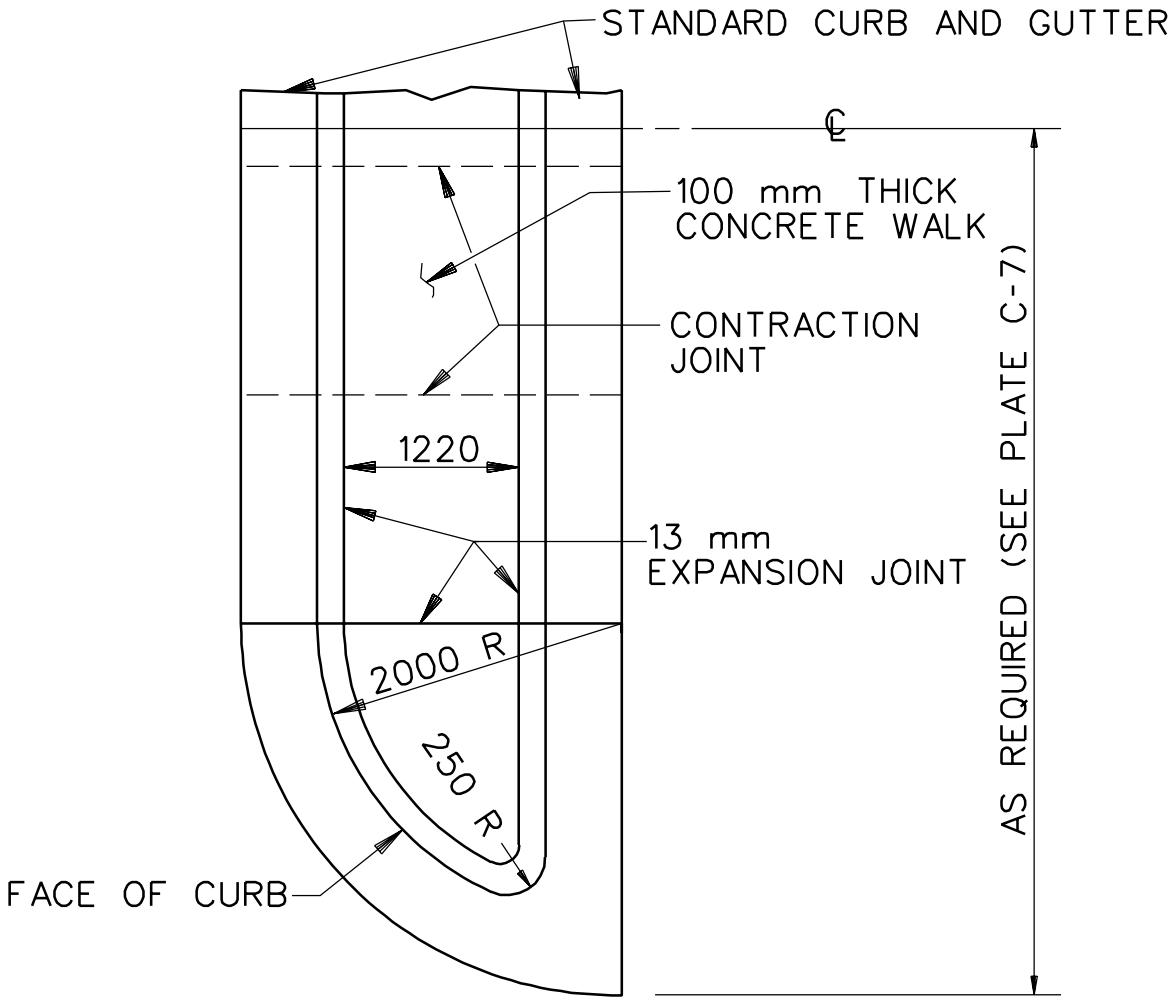

PLAN

END ISLAND DETAIL II

(WITHOUT LANDSCAPING)

N.T.S.

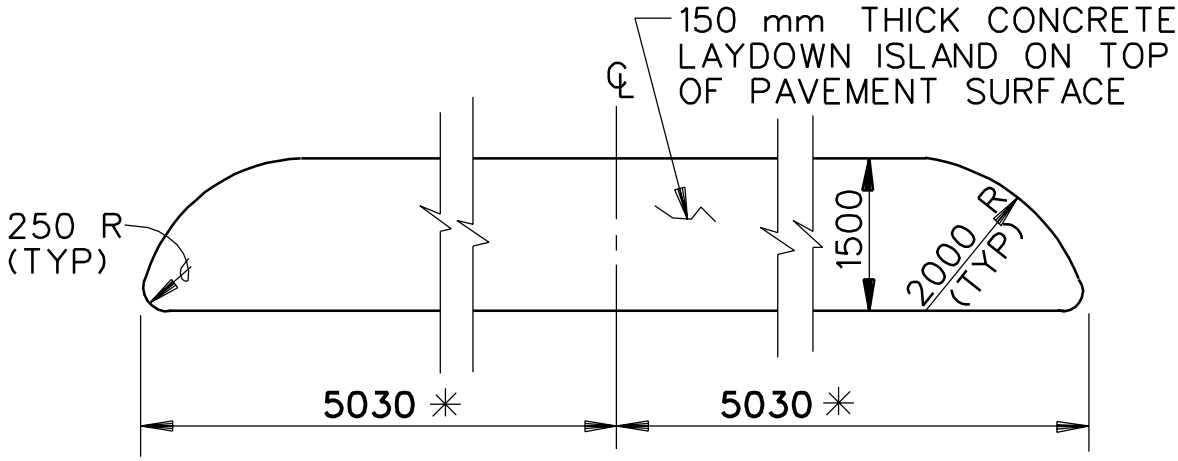

PLAN

✳ DIMENSION SHOWN APPLIES TO ARMY PROJECTS.
FOR AIR FORCE PROJECTS, INCREASE 300 mm, TO 5330 mm.

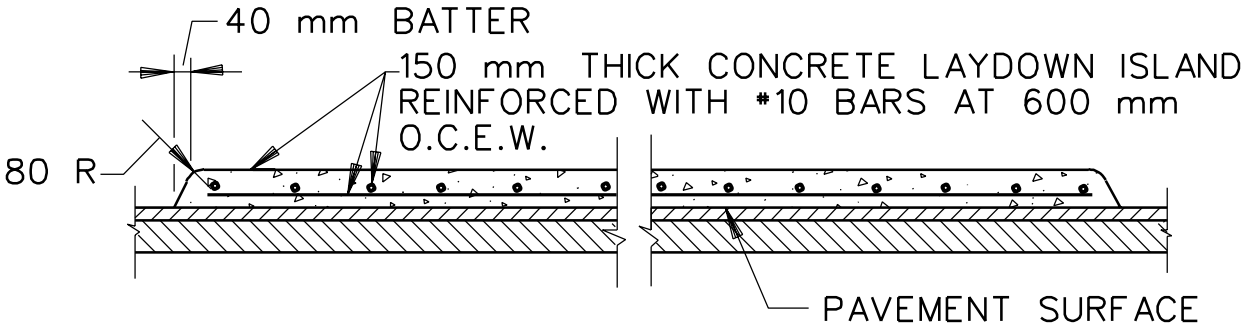

SECTION

NOTE: ANCHOR TO PAVEMENT WITH 4-#16 BARS 460 mm LONG, EQUALLY SPACED. MIN. COVER OVER ANCHOR BARS 50 mm.

END ISLAND DETAIL III

N.T.S.

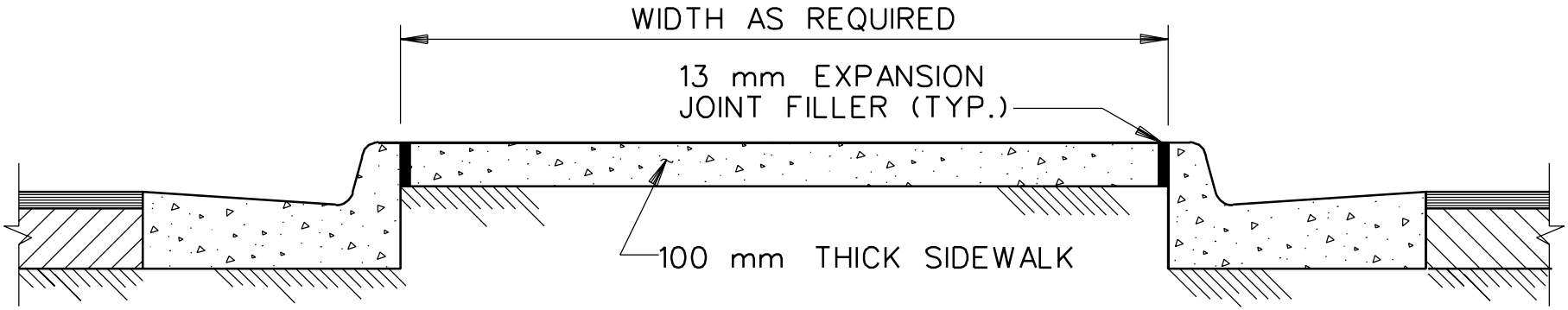

CURB AND GUTTER

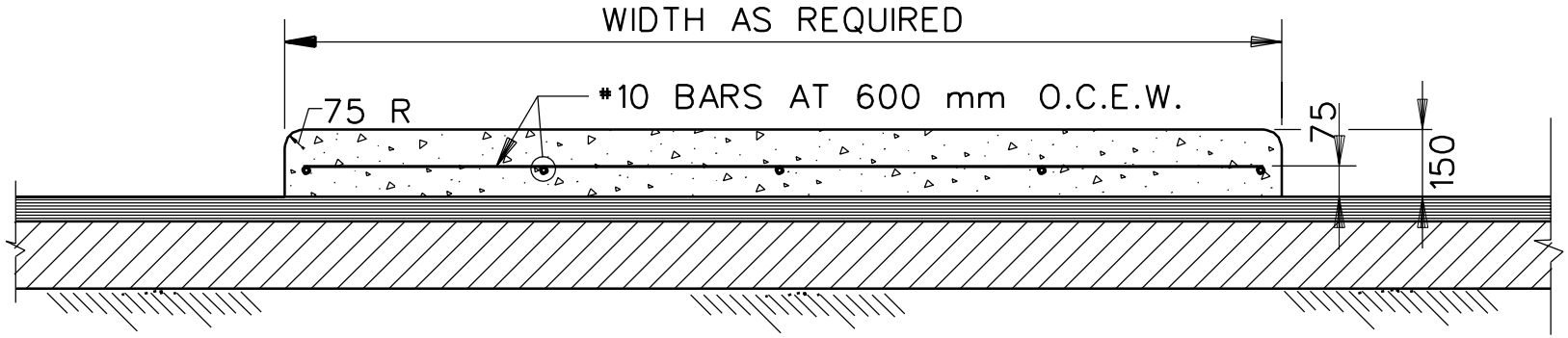

OVERLAY TYPE

NOTE: ANCHOR TO PAVEMENT WITH #16 BARS 460 mm LONG, AT MAXIMUM SPACING OF 3000 mm O.C. MIN. COVER OVER ANCHOR BARS 50 mm.

TYPICAL SECTION OF DIVIDER STRIPS

N.T.S.

PLATE C12

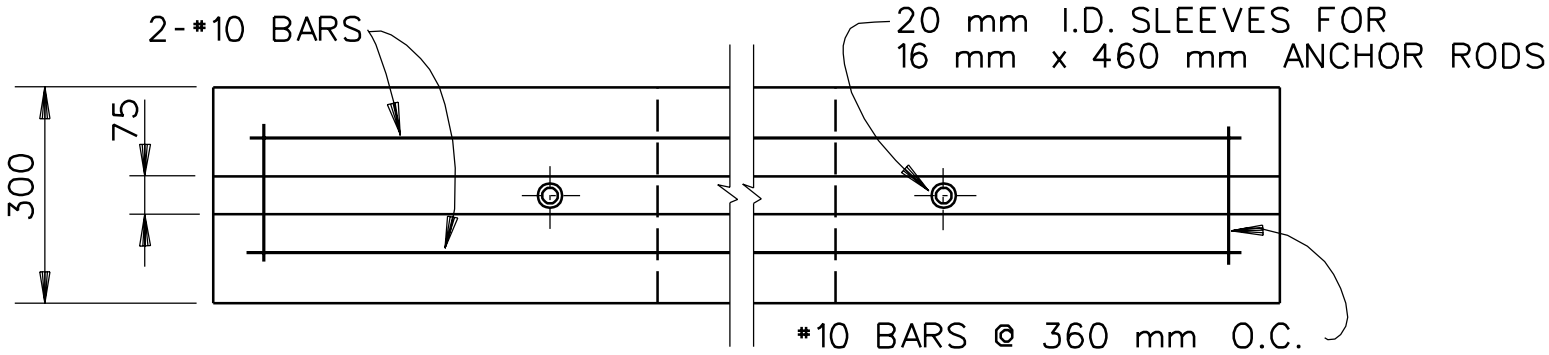

PLAN

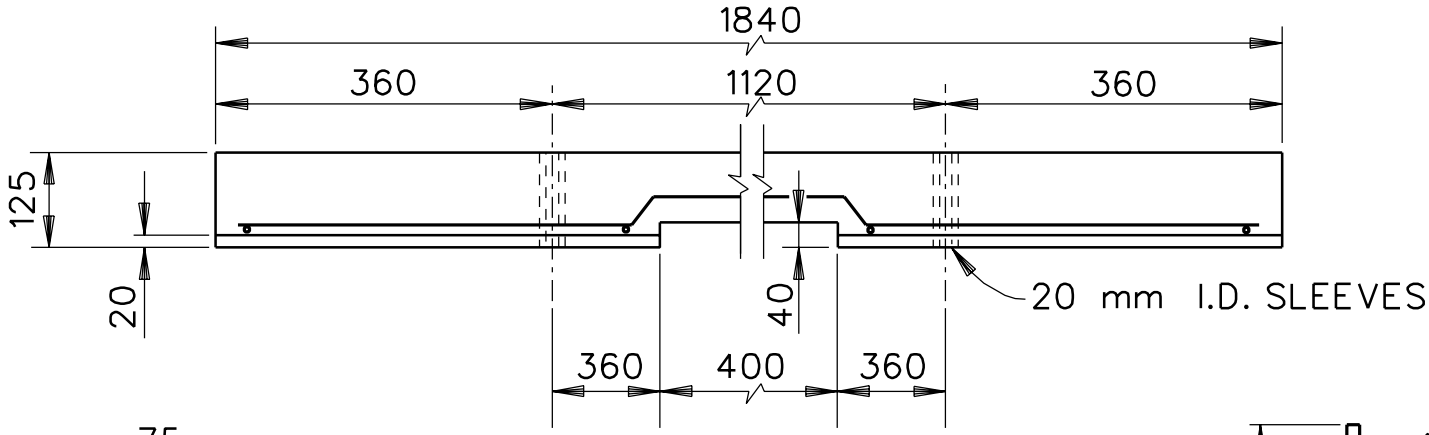

ELEVATION

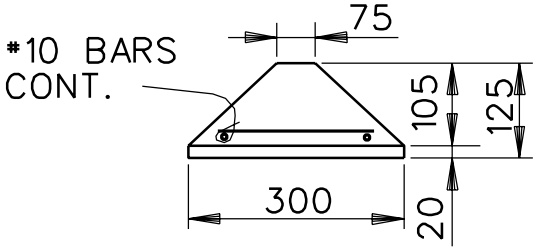

END VIEW

NOTE:

APPROVED STANDARD MANUFACTURED WHEEL STOP MAY BE USED

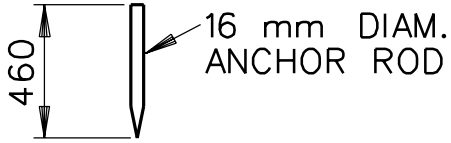

ANCHOR ROD

WHEEL STOP DETAILS

N.T.S.

PLATE C13

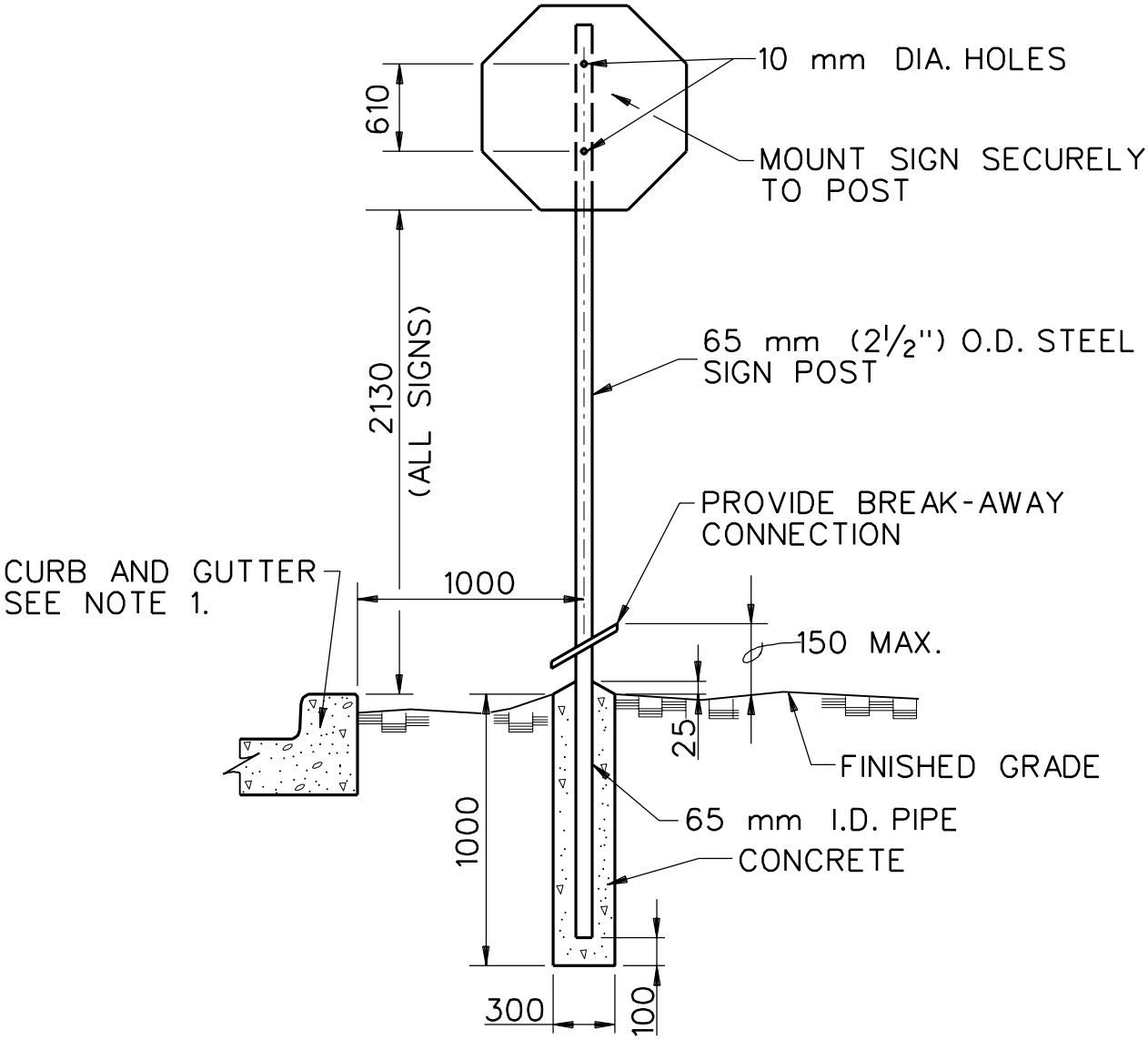

TRAFFIC SIGN MOUNTING DETAILS

N.T.S

NOTES TO DESIGNER:

1. WHEN CURB AND GUTTER IS NOT PRESENT, ℄ OF POST SHALL BE SET 2100 mm FROM EDGE OF PAVEMENT.
2. REGULATORY SIGNS AT PARKING AREAS (HANDICAPPED PARKING, ETC.) SHALL BE LOCATED 300 mm BEYOND THE SIDEWALK ABUTTING THE CURB.
3. ALL SIGNS SHALL CONFORM TO THE MANUAL ON UNIFORM TRAFFIC CONTROL DEVICES (DEPT. OF TRANSPORTATION).

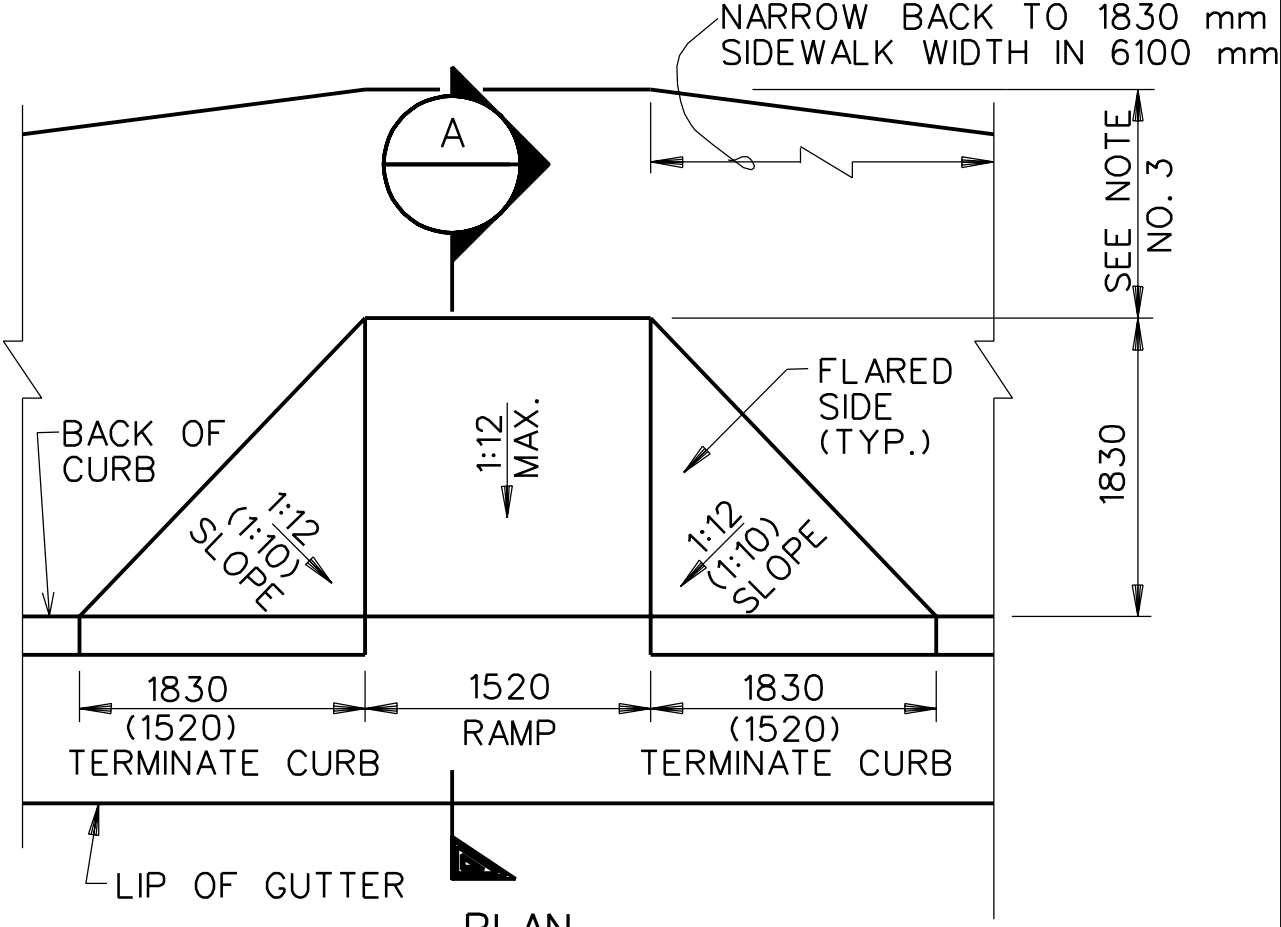

PLAN

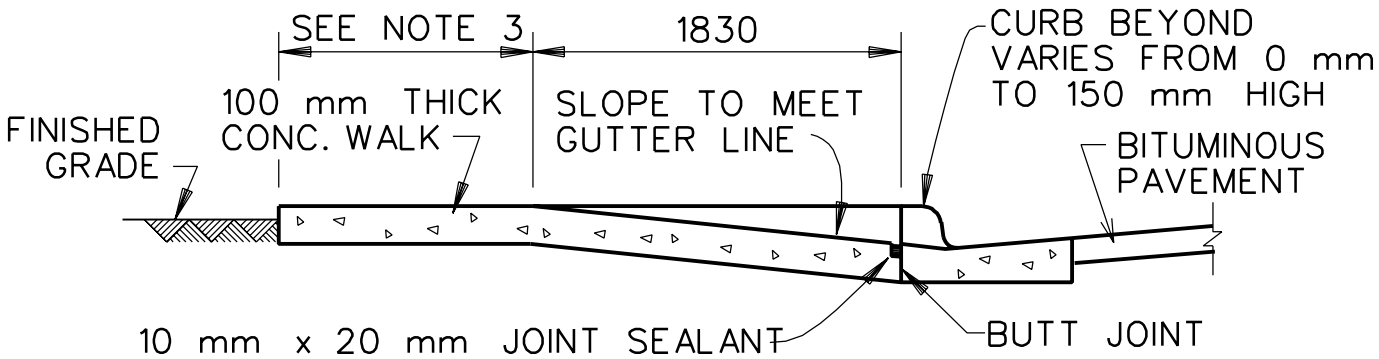

SECTION A

HANDICAPPED CURB - RAMP DETAIL

N.T.S.

NOTES TO DESIGNER:

1. CONTRACTION JOINTS ARE NOT SHOWN FOR CLARITY.
2. SEE UNIFORM FEDERAL ACCESSIBILITY STANDARDS AND ADA GUIDELINES FOR COMPLETE HANDICAPPED CRITERIA.
3. IF LESS THAN 1220 mm, FLARED SLOPE SHALL NOT EXCEED 1:12. IF 1220 mm OR GREATER, FLARED SLOPE SHALL NOT EXCEED 1:10.

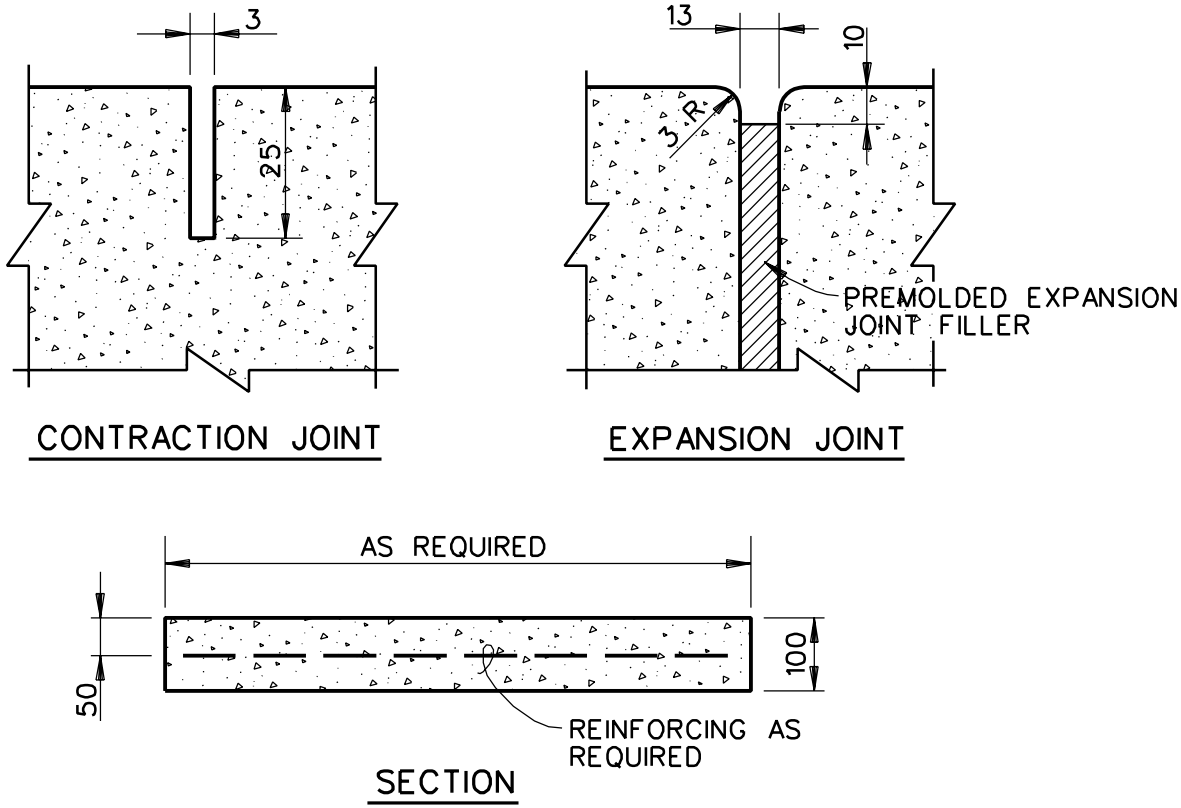

SIDEWALK DETAILS

N.T.S.

NOTES TO DESIGNER:

1. SIDEWALK REINFORCING SHALL BE 150 mm x 150 mm (6 inch x 6 inch) - W3 x W3 WELDED WIRE MESH. REINFORCING SHALL BE PROVIDED IN SIDEWALKS AT ALL ARMY INSTALLATIONS, ALL PROJECTS IN THE SAN ANTONIO AREA, AND AT SHEPPARD AIR FORCE BASE.
2. PROVIDE TRANSVERSE CONTRACTION JOINTS AT INTERVALS NOT EXCEEDING 1500 mm ON CENTER. PROVIDE CENTERLINE CONTRACTION JOINTS IN SIDEWALKS WIDER THAN 2500 mm. SPACING OF CENTERLINE CONTRACTION JOINTS SHALL NOT EXCEED 1830 mm.
3. PROVIDE EXPANSION JOINTS AT INTERVALS NOT EXCEEDING 12000 mm ON CENTER WHERE WALK DOES NOT ABUT CURB.

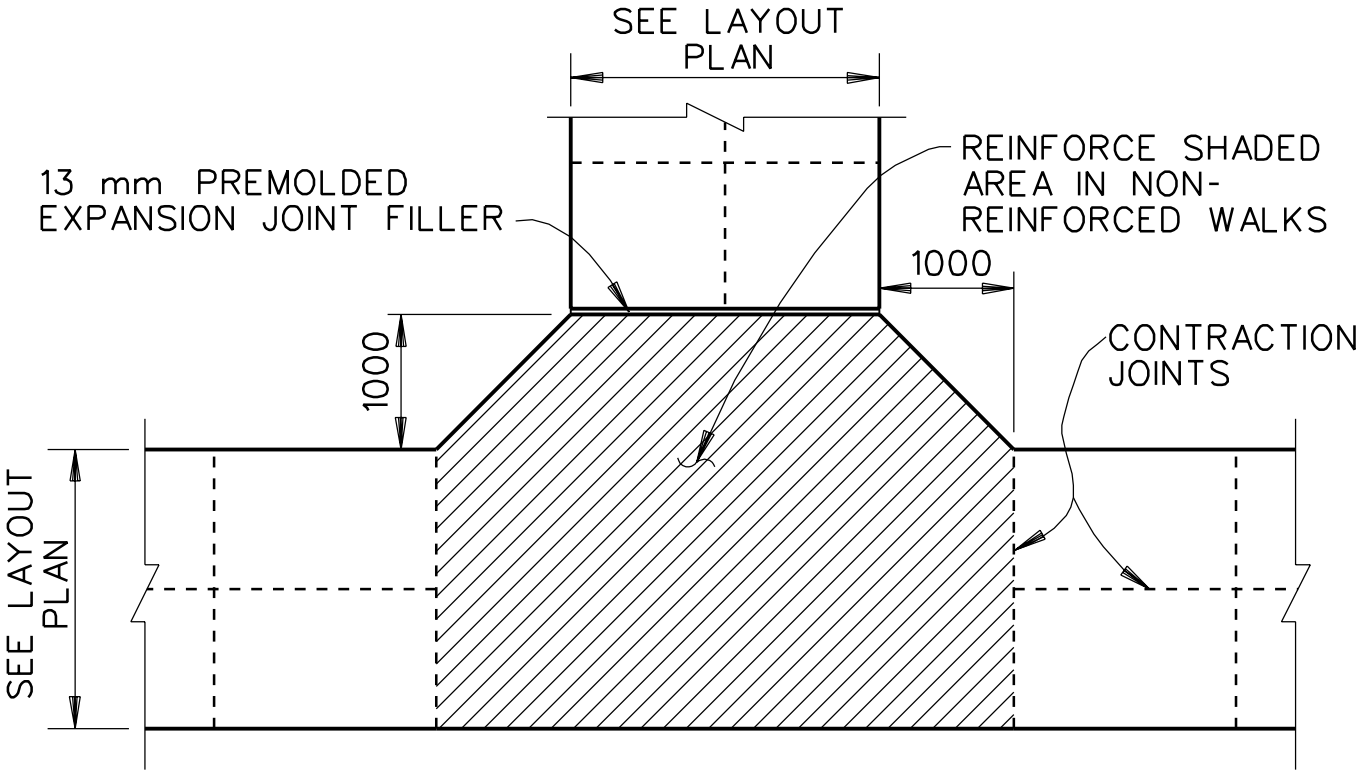

TEE INTERSECTION

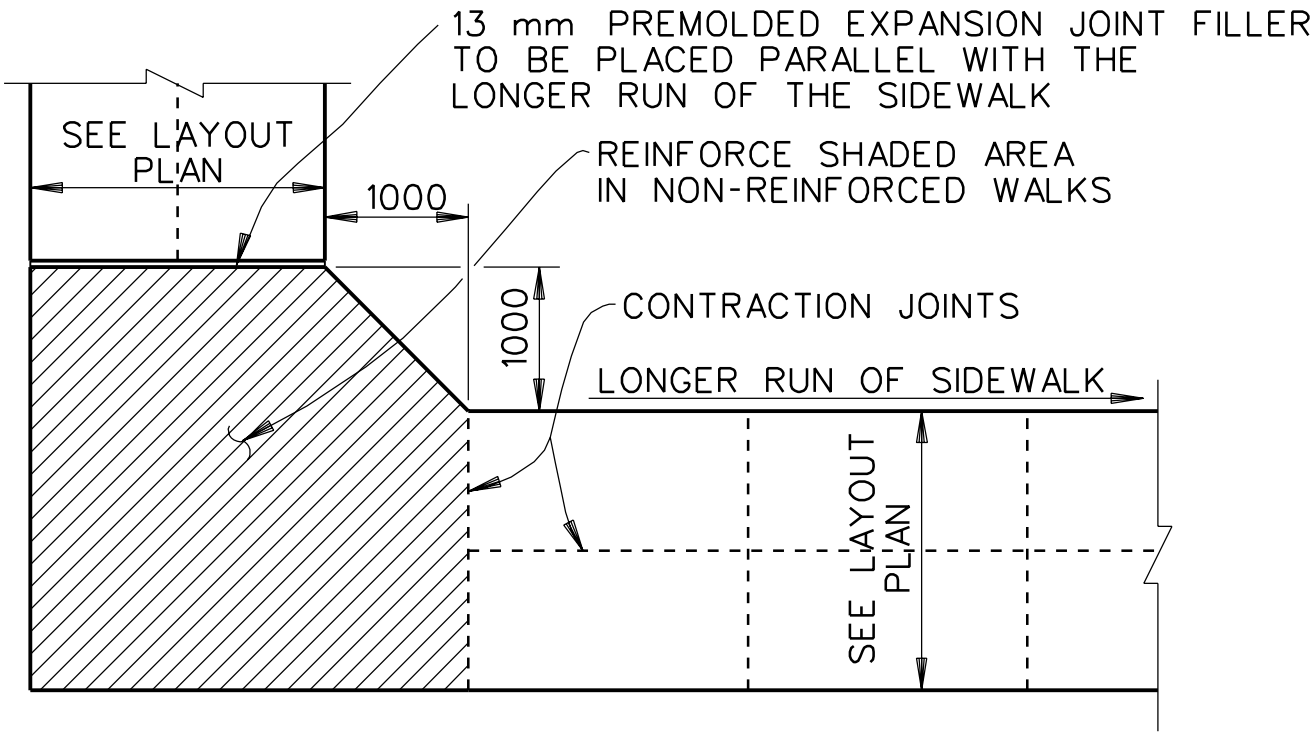

EL INTERSECTION

CONCRETE SIDEWALK INTERSECTION DETAILS

N.T.S.

PLATE C17

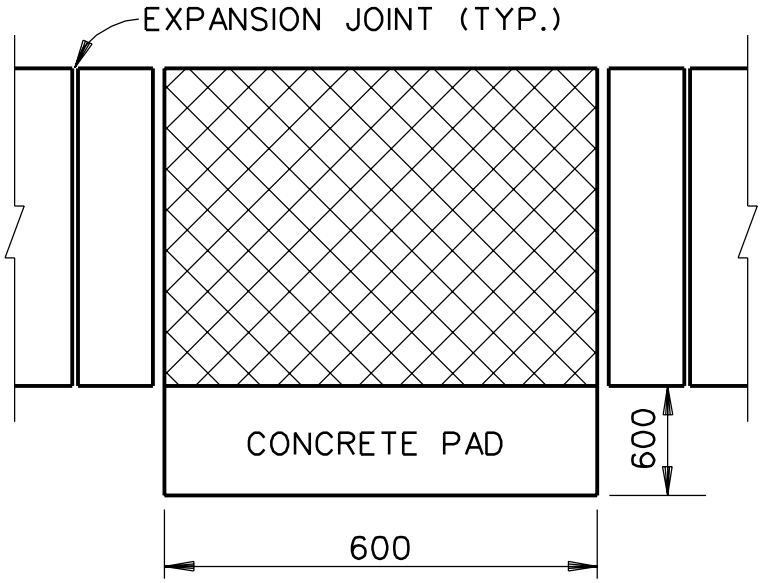

HALF PLAN

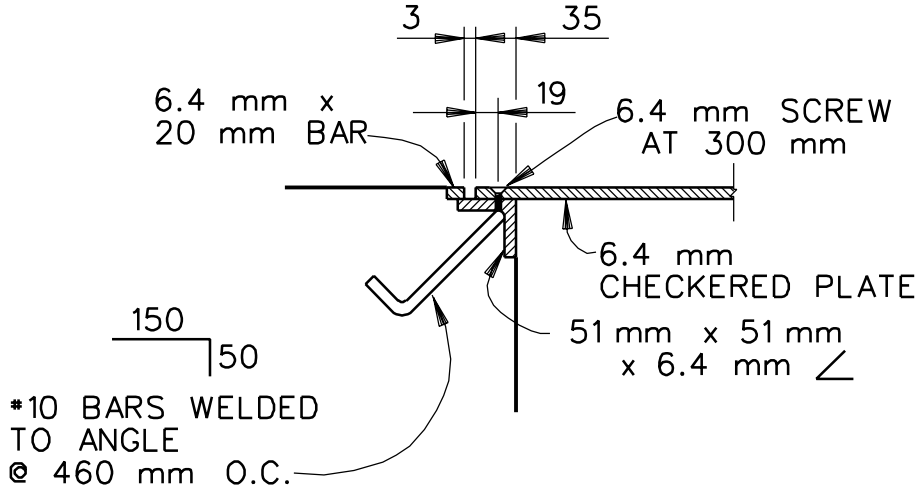

DETAIL "C"

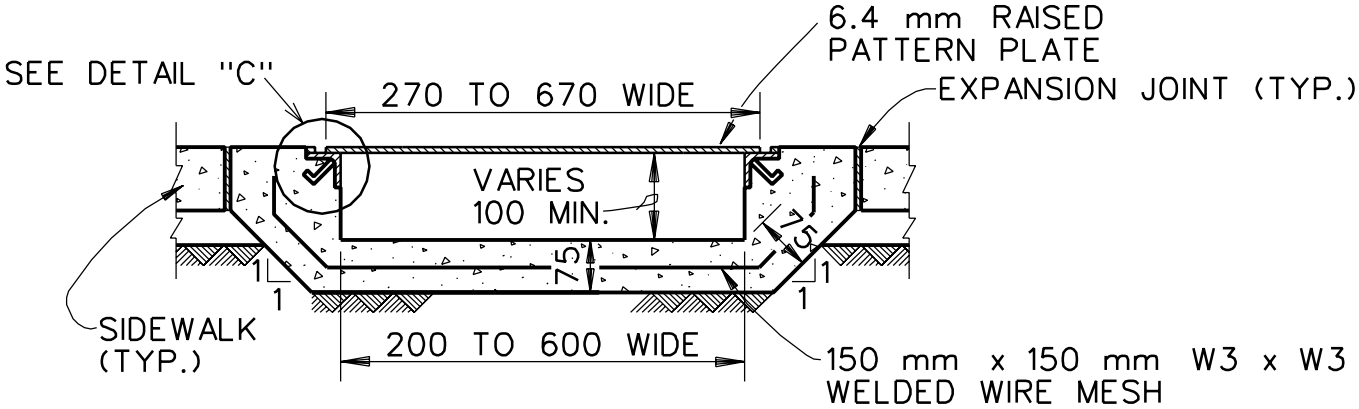

SECTION

SIDEWALK DRAIN DETAILS

N.T.S.

PLATE C18

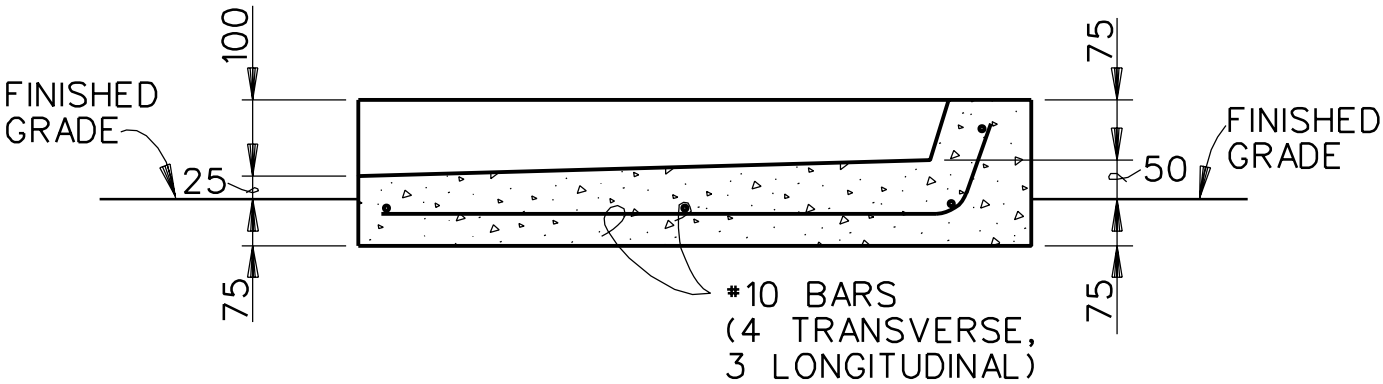

SECTION A

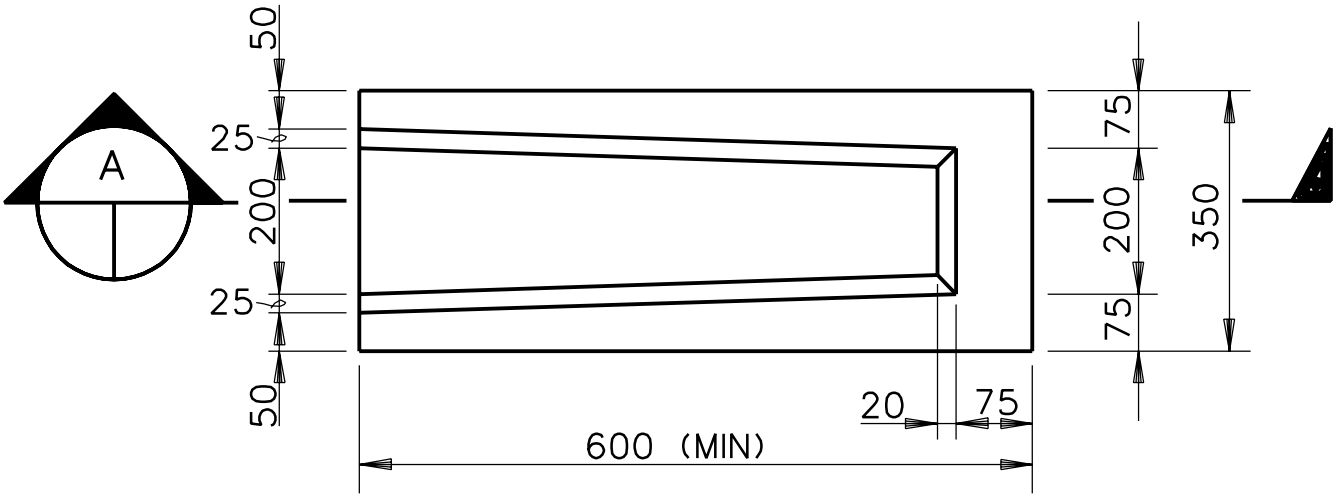

PLAN

SPLASH BLOCK DETAIL

N.T.S.

NOTE:
APPROVED STANDARD MANUFACTURED
SPLASH BLOCK MAY BE USED

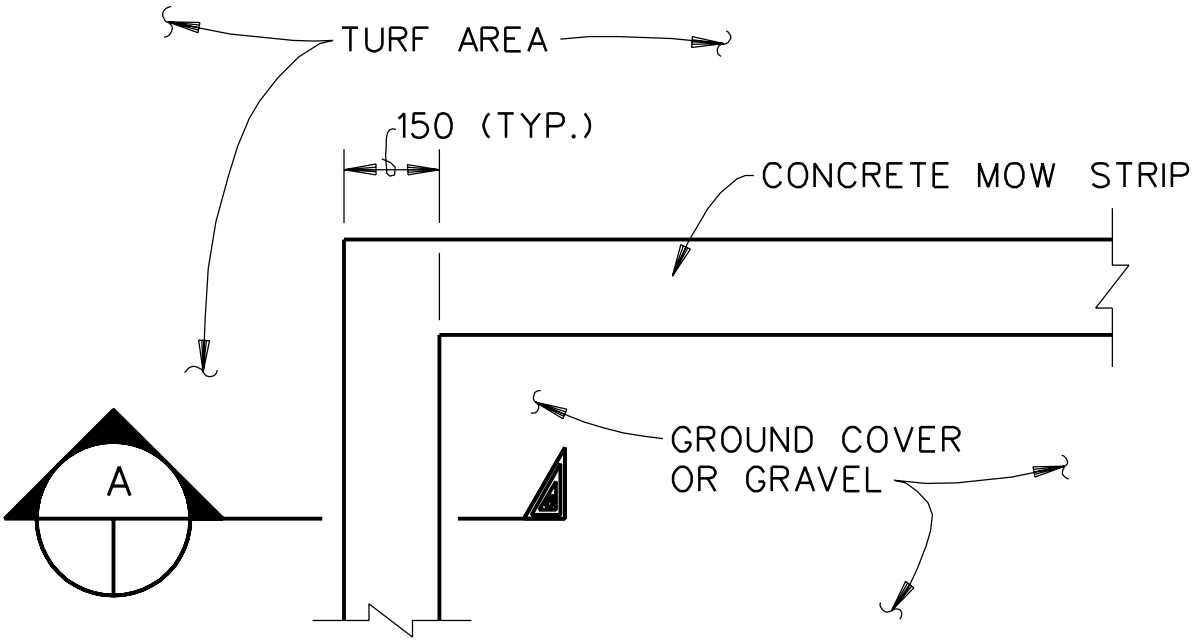

PLAN

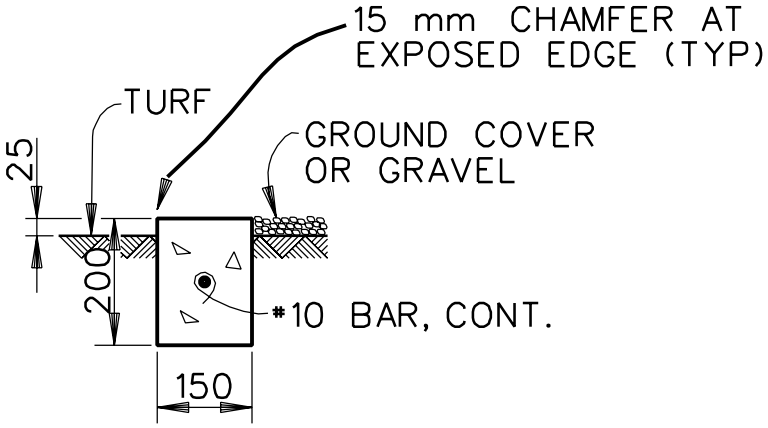

SECTION A

CONCRETE MOW STRIP DETAIL

N.T.S.

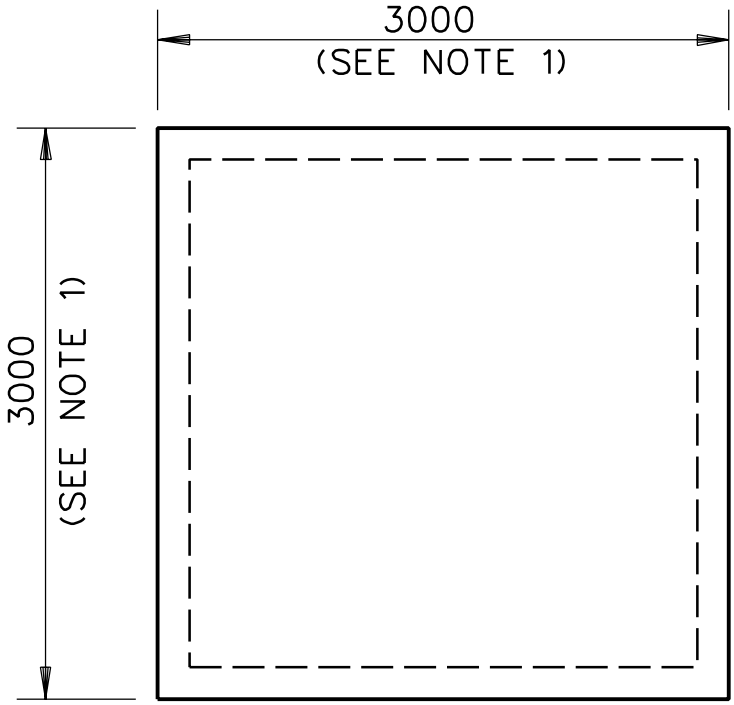

PLAN

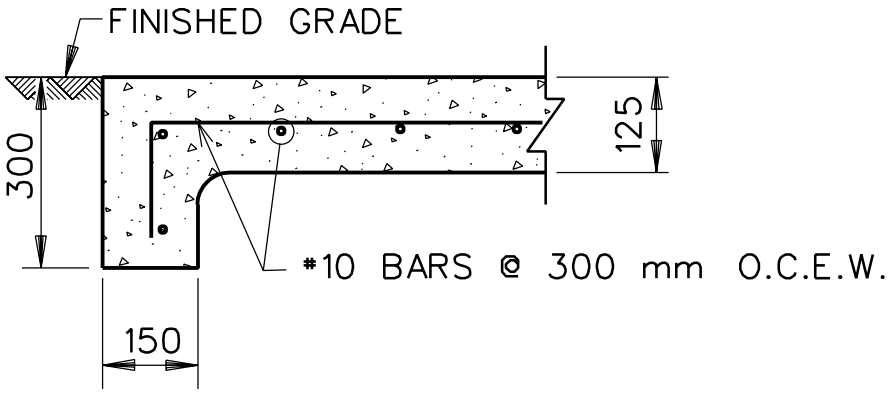

TYPICAL SECTION

DUMPSTER PAD DETAIL

N.T.S.

NOTES TO DESIGNER:

1. VERIFY PLAN DIMENSIONS OF PAD WITH USER
2. PROVIDE 5600 mm OF CONCRETE PAVEMENT IN FRONT OF DUMPSTER PAD

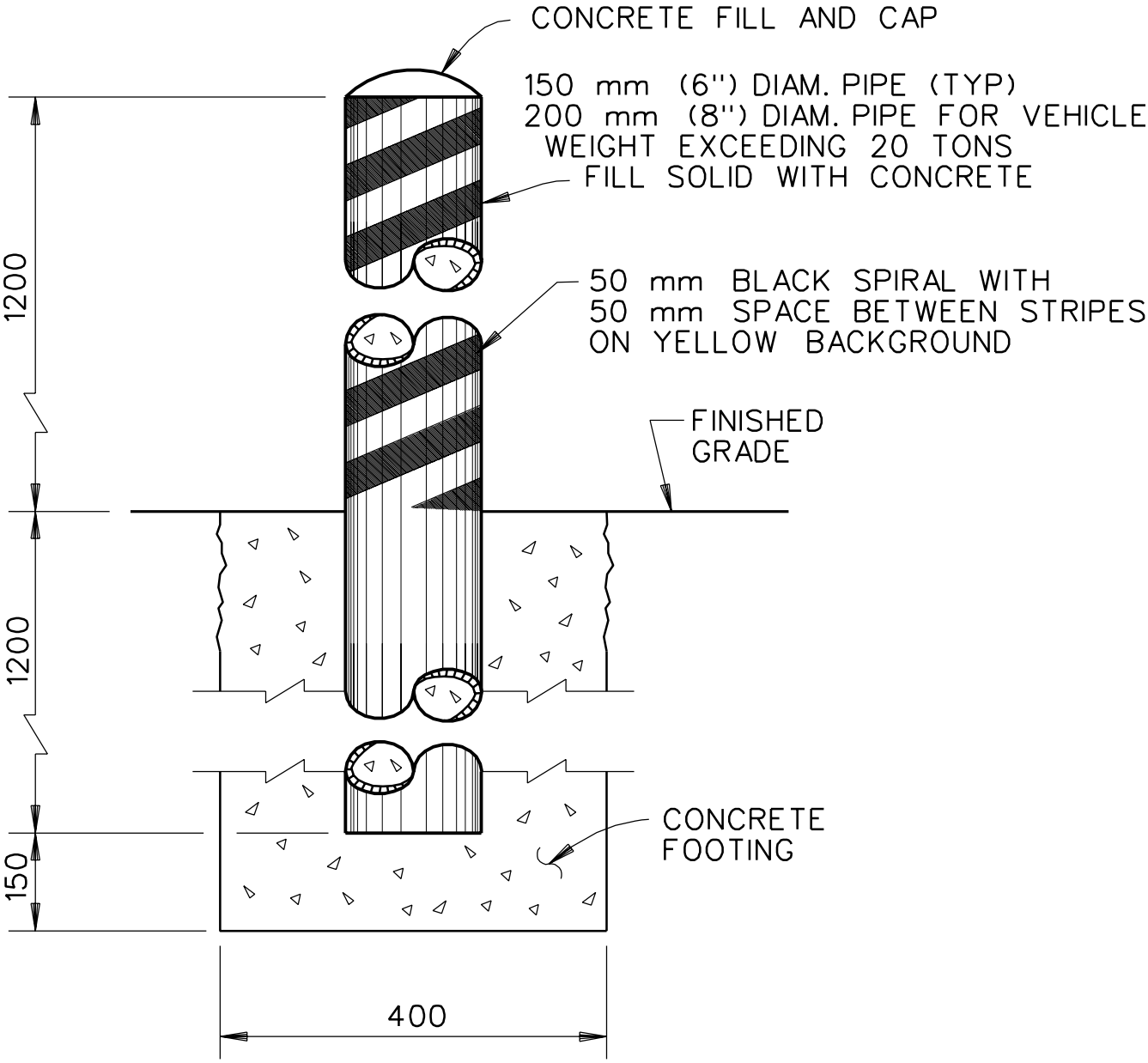

PIPE GUARD DETAIL

N.T.S.

NOTES TO DESIGNER:

PAINTING REQUIREMENTS, INCLUDING COLOR AND STRIPING, SHOULD BE COORDINATED WITH USER.

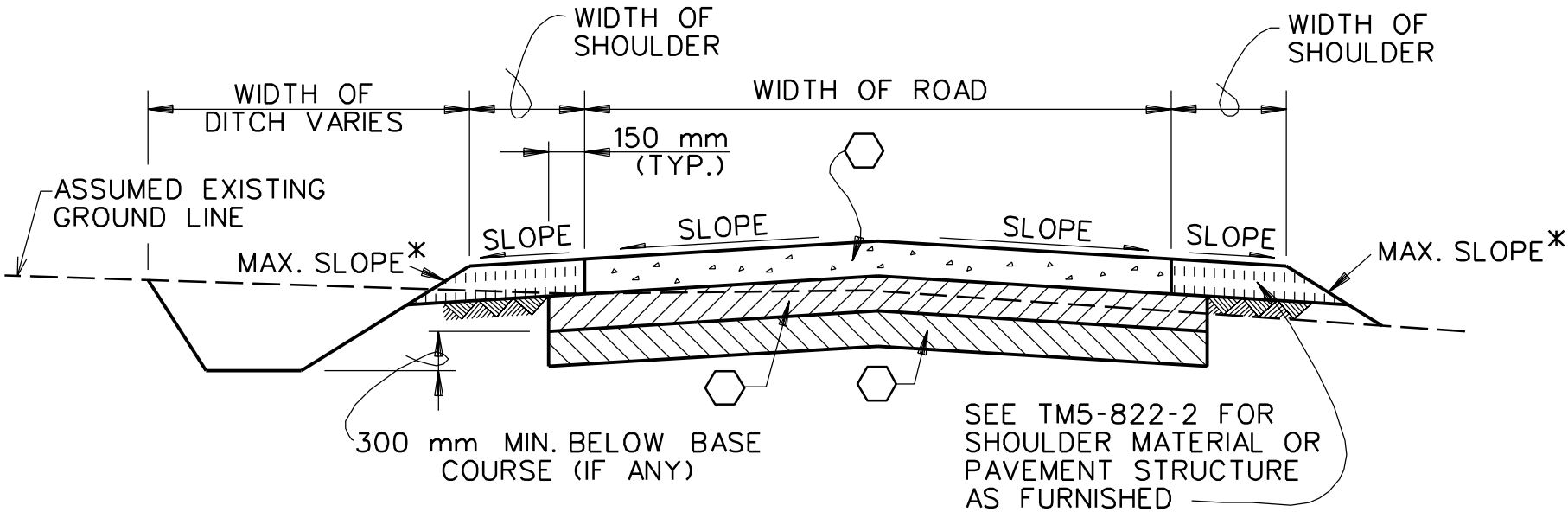

*DESIRABLE MAXIMUM SLOPE 1 ON 4; ABSOLUTE MAXIMUM 1 ON 3. PROVIDE SLOPE PROTECTION WHEN STEEPER SLOPES ARE NECESSARY.

TYPICAL ROAD SECTION - RIGID

N.T.S.

NOTES TO DESIGNER:

1. WIDTH AND CROSS SLOPES OF ROAD AND SHOULDERS SHALL BE IN ACCORDANCE WITH TM5-822-2.
2. IN ALL SECTIONS SHOW TYPES AND THICKNESSES OF ALL MATERIALS IN "PAVEMENT STRUCTURE" PRECISELY AS FURNISHED OR USE SYMBOLS AND PAVING NOTES.

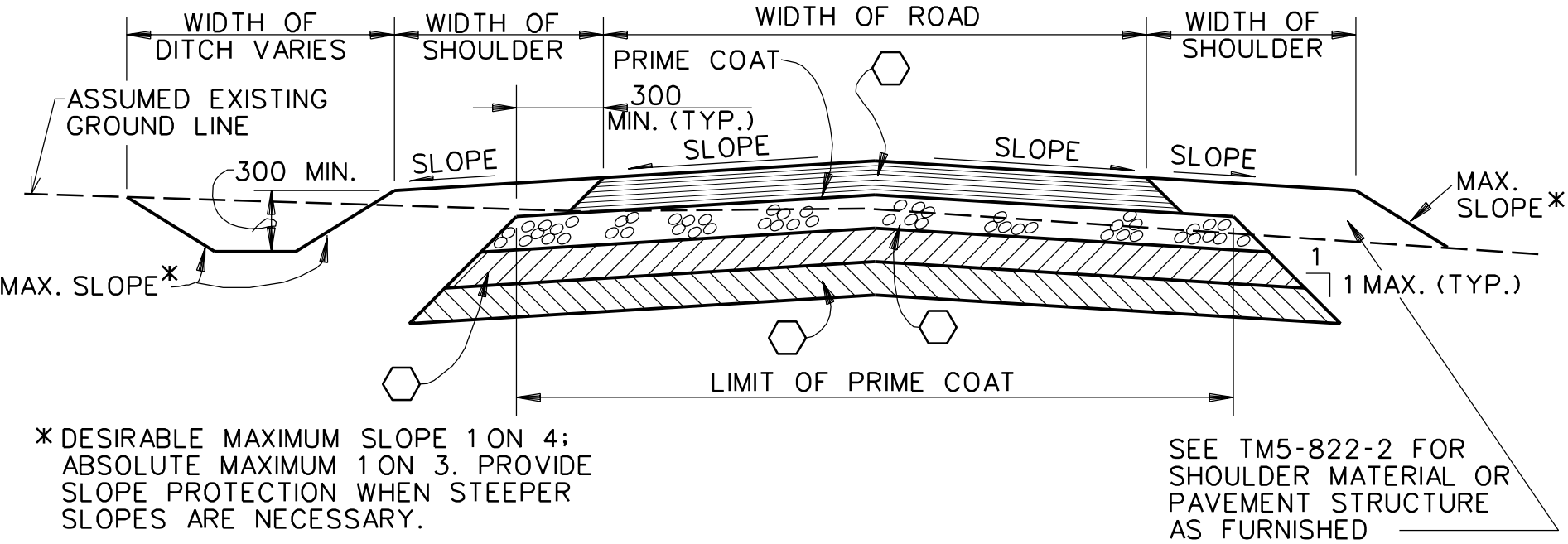

TYPICAL ROAD SECTION - FLEXIBLE

N.T.S.

NOTES TO DESIGNER:

1. WIDTH AND CROSS SLOPES OF ROAD AND SHOULDERS SHALL BE IN ACCORDANCE WITH TM5-822-2.
2. IN ALL SECTIONS SHOW TYPES AND THICKNESSES OF ALL MATERIALS IN "PAVEMENT STRUCTURE" PRECISELY AS FURNISHED OR USE SYMBOLS AND PAVING NOTES.

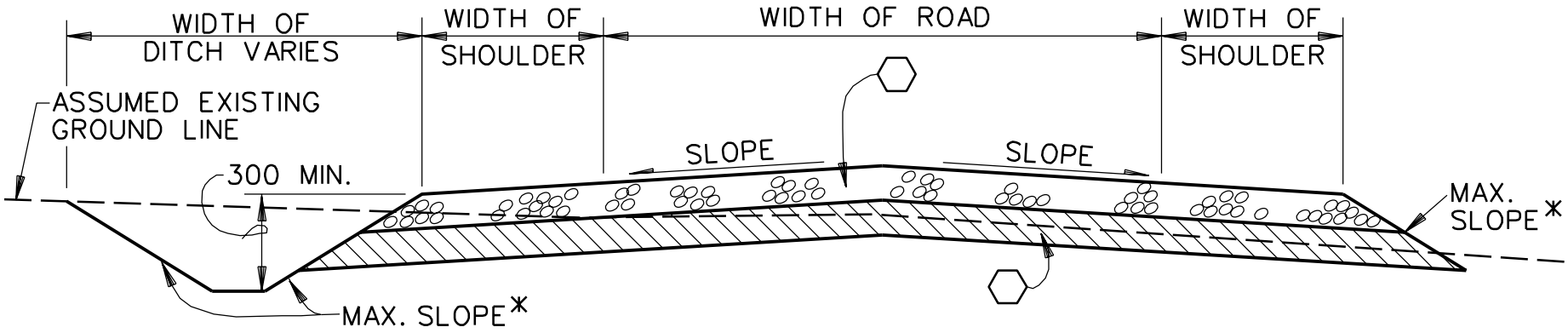

* DESIRABLE MAXIMUM SLOPE 1 ON 4; ABSOLUTE MAXIMUM 1 ON 3. PROVIDE SLOPE PROTECTION WHEN STEEPER SLOPES ARE NECESSARY.

TYPICAL ROAD SECTION - GRAVEL

N.T.S.

NOTES TO DESIGNER:

1. WIDTH AND CROSS SLOPES OF ROAD AND SHOULDERS SHALL BE IN ACCORDANCE WITH TM5-822-2.
2. IN ALL SECTIONS SHOW TYPES AND THICKNESSES OF ALL MATERIALS IN "PAVEMENT STRUCTURE" PRECISELY AS FURNISHED OR USE SYMBOLS AND PAVING NOTES.

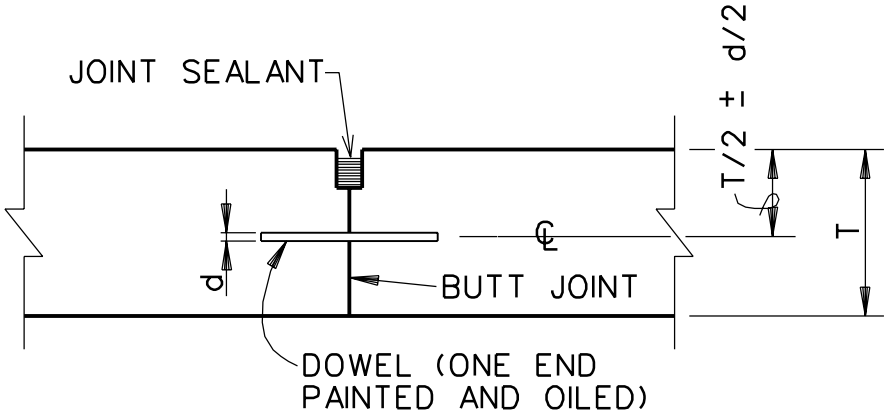

TRANSVERSE OR LONGITUDINAL

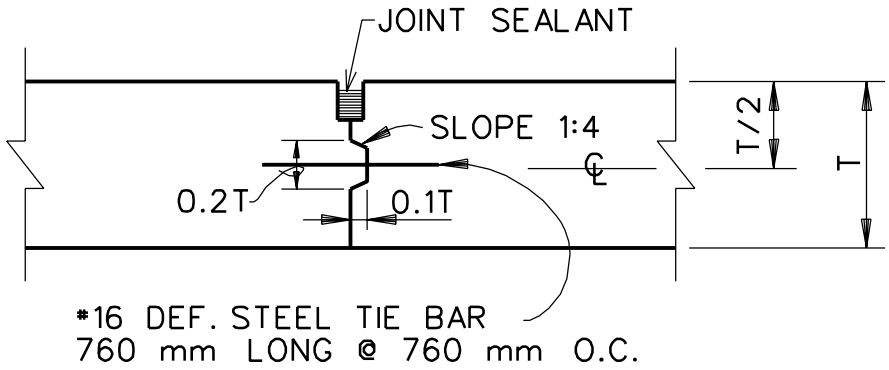

LONGITUDINAL

NOTE: SEE JOINT SEALANT DETAILS, ON PLATE C-30.

CONSTRUCTION JOINTS

(PLAIN CONCRETE PAVEMENTS)
N.T.S.

NOTES TO DESIGNER:

1. KEYED LONGITUDINAL CONSTRUCTION JOINTS SHALL NOT BE USED IN PAVEMENTS 200 mm OR LESS IN THICKNESS, EXCEPT AS REQUIRED AT THE CENTER OF 2-LANE PAVEMENTS.
2. FOR PAVEMENTS MORE THAN 200 mm IN THICKNESS, A KEYED LONGITUDINAL CONSTRUCTION JOINT SHALL BE USED. TIE BARS ARE NOT REQUIRED EXCEPT AT THE CENTER OF 2-LANE PAVEMENTS.
3. PROVIDE REQ'D. DOWEL SIZE AND SPACING IN ACCORDANCE WITH TM5-822-5.

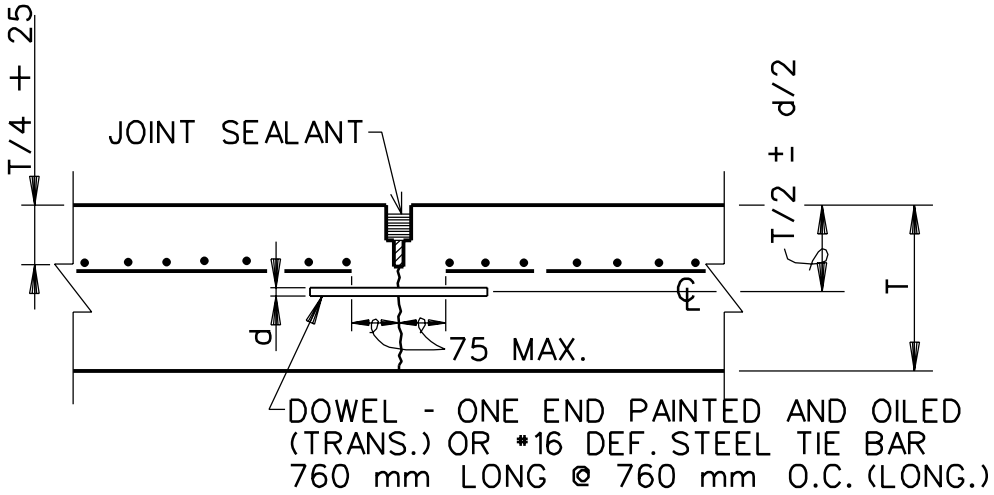

TRANSVERSE OR LONGITUDINAL

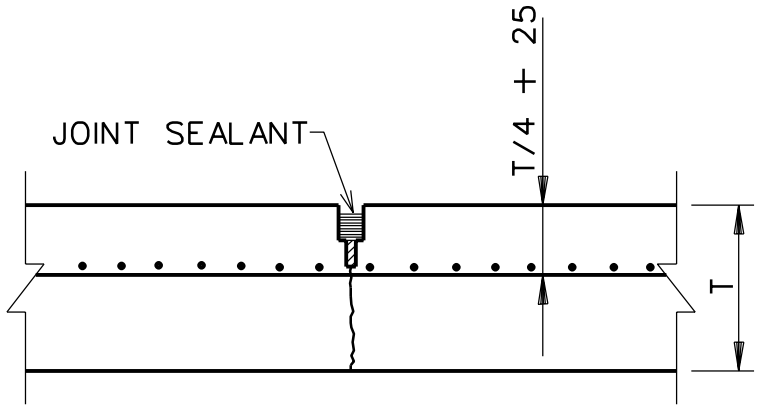

LONGITUDINAL (1)

NOTE: SEE JOINT SEALANT DETAILS, PLATE C-30.

CONTRACTION JOINT

(REINFORCED PAVEMENT)
N.T.S.

NOTES TO DESIGNER:

1. CONDITION WHERE TWO TRAFFIC LANES ARE PLACED AS A SINGLE PAVING LANE. WHEN JOINT IS REQUIRED AT THE CENTERLINE, REINFORCING STEEL IS NOT CARRIED THROUGH THE JOINT AND TIE BARS SHALL BE USED.
2. PROVIDE REQ'D. DOWEL SIZE AND SPACING IN ACCORDANCE WITH TM 5-822-5.

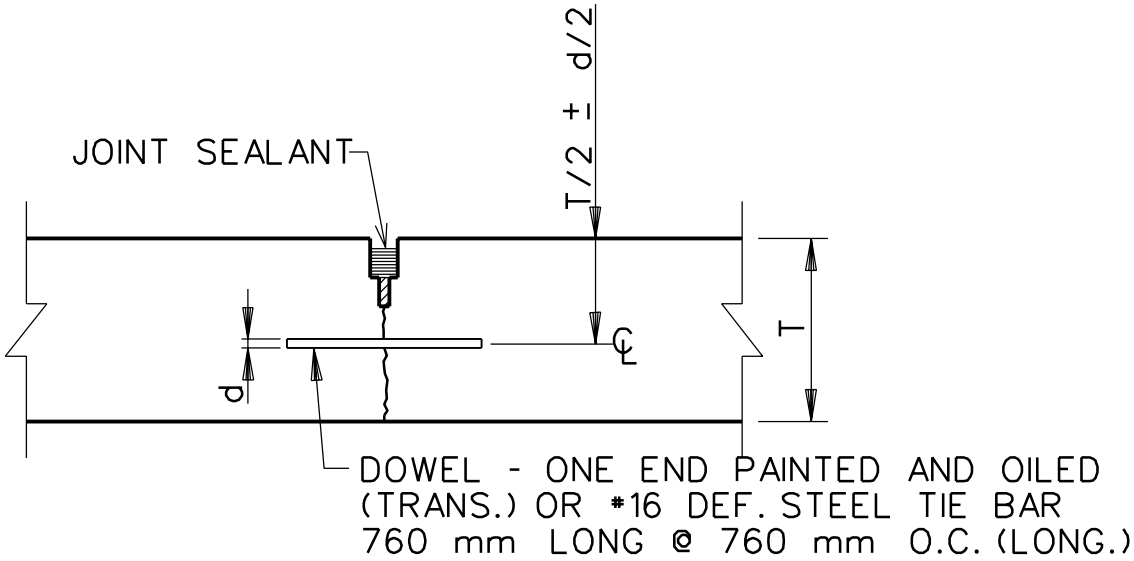

LONGITUDINAL OR TRANSVERSE

NOTE: SEE JOINT SEALANT DETAILS, PLATE C-30.

CONTRACTION JOINT

(PLAIN CONCRETE PAVEMENT)
N.T.S.

NOTES TO DESIGNER:

1. DOWEL TO BE USED ON TRANSVERSE JOINTS FOR CLASS "A" AND "B" PAVEMENTS ONLY.
2. IF DOWEL IS REQUIRED, PROVIDE SIZE AND SPACING IN ACCORDANCE WITH TM 5-822-5.
3. FOR AIRFIELD PAVEMENTS REQUIRING USE OF PREFORMED ELASTOMERIC SEALS, JOINT SEALANT DIMENSIONS SHALL BE REVISED TO ACCOMODATE SEAL.

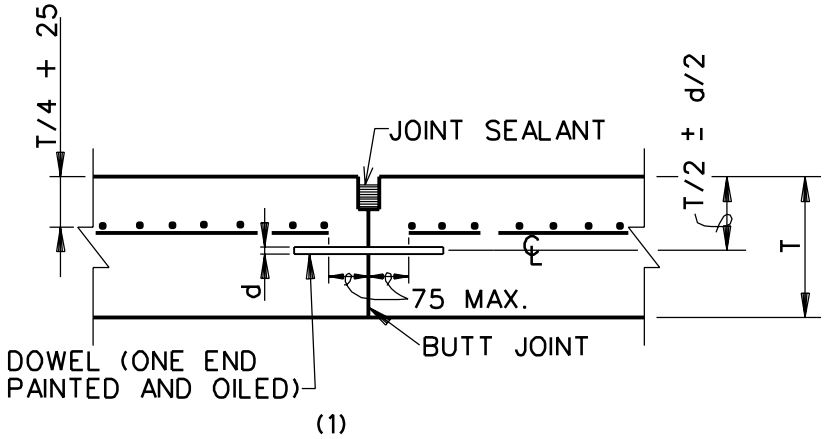

TRANSVERSE (1) OR LONGITUDINAL

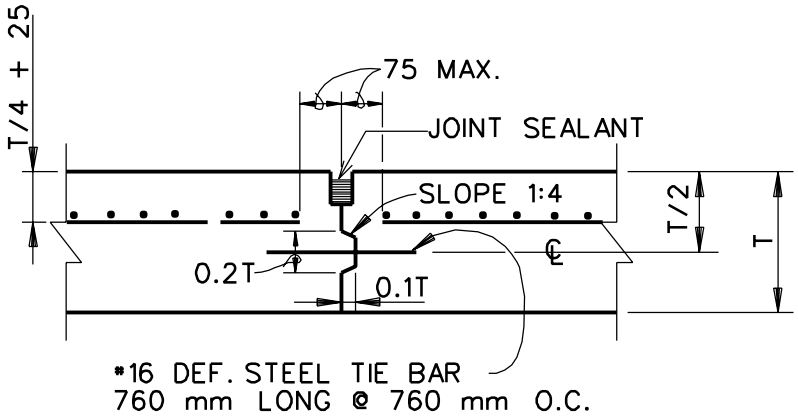

LONGITUDINAL

NOTE: SEE JOINT SEALANT DETAILS, PLATE C-30.

CONSTRUCTION JOINTS

(REINFORCED PAVEMENTS)
N.T.S.

NOTES TO DESIGNER:

(1) 1. JOINT SHOWN TO BE USED AT A REGULARLY SCHEDULED TRANSVERSE CONTRACTION JOINT. FOR A TRANSVERSE CONSTRUCTION JOINT AT A LOCATION OTHER THAN REGUARLY SCHEDULED CONTRACTION JOINT:
   a) THE REINFORCEMENT SHALL BE CARRIED THROUGH THE JOINT.
   b) DOWELS SHALL NOT BE PAINTED OR OILED.
   c) NO GROOVE OR JOINT SEAL NEEDS TO BE PROVIDED.

2. KEYED LONGITUDINAL CONSTRUCTION JOINTS SHALL NOT BE USED IN PAVEMENTS 200 mm OR LESS IN THICKNESS, EXCEPT AS REQUIRED AT THE CENTER OF 2-LANE PAVEMENTS.

3. FOR PAVEMENTS MORE THAN 200 mm IN THICKNESS, A KEYED LONGITUDINAL CONSTRUCTION JOINT SHALL BE USED. TIE BARS ARE NOT REQUIRED EXCEPT AT THE CENTER OF 2-LANE PAVEMENTS.

4. PROVIDE REQ'D. DOWEL SIZE AND SPACING IN ACCORDANCE WITH TM 5-822-5.

5. FOR AIRFIELD PAVEMENTS REQUIRING USE OF PREFORMED ELASTOMERIC SEALS, JOINT SEALANT DIMENSIONS SHALL BE REVISED TO ACCOMODATE SEAL.

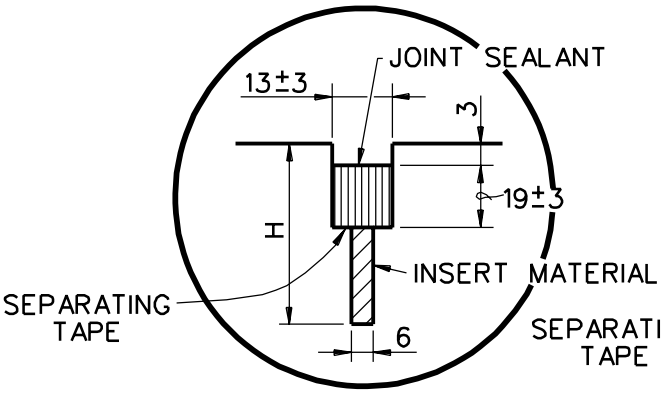

INSERT TYPE

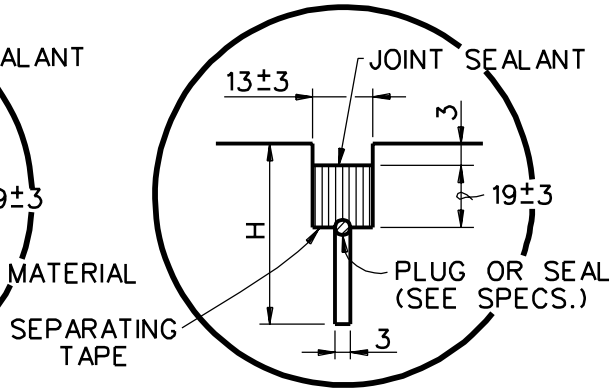

SAWED

CONTRACTION JOINT OPTIONS

FOR USE WITH JOINT SPACING UP TO 7.5 METERS

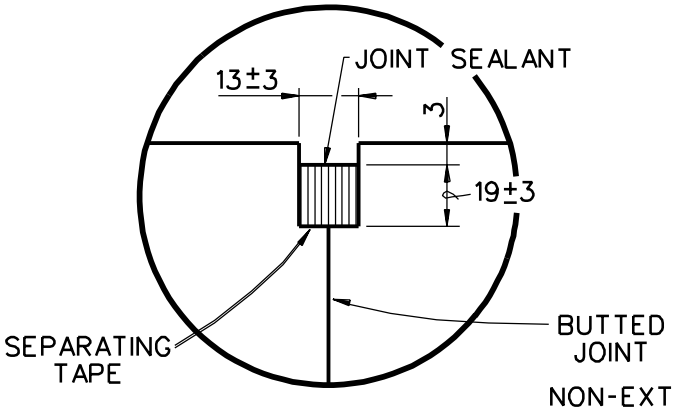

CONSTRUCTION JOINTS

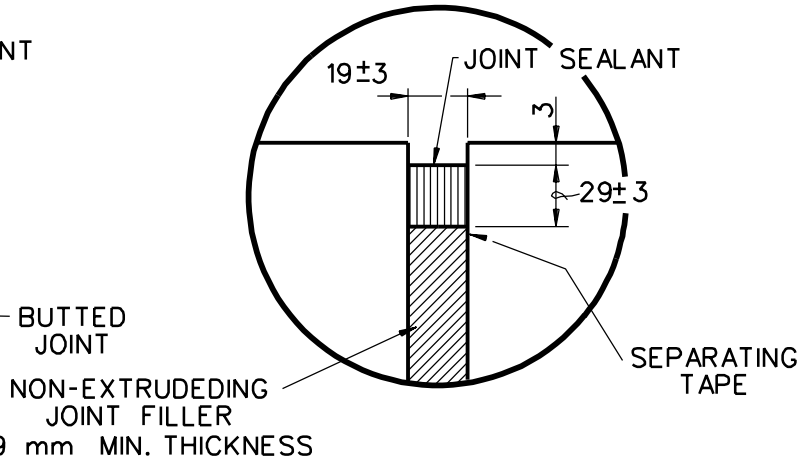

EXPANSION JOINTS

JOINT SEALANT DETAILS
ROADS, STREETS AND OPEN STORAGE AREAS

N. T. S.

NOTES TO DESIGNER:

1. H = 1/4 SLAB THICKNESS FOR PAVEMENT LESS THAN 300 mm THICK; 75 mm FOR PAVEMENT 300 mm to 460 mm THICK; 1/6 SLAB THICKNESS FOR PAVEMENT GREATER THAN 460 mm THICK.
2. JOINT SEALANT WILL BE RECESSED 8 mm ± 2 mm ON PAVEMENTS USED BY TRACKED VEHICLES. OTHER DIMENSIONS WILL STILL APPLY (I.E. JOINT SEALANT @ 20 mm ± 3 mm).
3. FOR AIRFIELD PAVEMENTS REQUIRING USE OF PREFORMED ELASTOMERIC SEALS, JOINT SEALANT DIMENSIONS SHALL BE REVISED TO ACCOMODATE SEAL.
4. PREFORMED COMPRESSION JOINT SEALANTS SHALL COMPLY WITH TM5-822-5 AND THE SPECIFICATIONS. RECOMMENDED WHEN JOINT SPACINGS ARE GREATER THAN 7.5 METERS AND REQUIRED WHEN EXCEEDING 15 METERS.

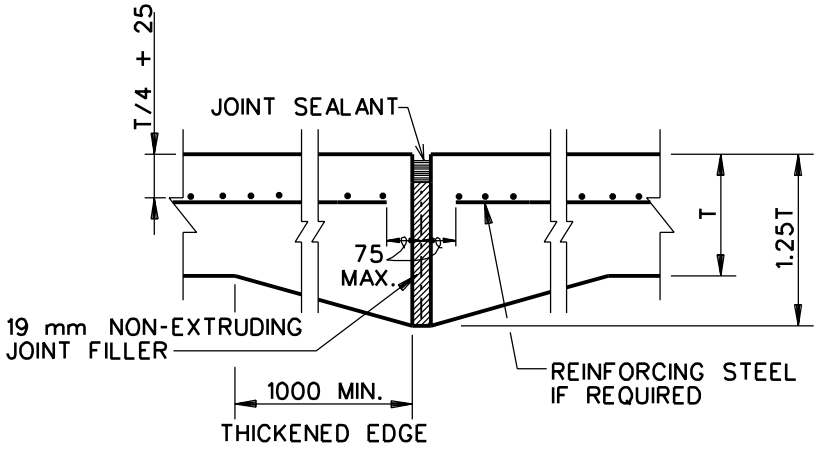

THICKENED EDGE EXPANSION JOINT

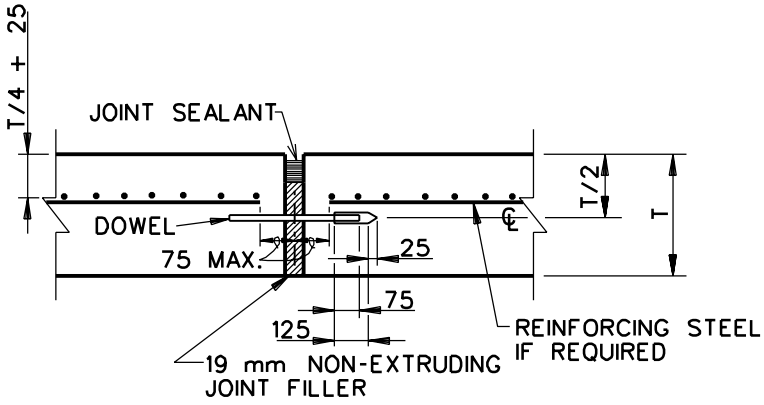

DOWELED EXPANSION JOINT

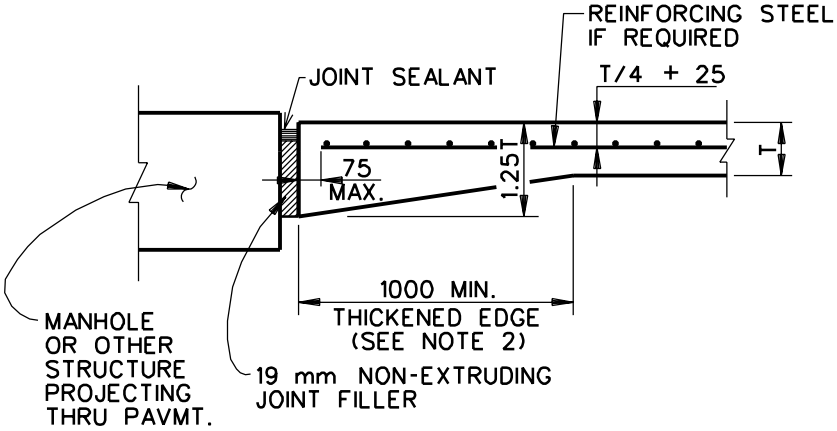

AT STRUCTURES

NOTES TO DESIGNER:

1. SEE PLATE C-30 FOR JOINT SEALANT DETAILS.
2. THICKENED EDGE IS NOT REQUIRED ABUTTING BLDG. FOUNDATIONS; HOWEVER, AT VEHICULAR ACCESS RAMPS, JOINT WILL BE DOWELED.
3. IF DOWEL IS REQUIRED, PROVIDE SIZE AND SPACING.
4. FOR AIRFIELD PAVEMENTS REQUIRING USE OF PREFORMED ELASTOMERIC SEALS, JOINT SEALANT DIMENSIONS SHALL BE REVISED TO ACCOMODATE SEAL.

NOTE: SEE JOINT SEALANT DETAILS, PLATE C-30.

EXPANSION JOINTS

(PLANE CONCRETE AND REINFORCED PAVEMENTS)
N.T.S.

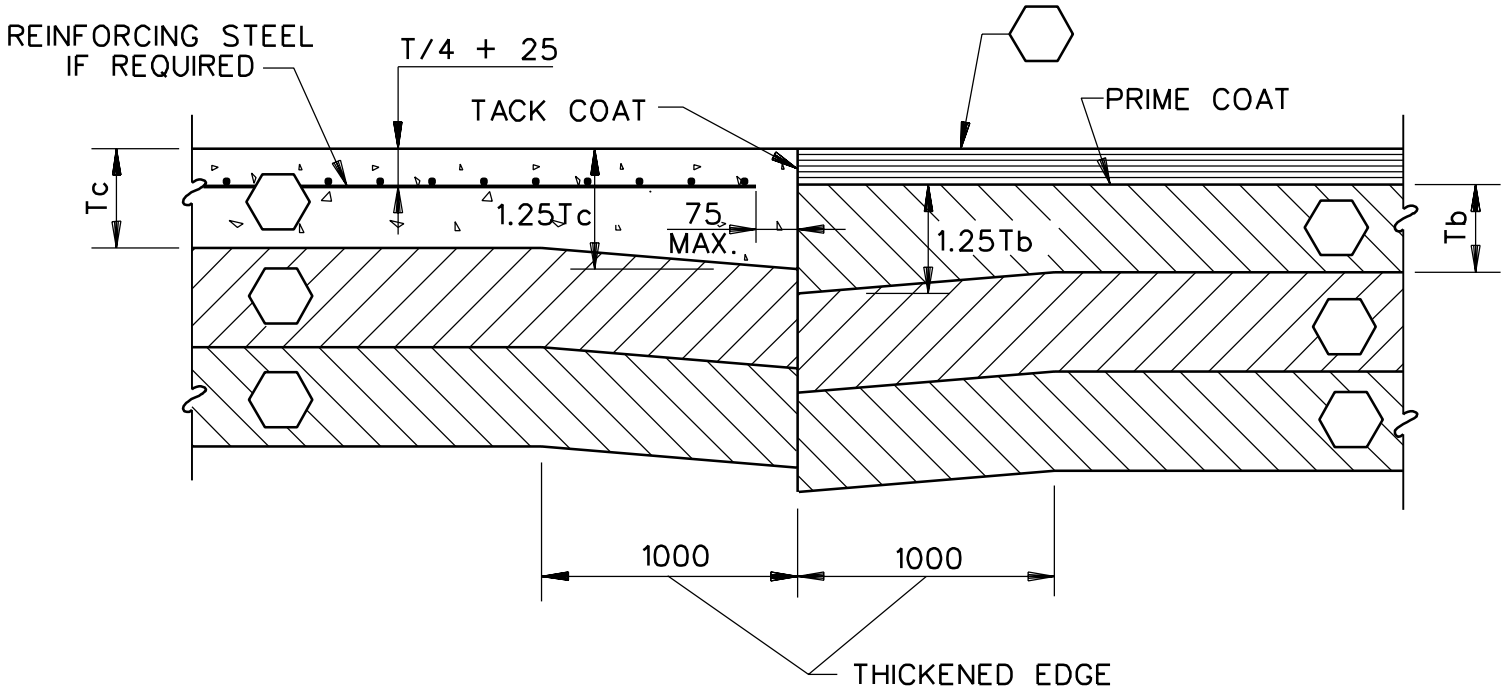

JUNCTURE OF NEW FLEXIBLE AND NEW RIGID PAVEMENT

N.T.S.

NOTE TO DESIGNER:

IDENTIFY TYPES AND THICKNESSES OF ALL MATERIALS IN "PAVEMENT STRUCTURES" PRECISELY AS FURNISHED OR USE SYMBOLS AND PAVING NOTES

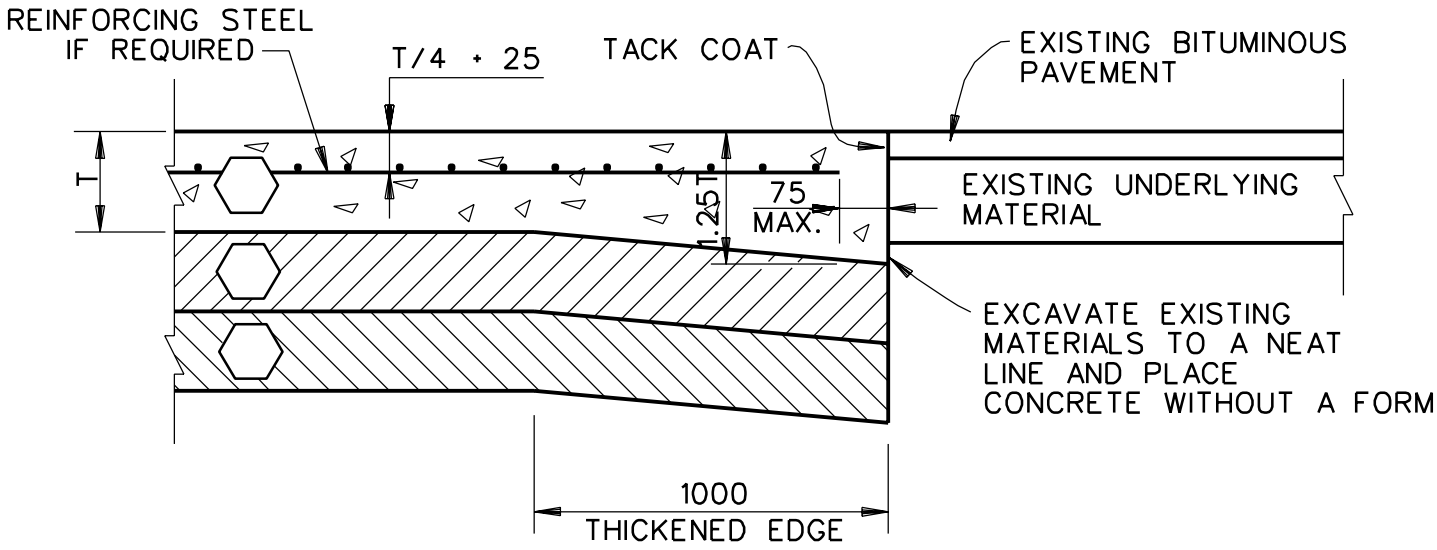

JUNCTURE OF NEW RIGID AND EXISTING FLEXIBLE PAVEMENT

N.T.S.

NOTES TO DESIGNER:

1. IDENTIFY TYPES AND THICKNESSES OF ALL MATERIALS IN "PAVEMENT STRUCTURE" PRECISELY AS FURNISHED OR USE SYMBOLS AND PAVING NOTES.
2. THIS SECTION MAY BE USED IF THE FOLLOWING CIRCUMSTANCES EXIST:
   A. THE EXISTING BITUMINOUS PAVEMENT HAS GOOD QUALITY AND SUFFICIENT THICKNESS.
   B. IT IS KNOWN THAT THE PROFILE OF THE EXISTING PAVEMENT IS SUCH THAT A FINISHED PROFILE OF THE EDGE OF THE NEW CONCRETE PAVEMENT WILL PRESENT A GOOD APPEARANCE AND WILL NOT RESTRICT DRAINAGE.

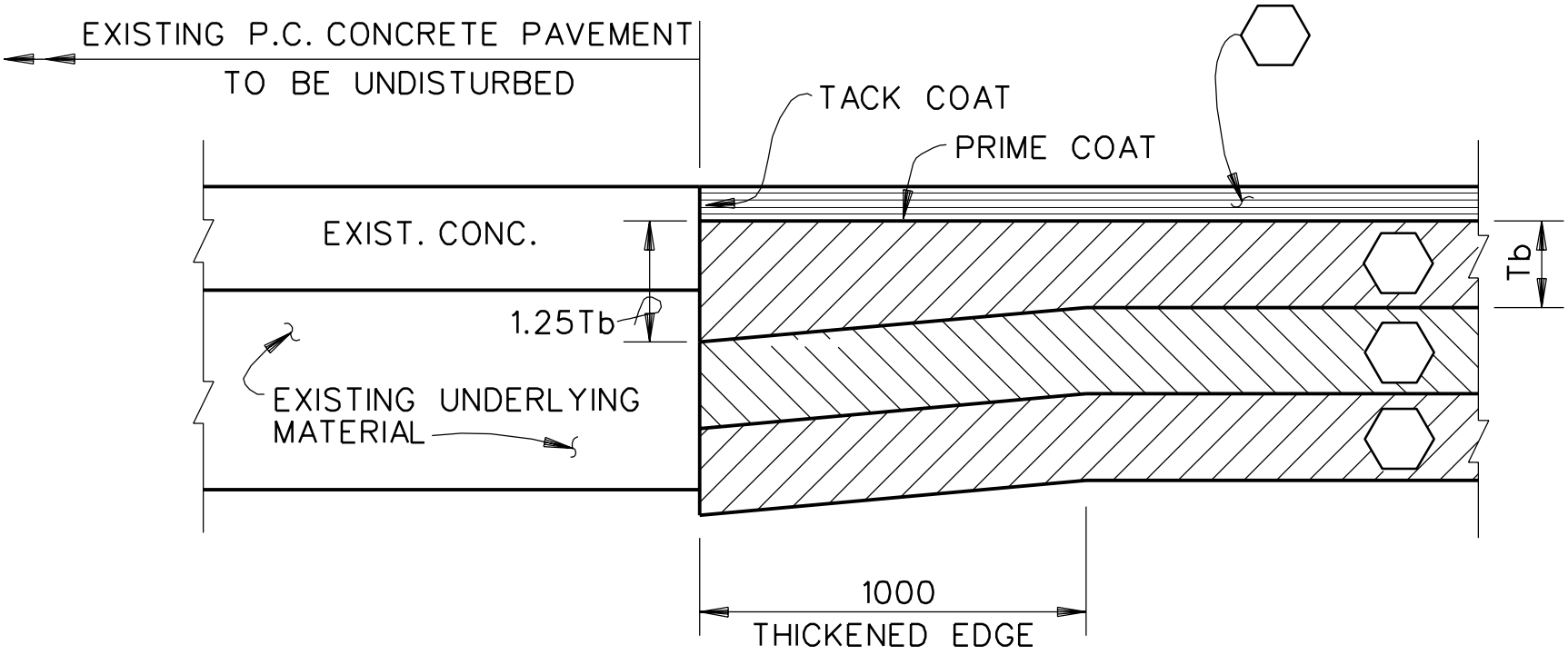

JUNCTURE OF NEW FLEXIBLE AND EXISTING RIGID PAVEMENT

N.T.S.

NOTE TO DESIGNER:

IDENTIFY TYPES AND THICKNESSES OF ALL MATERIALS IN "PAVEMENT STRUCTURE" PRECISELY AS FURNISHED OR USE SYMBOLS AND PAVING NOTES.

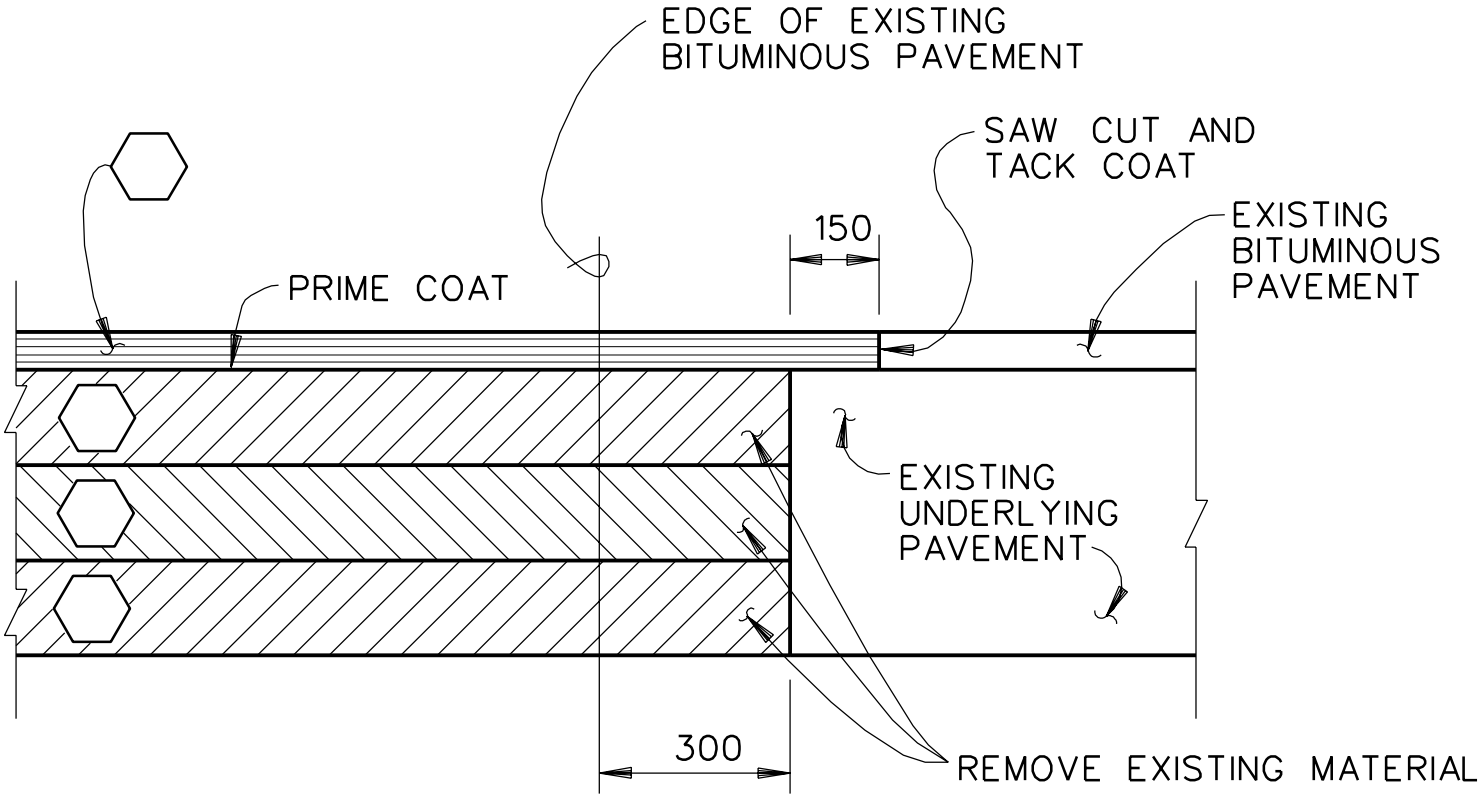

JUNCTURE OF NEW FLEXIBLE AND EXISTING FLEXIBLE PAVEMENT

N.T.S.

NOTE TO DESIGNER:

IDENTIFY TYPES AND THICKNESSES OF ALL MATERIALS IN "PAVEMENT STRUCTURE" PRECISELY AS FURNISHED OR USE SYMBOLS AND PAVING NOTES.

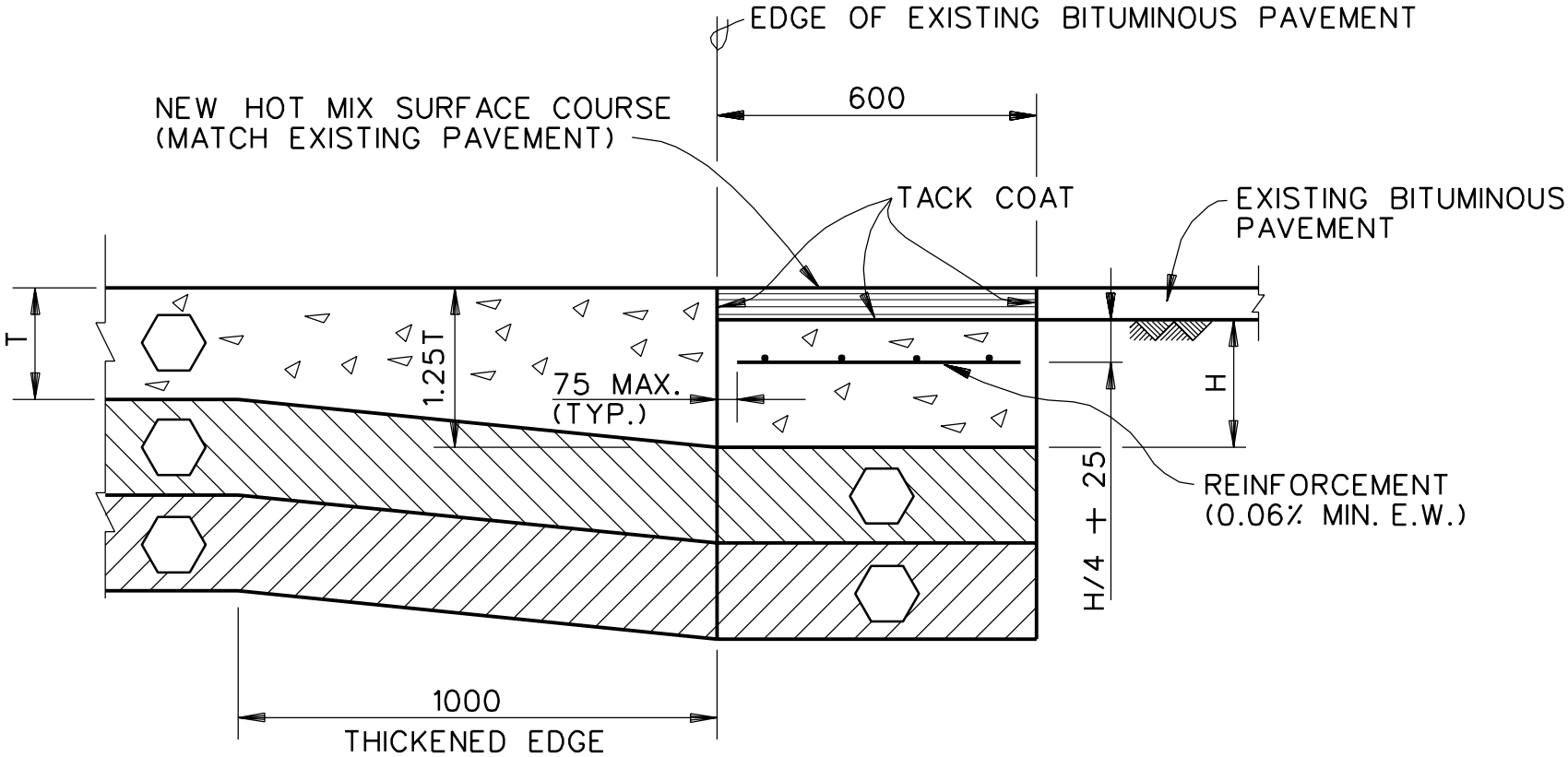

CONCRETE HEADER DETAIL

N.T.S.

NOTE TO DESIGNER:

IDENTIFY TYPES AND THICKNESSES OF ALL NEW MATERIALS IN "PAVEMENT STRUCTURE" PRECISELY AS FURNISHED OR USE SYMBOLS AND PAVING NOTES.

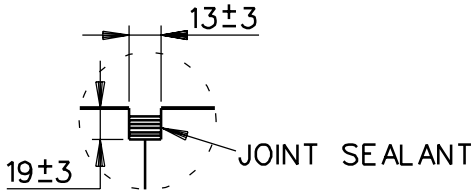

DETAIL "B"
N.T.S.

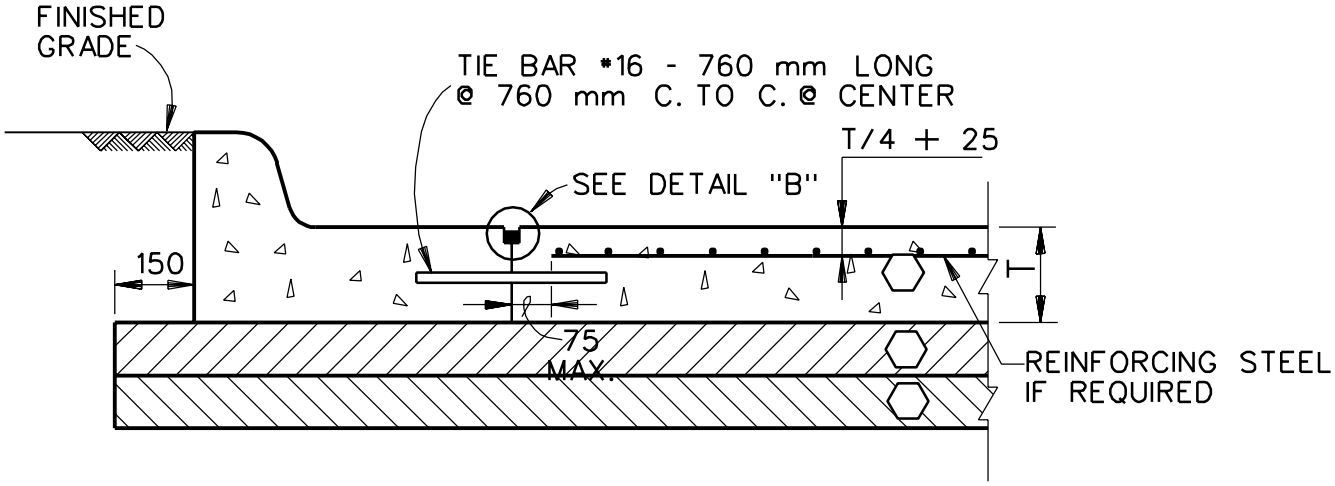

RIGID PAVEMENT WITH CURB AND GUTTER

N.T.S.

NOTES TO DESIGNER:

1. WHEN CURB IS TO BE CONSTRUCTED MONOLITHICALLY OR INTEGRALLY WITH THE SLAB, DELETE THE JOINT AND INDICATE "INTEGRAL OR MONOLITHIC CURB".
2. IDENTIFY TYPES AND THICKNESSES OF ALL MATERIALS IN "PAVEMENT STRUCTURES" PRECISELY AS FURNISHED OR USE SYMBOLS AND PAVING NOTES.

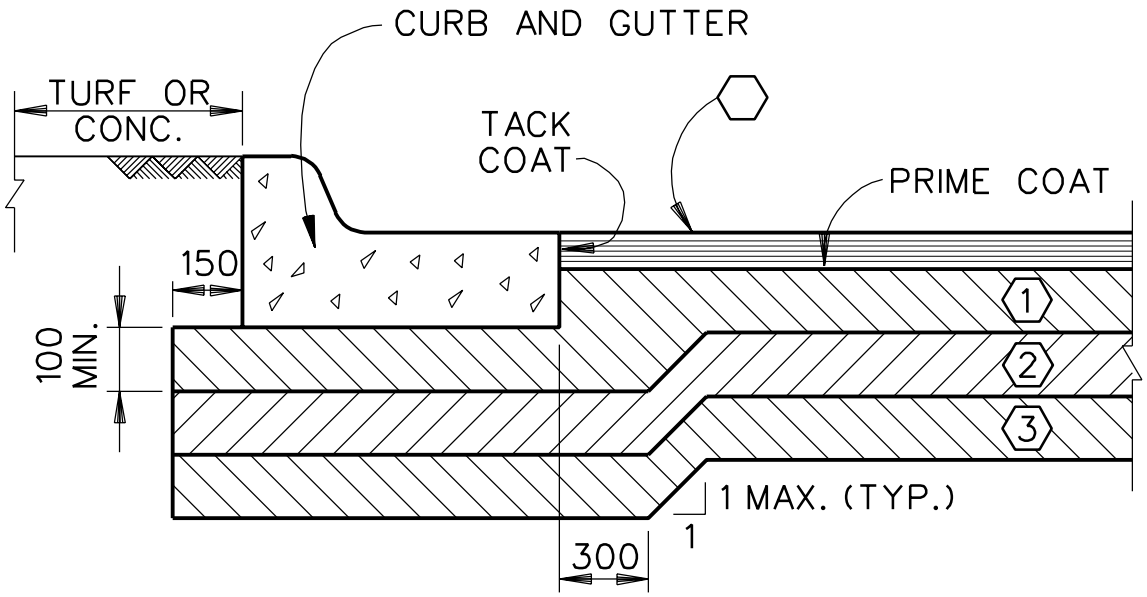

NEW FLEXIBLE PAVEMENT WITH CURB AND GUTTER

N.T.S.

NOTES TO DESIGNER:

1. IDENTIFY TYPES AND THICKNESSES OF ALL MATERIALS IN "PAVEMENT STRUCTURES" PRECISELY AS FURNISHED OR USE SYMBOLS AND PAVING NOTES.
2. NO EXPANSION JOINT IS NECESSARY BETWEEN BACK OF CURB AND SIDEWALK.
3. FORT POLK PROJECTS INVOLVING SUB-BASE WILL NOT REQUIRE THE 1 ON 1 SLOPE, AND MATERIAL ⟨1⟩ WILL TERMINATE AT THE FACE OF THE GUTTER. (MATERIAL ⟨2⟩ WILL LIE DIRECTLY BENEATH THE CURB AND GUTTER.)

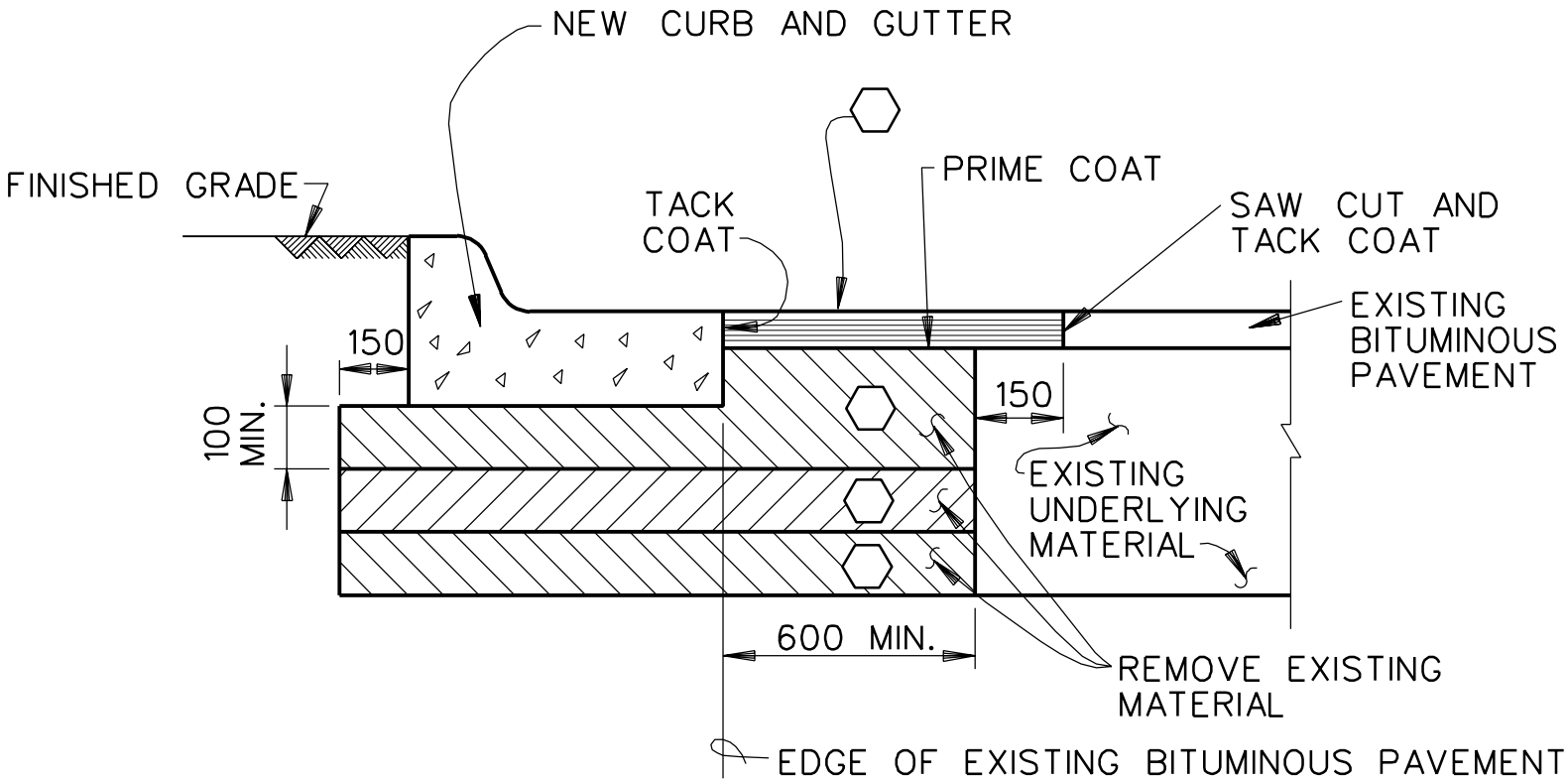

NEW CURB AND GUTTER ABUTTING EXISTING FLEXIBLE PAVEMENT

N.T.S.

NOTE TO DESIGNER:

IDENTIFY TYPES AND THICKNESSES OF ALL MATERIALS IN "PAVEMENT STRUCTURES" PRECISELY AS FURNISHED OR USE SYMBOLS AND PAVING NOTES.

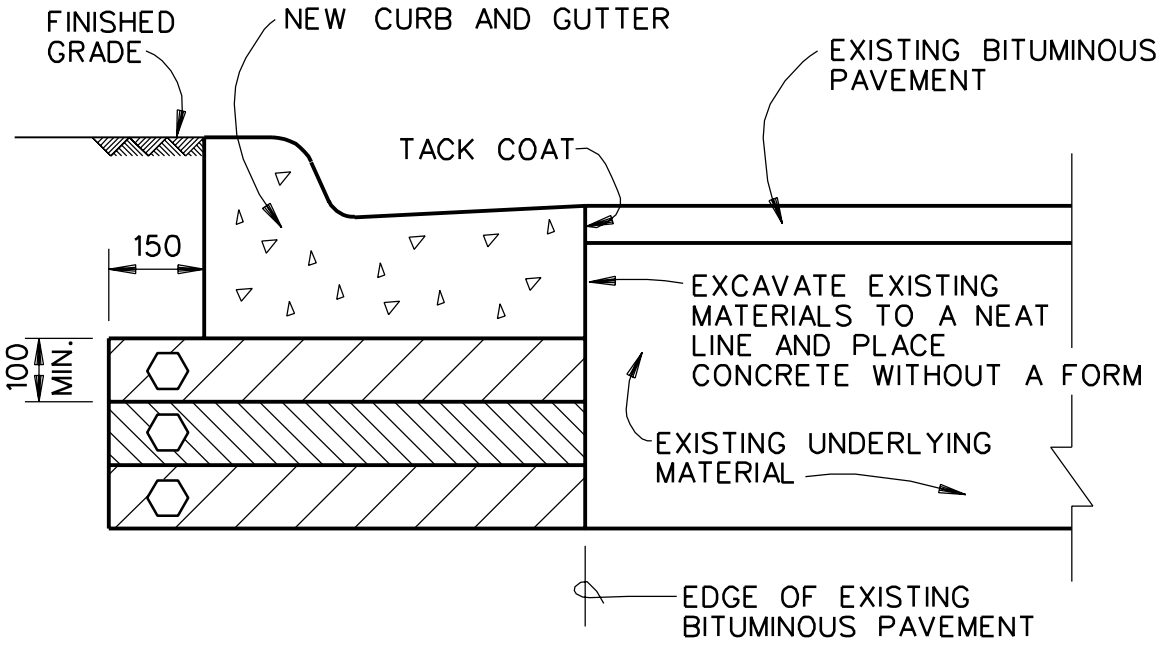

NEW CURB AND GUTTER ABUTTING EXISTING FLEXIBLE PAVEMENT

N.T.S.

NOTES TO DESIGNER:

1. IDENTIFY TYPES AND THICKNESSES OF ALL MATERIALS IN "PAVEMENT STRUCTURE" PRECISELY AS FURNISHED OR USE SYMBOLS AND PAVING NOTES.
2. THIS SECTION MAY BE USED IF ALL OF THE FOLLOWING CIRCUMSTANCES EXIST:
   - A. NEW HOT MIX PAVEMENT IS NOT OTHERWISE REQUIRED IN THE JOB.
   - B. THE EXISTING BITUMINOUS PAVEMENT HAS GOOD QUALITY AND SUFFICIENT THICKNESS.
   - C. IT IS KNOWN THAT THE PROFILE OF THE EXISTING PAVEMENT IS SUCH THAT A FINISHED PROFILE OF THE FACE OF THE GUTTER WILL PRESENT A GOOD APPEARANCE AND WILL NOT RESTRICT DRAINAGE.

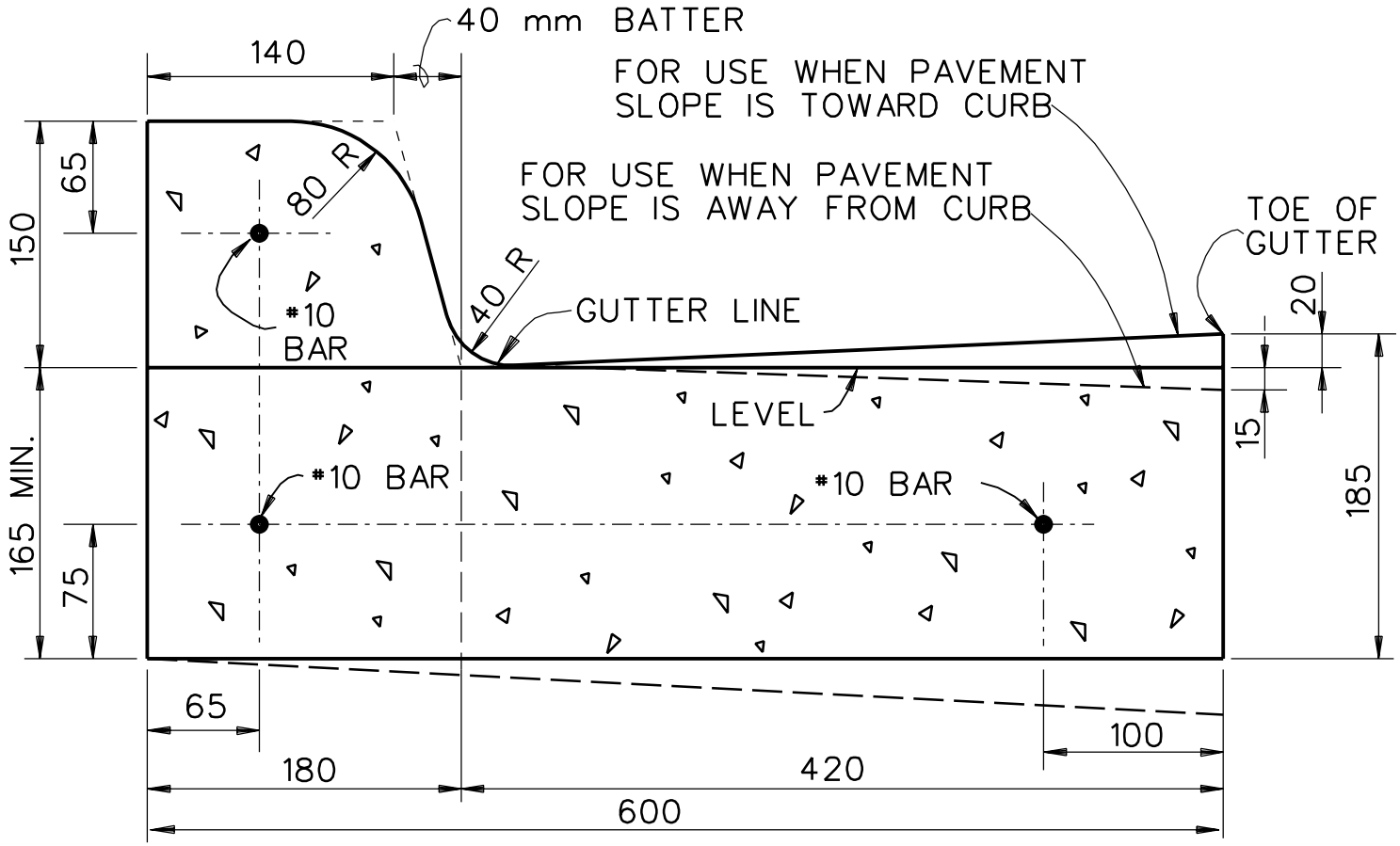

STANDARD BARRIER TYPE CONCRETE CURB AND GUTTER

N.T.S.

NOTE TO DESIGNER:

REINFORCING BARS TO BE USED FOR ALL ARMY PROJECTS, ALL PROJECTS IN THE SAN ANTONIO AREA, AND AT SHEPPARD AIR FORCE BASE.

CURB SCHEDULE				
CURB SIZE	W	X	Y	Z
75	75	92	83	40
100	100	56	100	65
125	125	49	100	65

NOTE TO DESIGNER:

REINFORCING BARS TO BE USED FOR ALL ARMY PROJECTS, ALL PROJECTS IN THE SAN ANTONIO AREA, AND AT SHEPPARD AIR FORCE BASE.

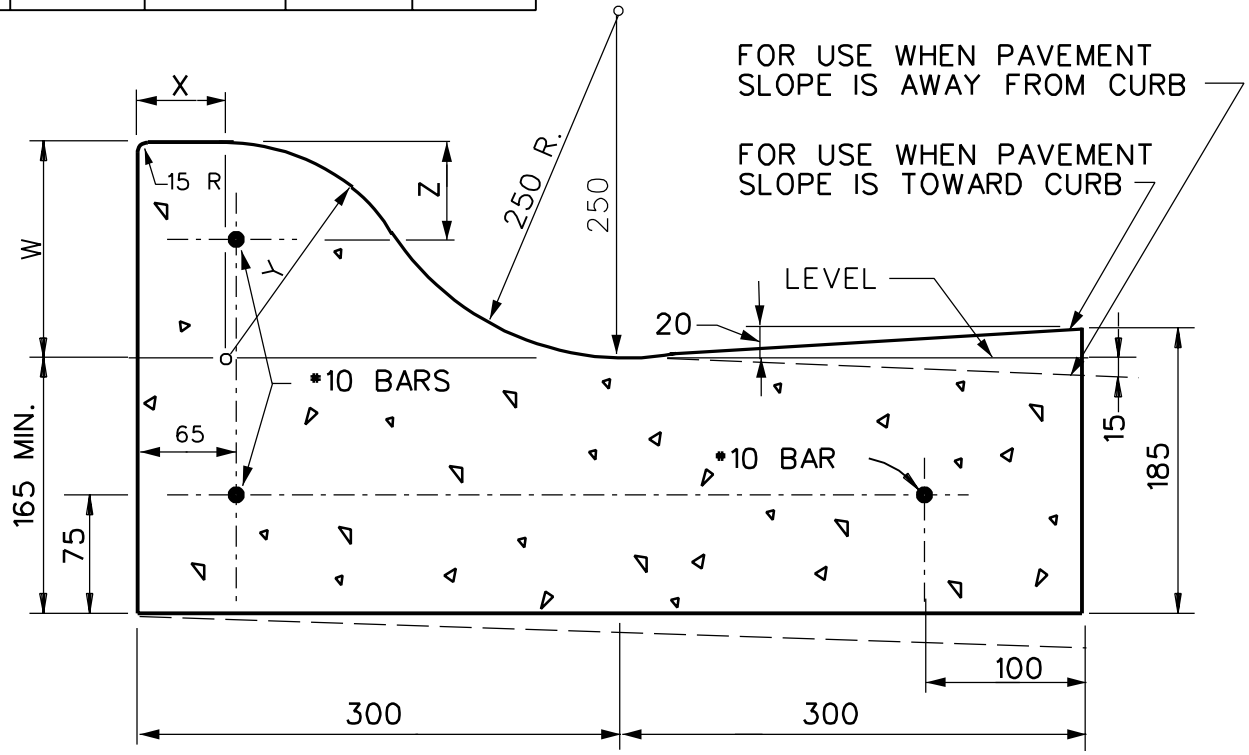

MOUNTABLE CONCRETE CURB AND GUTTER

N.T.S.

PLATE C42

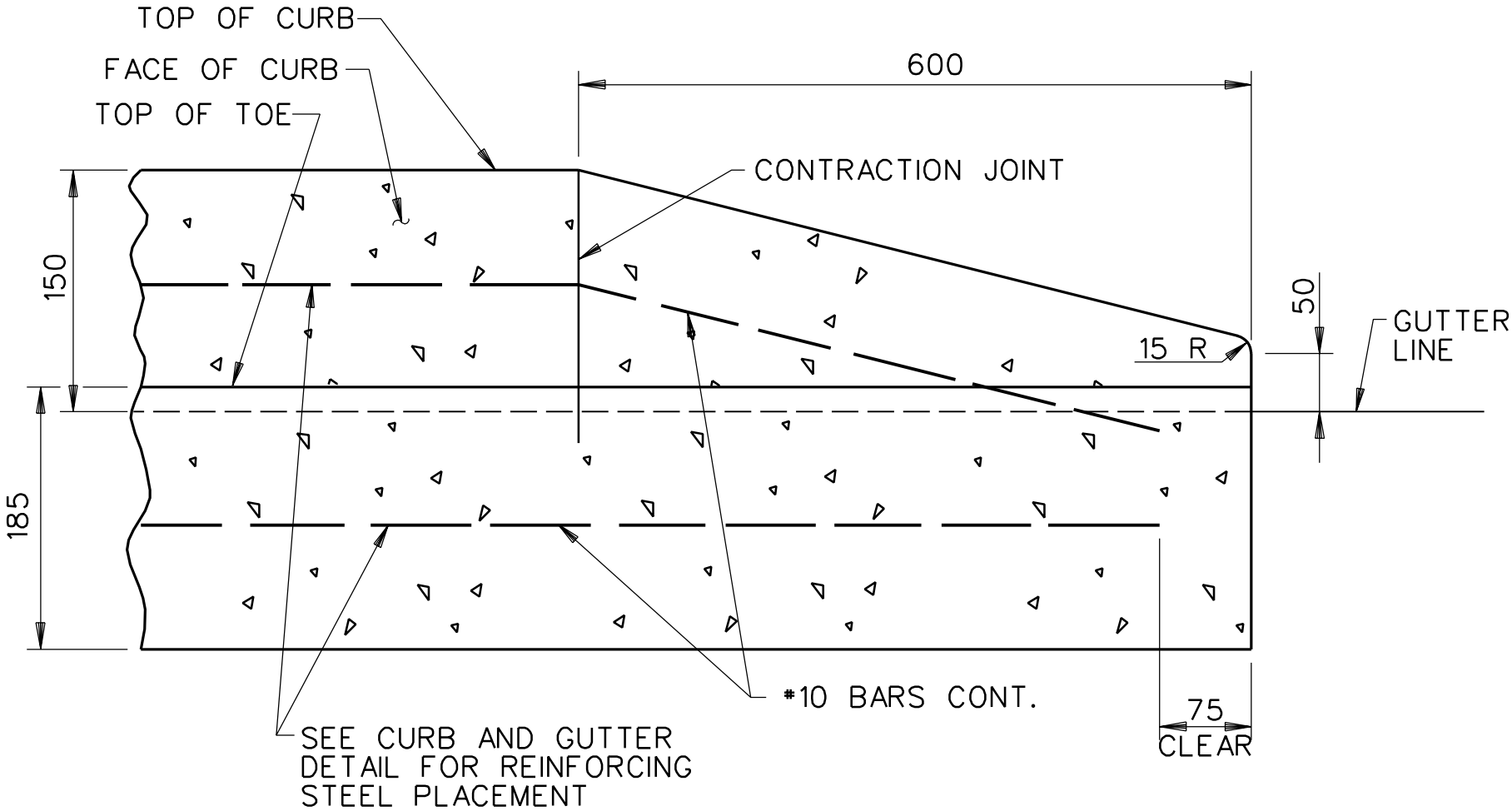

CURB TERMINAL DETAIL

(ELEVATION)
N.T.S.

NOTE TO DESIGNER:

REINFORCING BARS TO BE USED FOR ALL ARMY PROJECTS, ALL PROJECTS IN THE SAN ANTONIO AREA, AND AT SHEPPARD AIR FORCE BASE.

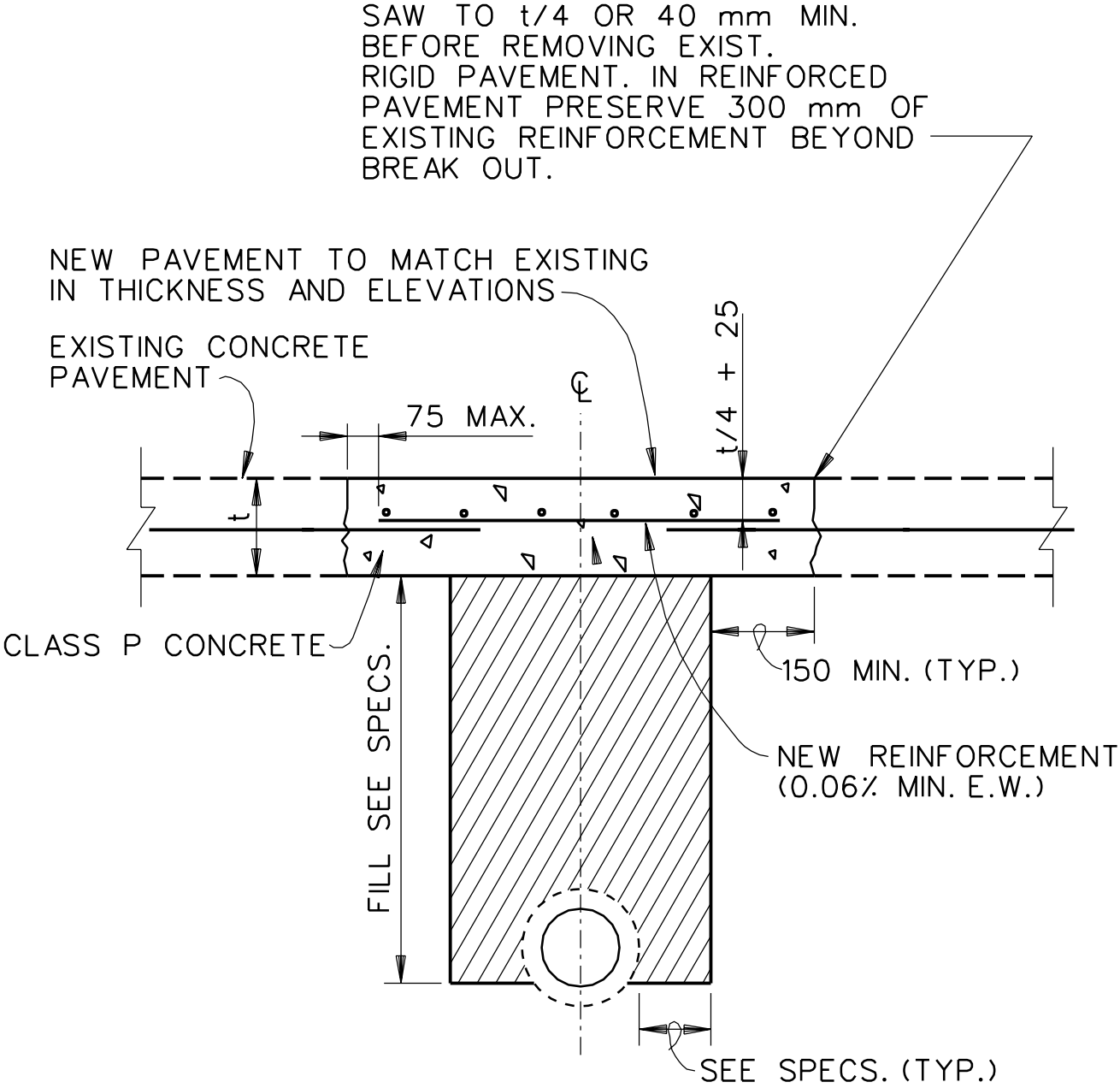

PAVEMENT REPLACEMENT DETAIL

(RIGID PAVEMENT)
N.T.S.

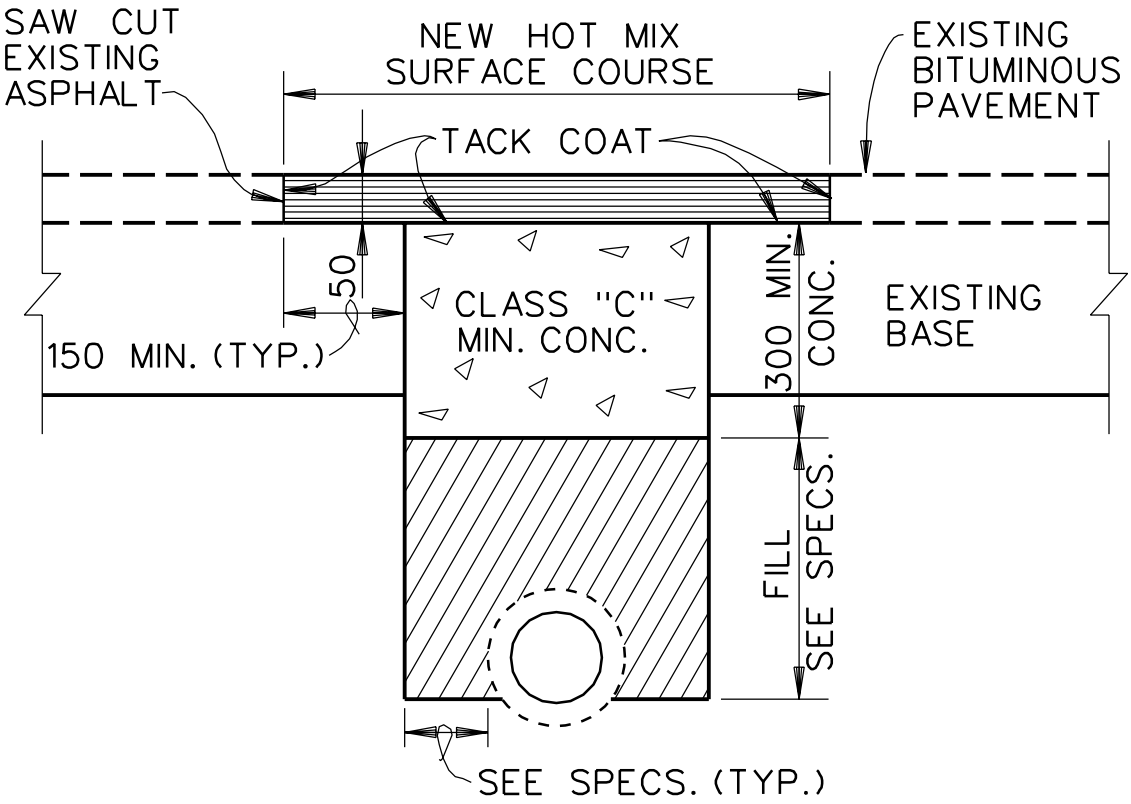

PAVEMENT REPLACEMENT DETAIL

(FLEXIBLE PAVEMENT)
N.T.S.

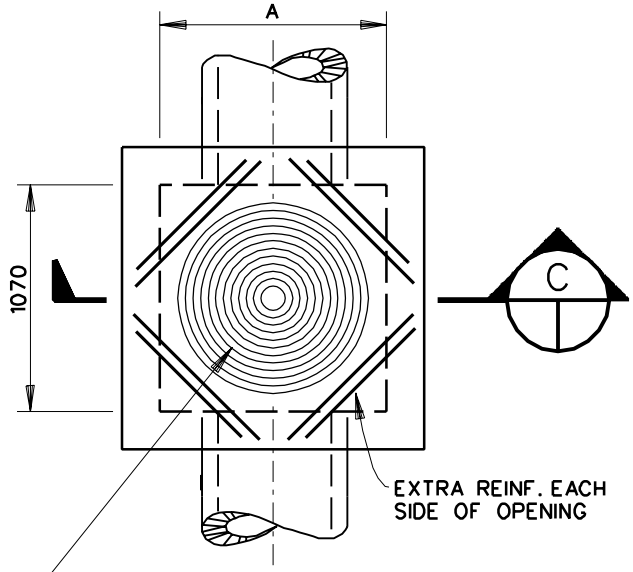

PLAN

CAST IRON MANHOLE FRAME AND COVER,
760 mm (30") DIA. OPENING, 1.8 kN TOTAL WEIGHT (LIGHT DUTY)
760 mm (30") DIA. OPENING, M 18 (H 20) WHEEL LOAD CAPACITY (HEAVY DUTY)
760 mm (30") DIA. OPENING, CAPACITY - UNIFORMLY DISTRIBUTED LOADS
OF 0.69 - 1.55 MPa (EXTRA HEAVY DUTY)

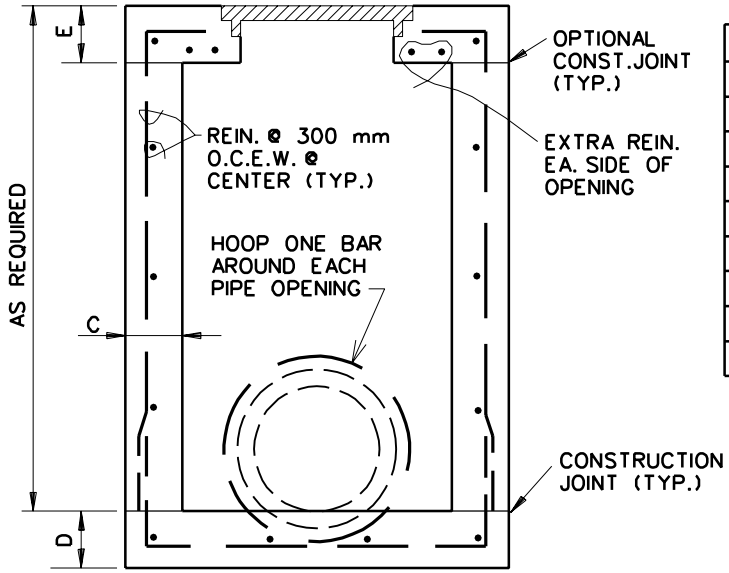

DIMENSION SCHEDULE	
PIPE SIZE	A
≤ 900 (36")	1220
1050 (42")	1370
1200 (48")	1520
1350 (54")	1680
1500 (60")	1830
1650 (66")	2130
1800 (72")	2290
2100 (84")	2590

SECTION C

DIMENSION SCHEDULE	C	D	E
NON-TRAFFIC AREA	150	200	200
UP TO 40 kN WHEEL LOAD	150	250	250
UP TO 110 kN WHEEL LOAD	200	250	300

NOTES:

1. CAST-IN-PLACE CONCRETE TO HAVE A MINIMUM ULTIMATE COMPRESSIVE STRENGTH OF 21 MPa (3000 psi) AT 28 DAYS.
2. HOOP ONE BAR AROUND ALL PIPE OPENINGS.
3. ALL LAPS AND EXTENSIONS OF REIN. TO BE 30 x DIAM. OF BAR.
4. STD. PRE-CAST MANHOLES MAY BE USED INSTEAD WHERE ECONOMICAL.

NOTES TO DESIGNER:

1. MANHOLE COVERS DESIGNATED "LIGHT" ARE FOR AREAS SUBJECT TO RESIDENTIAL TRAFFIC OR LESS.
2. MANHOLE COVERS DESIGNATED "HEAVY" ARE FOR AREAS SUBJECT TO TRAFFIC LOADS GREATER THAN RESIDENTIAL.
3. STEEL LADDER SHALL BE PROVIDED WHEN MANHOLE BECOMES DEEPER THAN 3660 mm BELOW FINISHED GRADE. (SEE SPECS.)
4. REINFORCEMENT BAR SIZE: NON-TRAFFIC •13
   WHEEL LOAD UP TO 40 kN •16
   WHEEL LOAD UP TO 110 kN •19

STORM DRAIN MANHOLE DETAILS

N.T.S.

PLATE C46

CAST IRON MANHOLE FRAME AND COVER ✳
760 mm (30") DIA. OPENING, 1.8 kN TOTAL WEIGHT (LIGHT DUTY)
760 mm (30") DIA. OPENING, M18 (H20) WHEEL LOAD CAPACITY (HEAVY DUTY)
760 mm (30") DIA. OPENING, CAPACITY - UNIFORMLY DISTRIBUTED LOADS OF 0.69 - 1.55 MPa (EXTRA HEAVY DUTY)

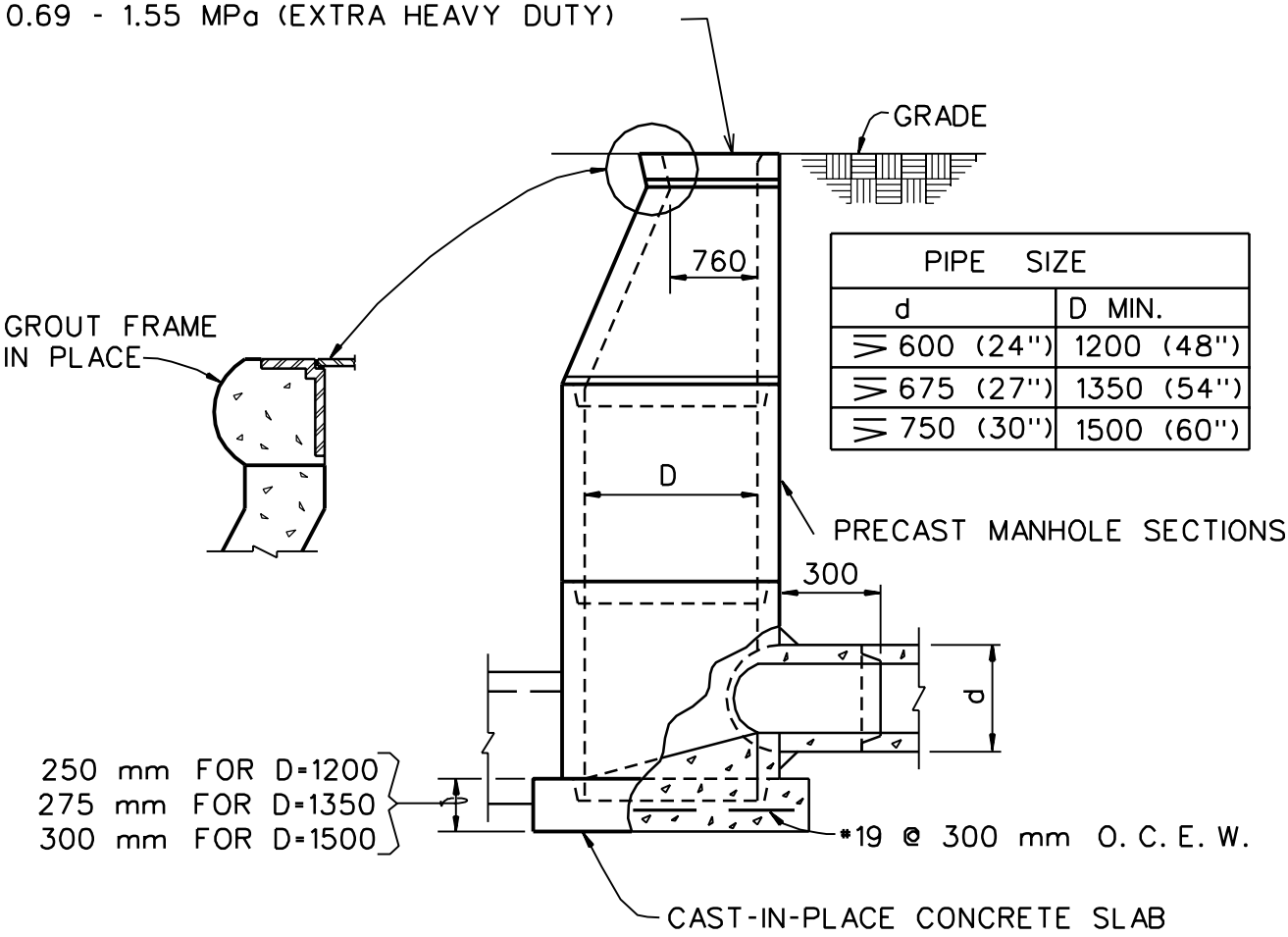

PIPE SIZE	
d	D MIN.
≥ 600 (24")	1200 (48")
≥ 675 (27")	1350 (54")
≥ 750 (30")	1500 (60")

PRECAST STORM DRAIN MANHOLE

N.T.S.

NOTE TO DESIGNER:

MONOLITHIC CONSTRUCTION OR FABRICATE AS DESCRIBED: WELD REINFORCING IN MAIN LINE PIPE TO THE MANHOLE CONNECTION, APPLY A RICH CEMENT MORTAR COATING.

✳ DESIGNER SHALL SELECT THE APPROPRIATE MANHOLE FRAME AND COVER.

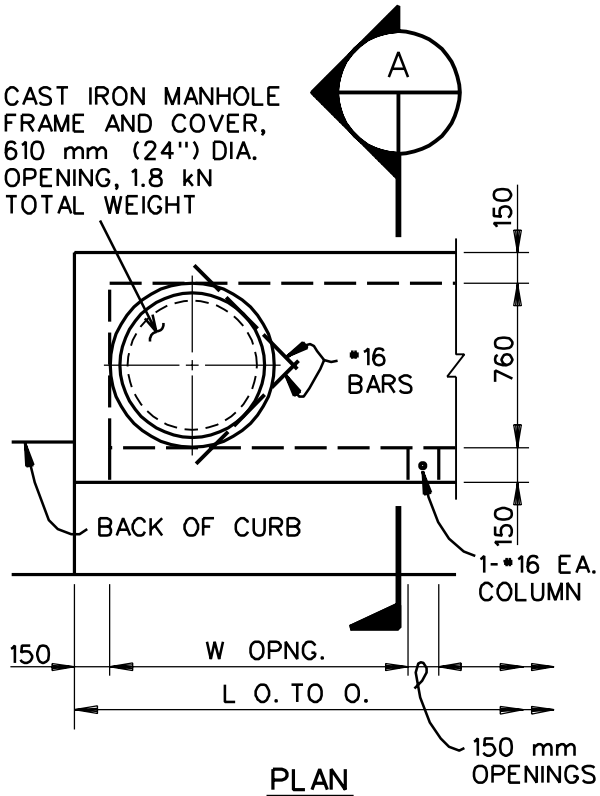

PLAN

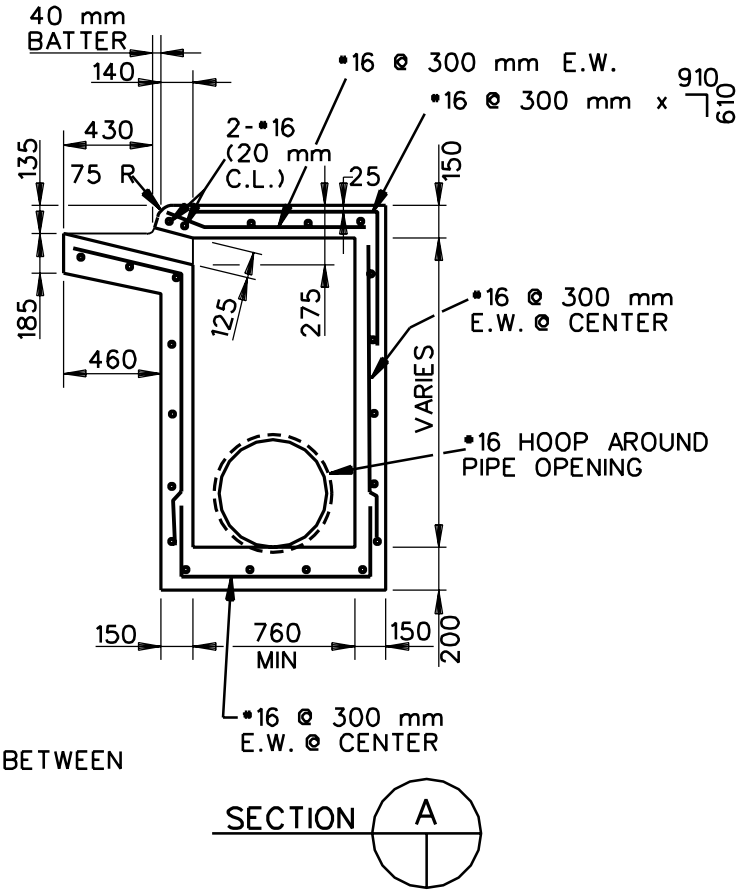

SECTION

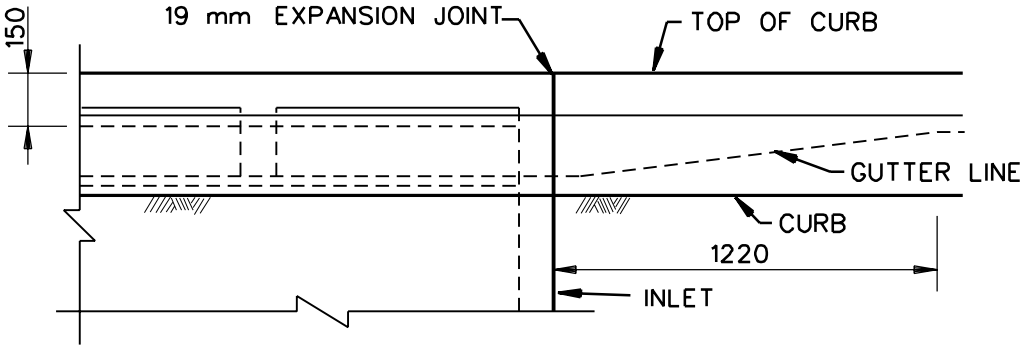

PART FRONT ELEVATION

TYPE	NO. OPNG	W	L
A	1	1220	1520
B	2	990	2440
C	3	810	3030
D	3	1020	3660

STANDARD CURB INLET DETAILS

(LIGHT DUTY)
N.T.S.

PLATE C48

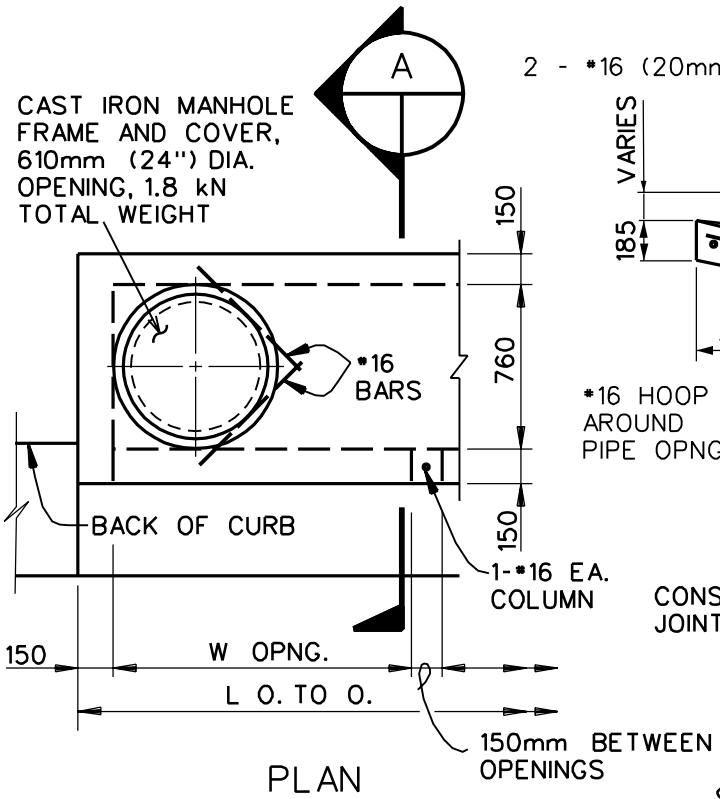

PLAN

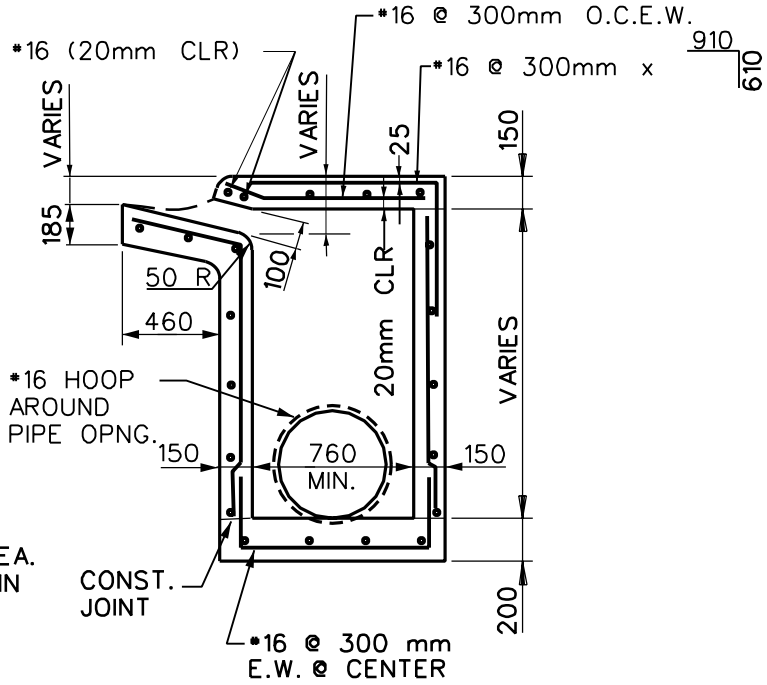

SECTION (TYP.) A

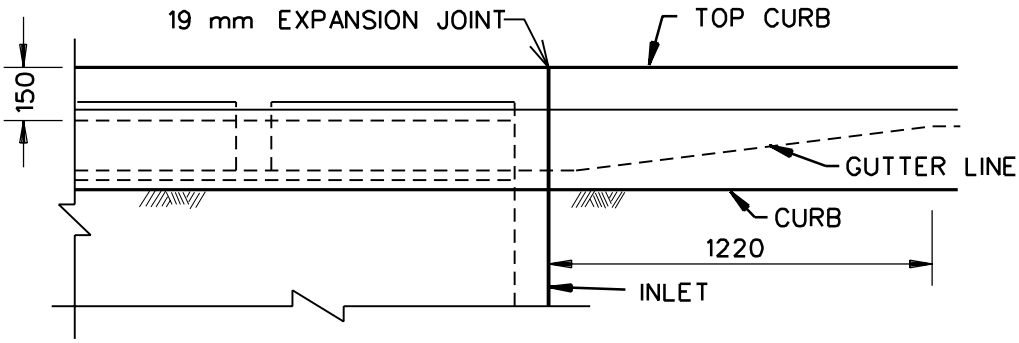

PART FRONT ELEVATION

TYPE	NO. OPNG	W	L
A	1	1220	1520
B	2	990	2440
C	3	810	3030
D	3	1020	3660

NOTE TO DESIGNER:

1. ADD DIMENSIONS AS NEEDED IN SECTION A-A TO CLARIFY FORMING INLET FOR THE APPLICABLE SIZE. (SEE MOUNTABLE CURB AND GUTTER DETAILS)

MOUNTABLE CURB INLET DETAILS

(LIGHT DUTY)
N.T.S.

PLATE C49

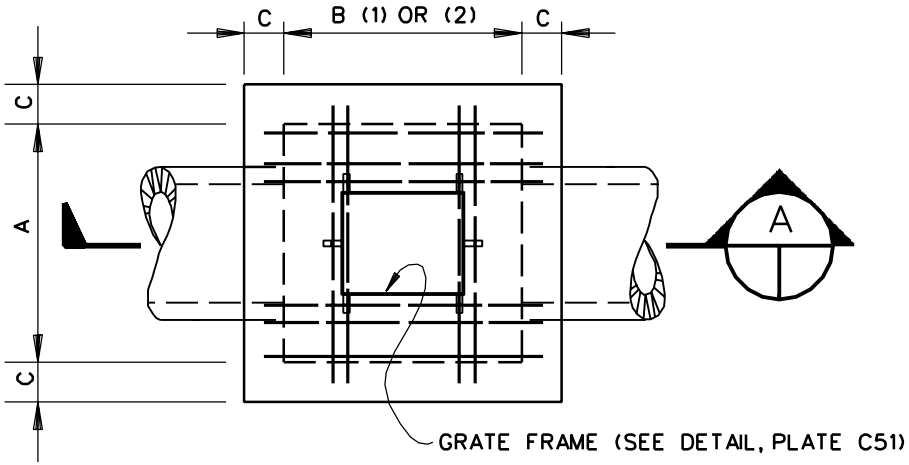

PLAN

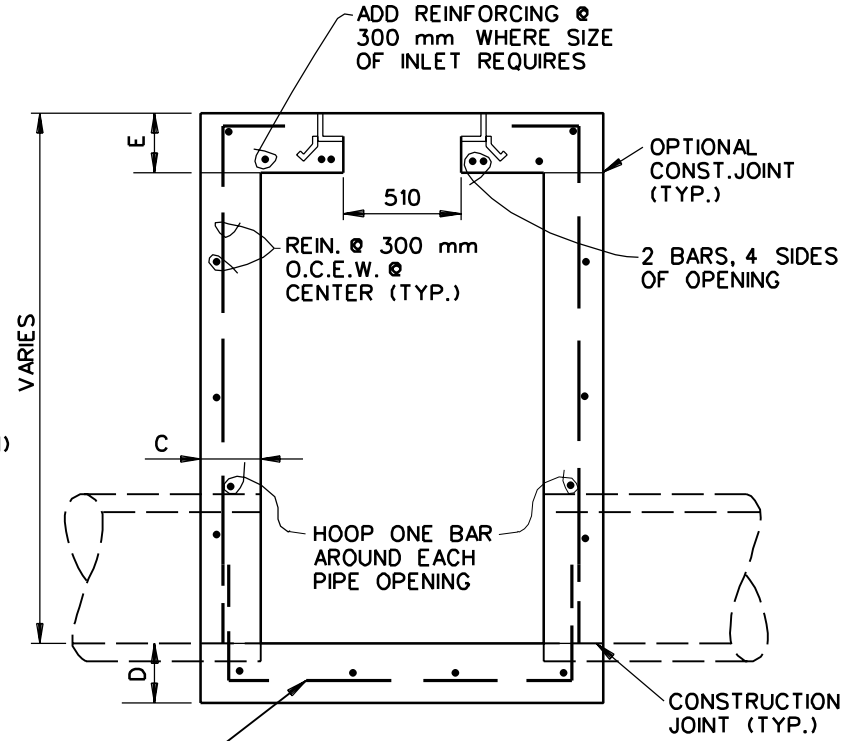

SECTION A

DIMENSION SCHEDULE			
PIPE SIZE	A	NUMBER OF GRATES	B
900 (36") OR LESS	1220	1	1220
1050 (42")	1370		
1200 (48")	1520	2	1830
1350 (54")	1680		
1500 (60")	1830		
1650 (66")	2130	3	2440
1800 (72")	2290		
2100 (84")	2590		

NOTES:

1. USE 21 MPa (3000 psi) CONCRETE.
2. ALL LAPS AND EXTENSIONS OF REINF. TO BE 30x DIAM. OF BAR.
3. STD. PRE-CAST SURFACE INLETS MAY BE USED INSTEAD WHERE ECONOMICAL.

DIMENSION SCHEDULE	C	D	E
NON-TRAFFIC AREA	150	200	200
UP TO 40 kN WHEEL LOAD	150	250	250
UP TO 110 kN WHEEL LOAD	200	250	300

NOTES TO DESIGNER:

1. WHERE PIPE IS REQUIRED FOR A "T" OR 4-WAY INTERSECTION, USE DIMENSION "A" UNDER DIMENSION SCHEDULE.
2. USE THE LARGER APPLICABLE DIMENSION OF "A" OR "B".
3. REINFORCEMENT BAR SIZE: NON-TRAFFIC #13
   WHEEL LOADS UP TO 40 kN #16
   WHEEL LOADS UP TO 110 kN #19

STANDARD SURFACE INLET

N.T.S.

PLATE C50

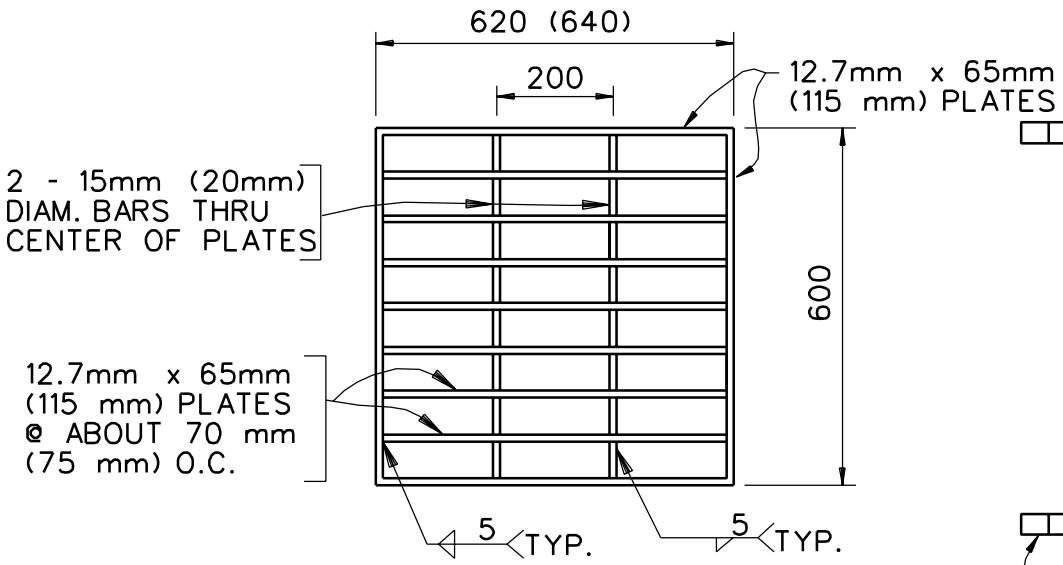

GRATE PLAN

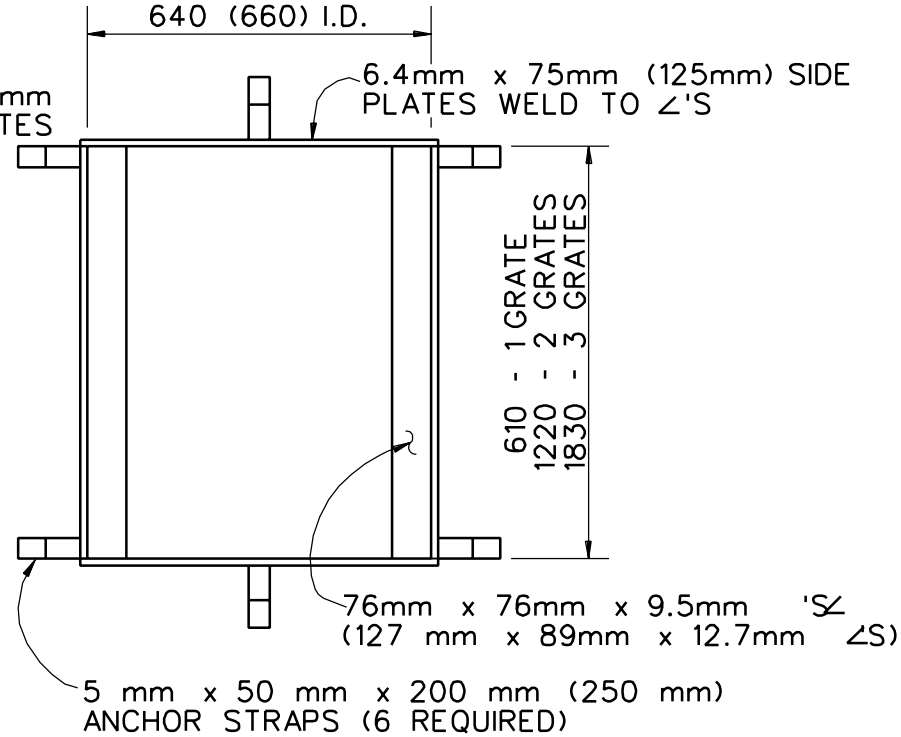

FRAME PLAN

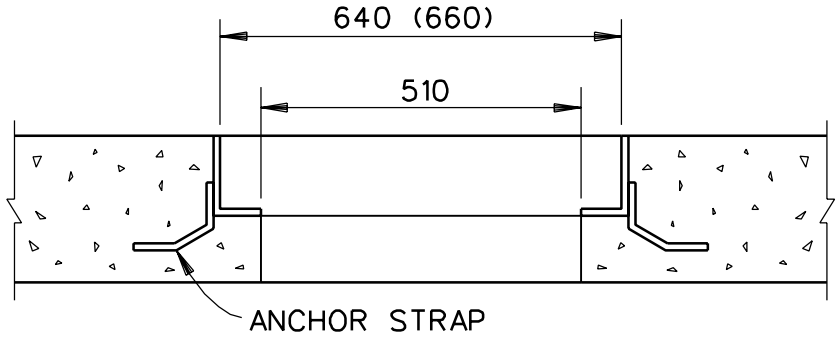

SECTION THRU INSTALLED FRAME

NOTES TO DESIGNER:

1. ALL DIMENSIONS APPLY TO NON-TRAFFIC, 4000kg, AND 11 300kg LOADING EXCEPT AS NOTED BY PARENTHESES.
2. DIMENSIONS IN PARENTHESES APPLY TO 110 kN LOADING ONLY.

SURFACE INLET GRATE AND FRAME

N.T.S.

PLATE C51

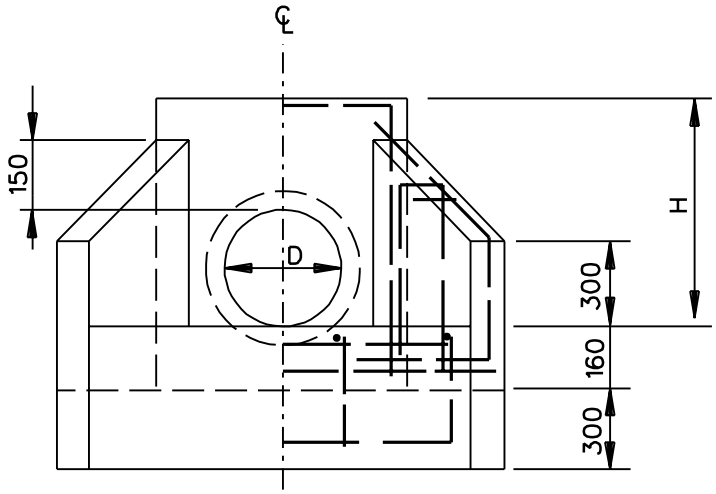

ELEVATION

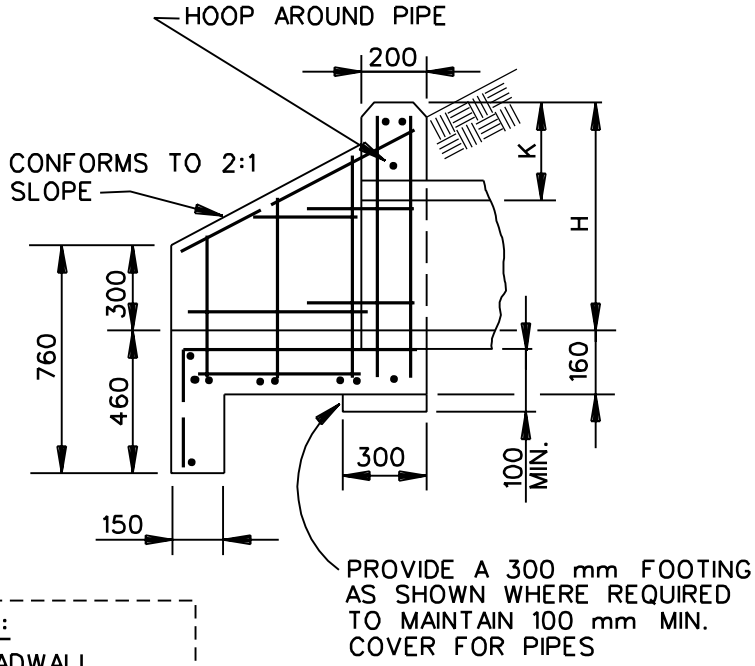

NOTE TO DESIGNER:

SEE CONCRETE HEADWALL TABLE OF DIMENSIONS FOR DIMENSIONS AND REINFORCEMENT ON PLATES NO. C54 AND C55.

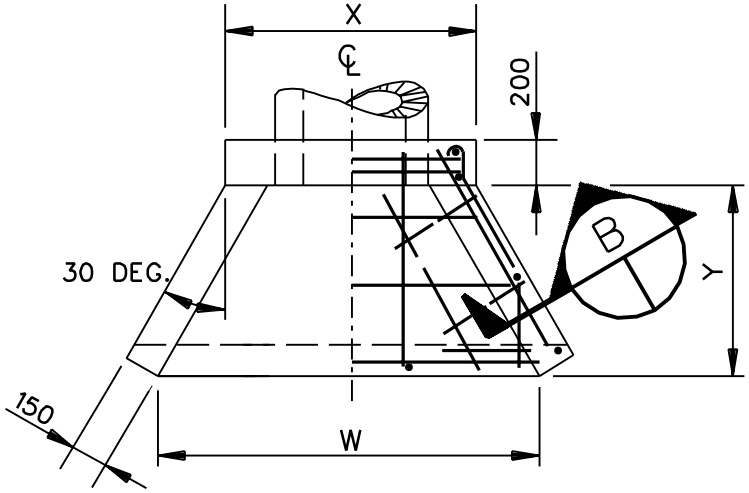

PLAN

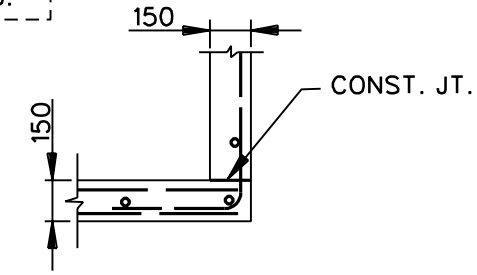

SECTION B

TYPE A CONCRETE HEADWALL

SINGLE PIPE - 90 DEG.
N.T.S.

NOTE TO DESIGNER
SEE PLATES C 54 AND C55 FOR DIMENSIONS AND REINFORCEMENT

PLATE C52

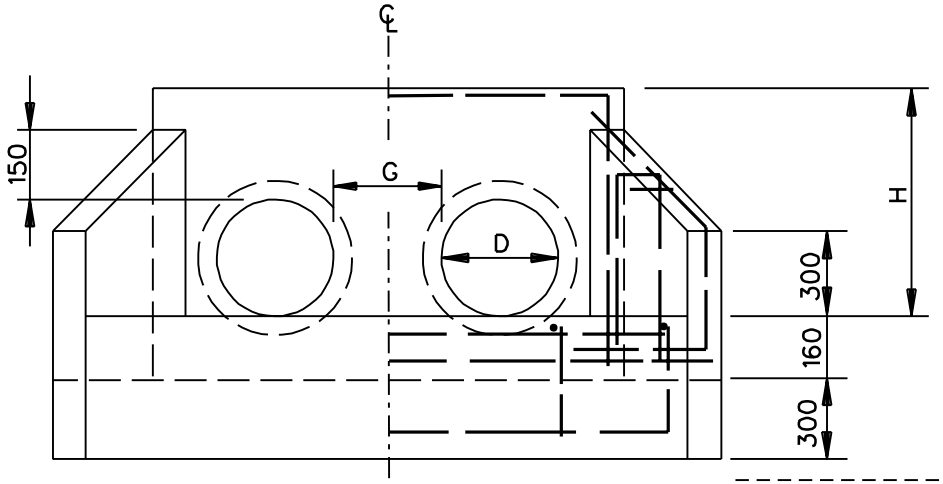

ELEVATION

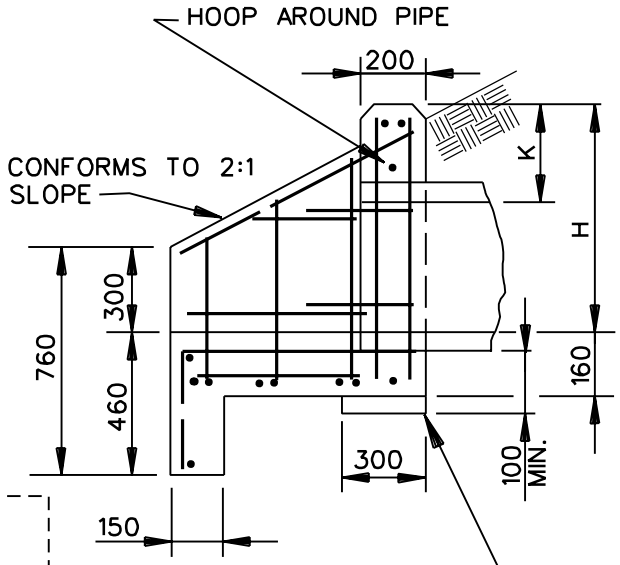

NOTE TO DESIGNER:
SEE CONCRETE HEADWALL TABLE OF DIMENSIONS FOR DIMENSIONS AND REINFORCEMENT ON ON PLATES NO. C54 AND C55.

PROVIDE A 300 mm FOOTING AS SHOWN WHERE REQUIRED TO MAINTAIN 100 mm MIN. COVER FOR PIPES

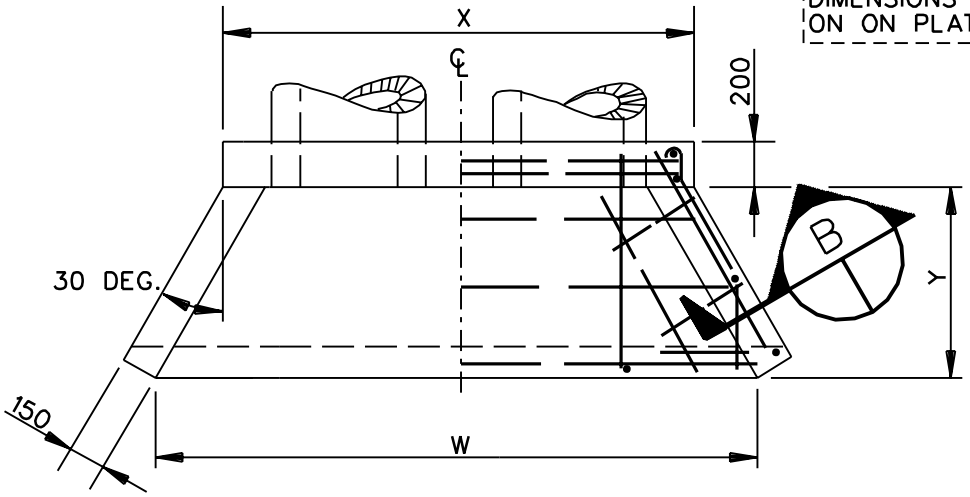

PLAN

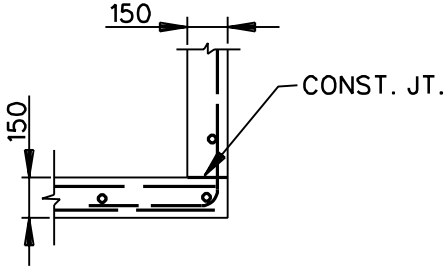

SECTION

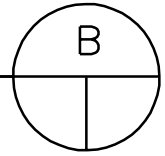

TYPE B CONCRETE HEADWALL

MULTIPLE PIPE - 90 DEG.
N.T.S.

NOTE TO DESIGNER
SEE PLATES C 54 AND C55 FOR DIMENSIONS AND REINFORCEMENT

PLATE C53

NO. OF PIPES	DIAM. OF PIPES	TABLE OF DIMENSIONS TYPE "A" AND "B"						
		G	K	X	H	Y	W	BAR SIZE *
1	300(12")	--	300	710	610	300	710	#10
2	"	250	"	1270	"	"	1270	"
3	"	"	"	1830	"	"	1830	"
4	"	"	"	2390	"	"	2390	"
1	380(15")	--	300	800	690	460	980	#10
2	"	300	"	1490	"	"	1660	"
3	"	"	"	2170	"	"	2350	"
4	"	"	"	2860	"	"	3040	"
1	450(18")	--	300	890	760	610	1240	#10
2	"	360	"	1700	"	"	2050	"
3	"	"	"	2510	"	"	2870	"
4	"	"	"	3330	"	"	3680	"
1	600(24")	--	300	1070	910	910	1770	#10
2	"	430	"	2110	"	"	2810	"
3	"	"	"	3150	"	"	3850	"
4	"	"	"	4190	"	"	4900	"
1	750(30")	--	300	1240	1070	1220	2300	#10
2	"	510	"	2510	"	"	3570	"
3	"	"	"	3780	"	"	4840	"
4	"	"		5050	"	"	6110	"
1	900(36")	--	300	1420	1220	1520	2830	#13
2	"	580	"	2920	"	"	4330	"
3	"	"	"	4420	"	"	5830	"
4	"	"	"	5920	"	"	7330	"

CONCRETE HEADWALL

FOR CONCRETE PIPE - 90° - SINGLE AND MULTIPLE PIPES

* - REINFORCING BARS AT 300 mm O.C.E.W.

PLATE C54

NO. OF PIPES	DIAM. OF PIPES	TABLE OF DIMENSIONS TYPE "A" AND "B"						
		G	K	X	H	Y	W	BAR SIZE *
1	1050(42")	--	300	1600	1370	1830	3360	#13
2	"	660	"	3330	"	"	5090	"
3	"	"	"	5050	"	"	6810	"
4	"	"	"	6780	"	"	8540	"
1	1200(48")	--	380	1780	1600	2130	3890	#13
2	"	740	"	3730	"	"	5850	"
3	"	"	"	5690	"	"	7800	"
4	"	"	"	7650	"	"	9760	"
1	1350(54")	--	380	1960	1750	2440	4420	#13
2	"	610	"	4190	"	"	6650	"
3	"	"	"	6430	"	"	8890	"
4	"	"	"	8660	"	"	11 130	"
1	1500(60")	--	380	2130	1910	2740	4950	#13
2	"	910	"	4570	"	"	7390	"
3	"	"	"	7010	"	"	9830	"
4	"	"	"	9450	"	"	12 270	"
1	1650(66")	--	380	2310	2060	3050	5480	#16
2	"	940	"	4930	"	"	8100	"
3	"	"	"	7540	"	"	10 710	"
4	"	"	"	10 160	"	"	13 330	"
1	1800(72")	--	380	2490	2210	3350	6010	#16
2	"	970	"	5280	"	"	8800	"
3	"	"	"	8080	"	"	11 600	"
4	"	"	"	10 870	"	"	14 390	"

CONCRETE HEADWALL

FOR CONCRETE PIPE - 90° - SINGLE AND MULTIPLE PIPES

* - REINFORCING BARS AT 300 mm O.C.E.W.

PLATE C55

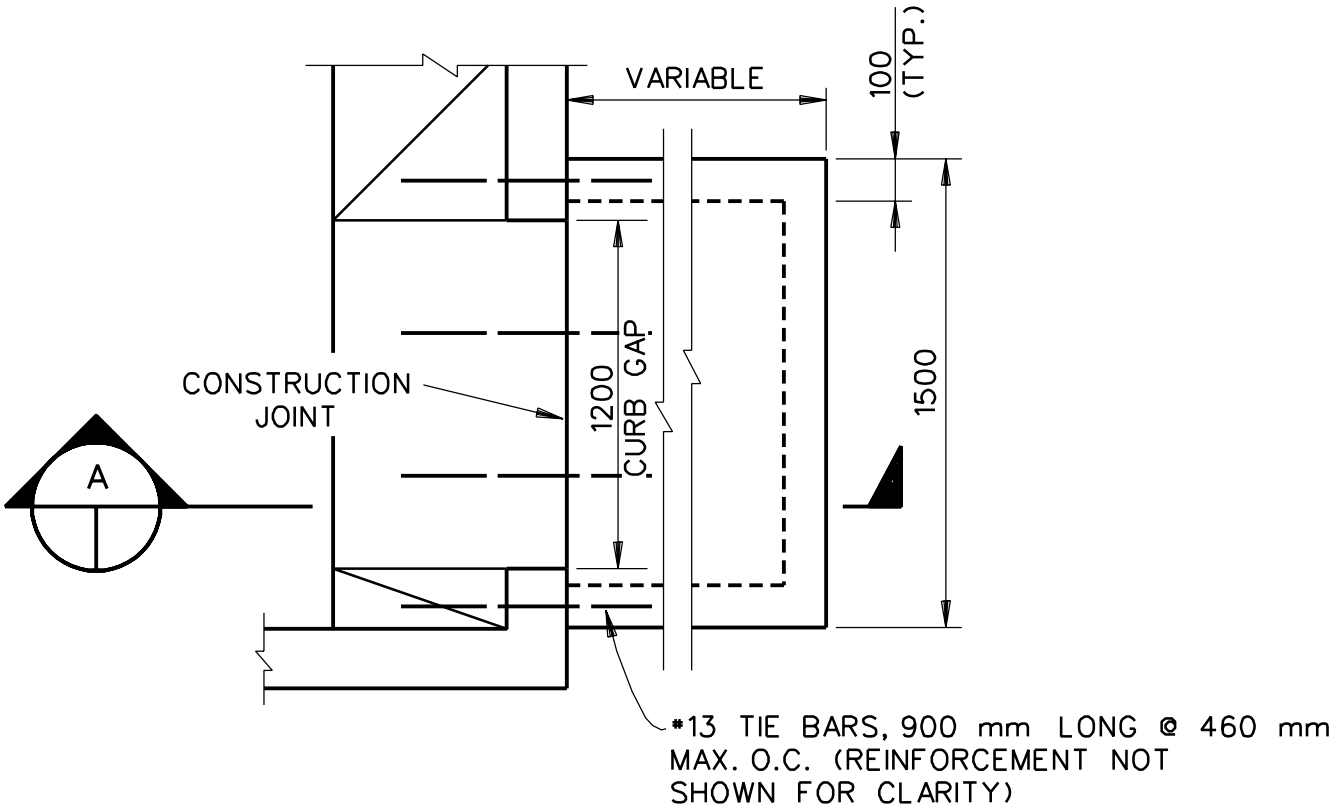

PLAN

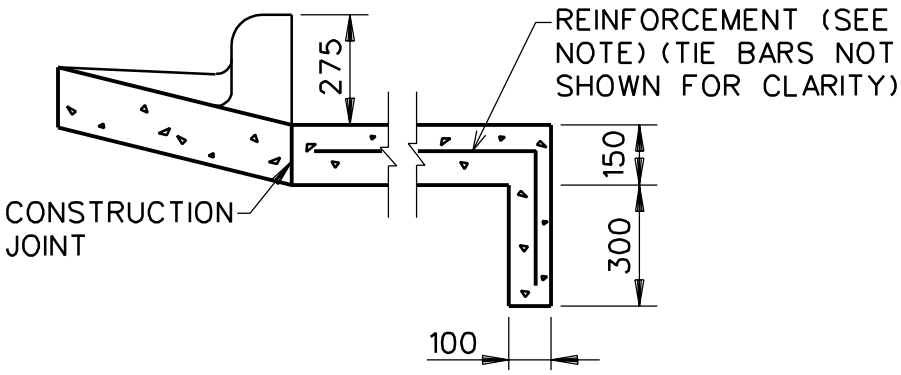

SECTION A

CURB GAP WITH PAD

N.T.S.

NOTE TO DESIGNER:

REINFORCEMENT TO BE 0.20% TIMES THE CROSS SECTIONAL AREA, EACH WAY.

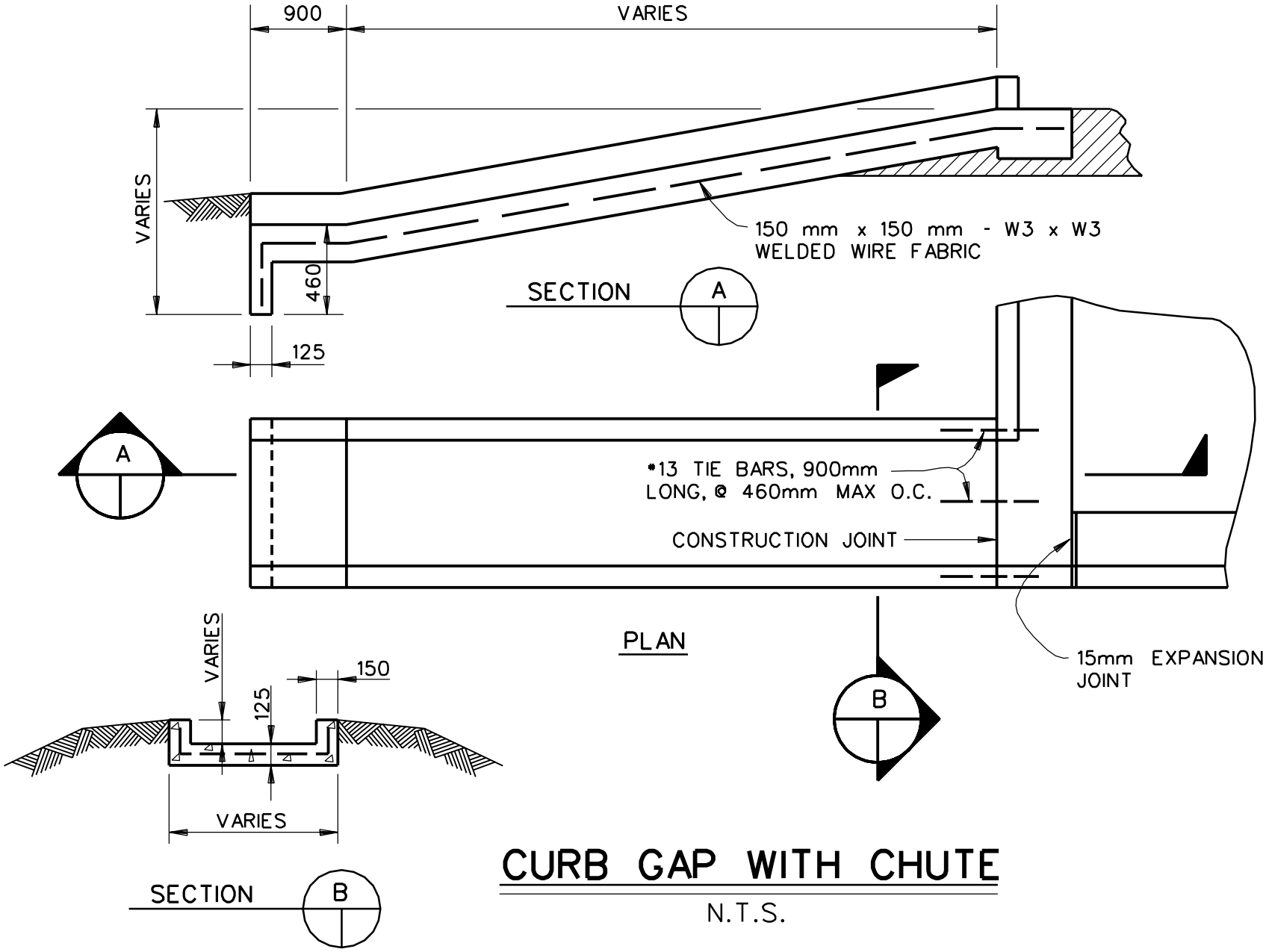

CURB GAP WITH CHUTE

N.T.S.

PLATE C57

SANITARY MANHOLE NOTES:

1. CAST-IN-PLACE CONCRETE TO HAVE MINIMUM ULTIMATE COMPRESSIVE STRENGTH OF 28 MPa AT 28 DAYS.
2. ALL LAPS AND EXTENSIONS OF REINFORCING BARS SHALL BE 30 x DIAM. OF BARS MIN. EXCEPT AS OTHERWISE NOTED.

NOTES TO DESIGNER:

1. MANHOLE COVERS DESIGNATED "LIGHT" ARE FOR AREAS SUBJECT TO RESIDENTIAL TRAFFIC OR LESS.
2. MANHOLE COVERS DESIGNATED "HEAVY" ARE FOR AREAS SUBJECT TO TRAFFIC LOADS GREATER THAN RESIDENTIAL.
3. STEEL LADDER SHALL BE PROVIDED WHEN MANHOLE BECOMES DEEPER THAN 3600 mm BELOW FINISHED GRADE. (SEE SPECS.)
4. GROUT WILL BE PLACED IN SANITARY SEWER MANHOLES AS INDICATED ON THIS DRAWING. NOT REQUIRED IN STORM SEWER MANHOLES.
5. DETAILS FOR CAST-IN-PLACE OPTION AND BOTH PRECAST OPTIONS WILL BE INCLUDED IN ALL PROJECTS.
6. DETAILS OF DROP-TYPE CONNECTION MANHOLE WILL BE INCLUDED AS APPLICABLE.
7. THE "NOTES FOR MANHOLE" ABOVE SHALL APPEAR WITH THE MANHOLE DETAILS ON ALL PROJECTS.

SANITARY MANHOLE NOTES

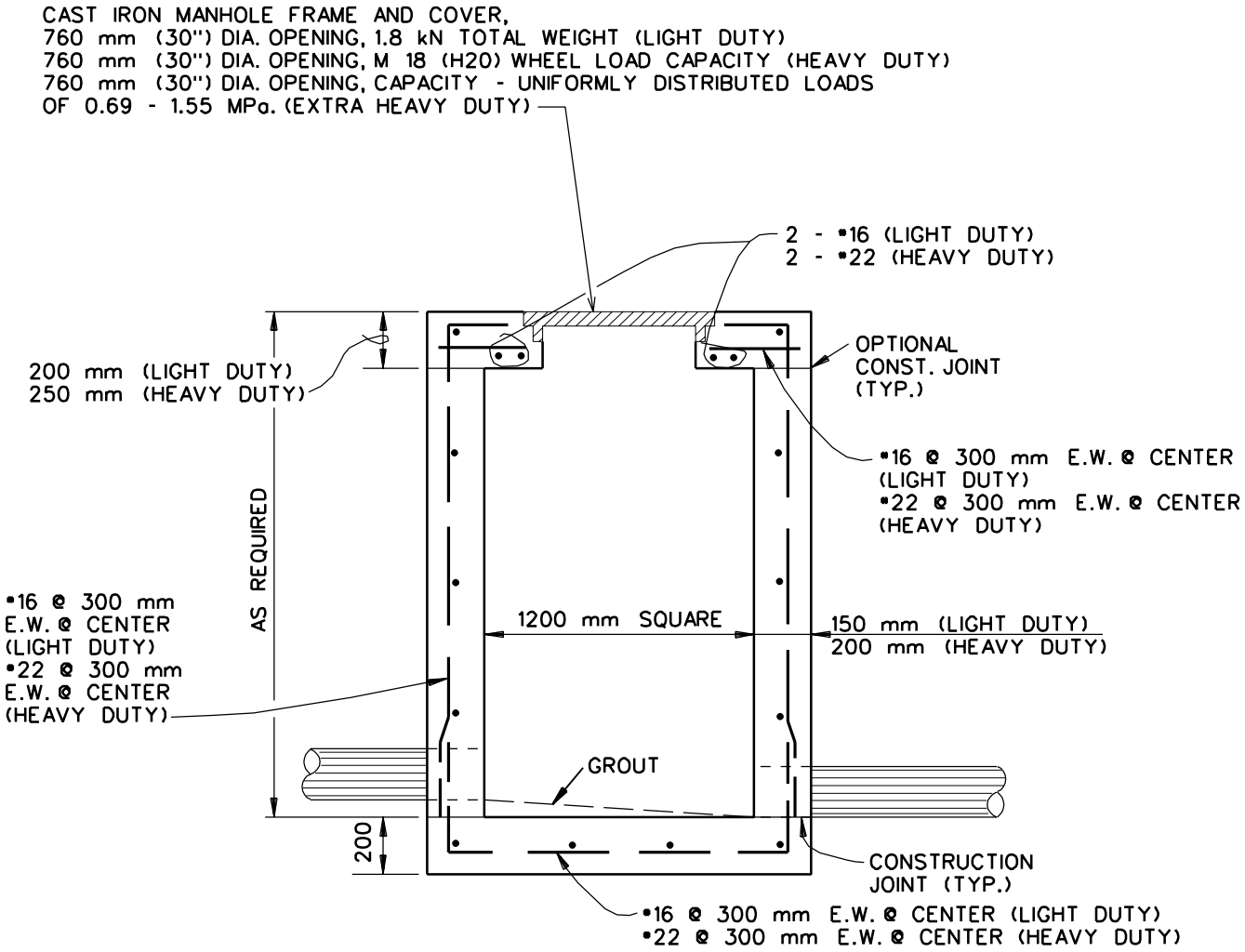

SECTION

CAST-IN-PLACE REINF. CONCRETE OPTION

SANITARY SEWER MANHOLE DETAILS

N.T.S.

NOTE TO DESIGNER:

SLECT APPROPRIATE STRENGTH FOR MANHOLE COVER AND CONCRETE WALL THICHNESS AND REINFORCEMENT SIZE.

PLATE C59

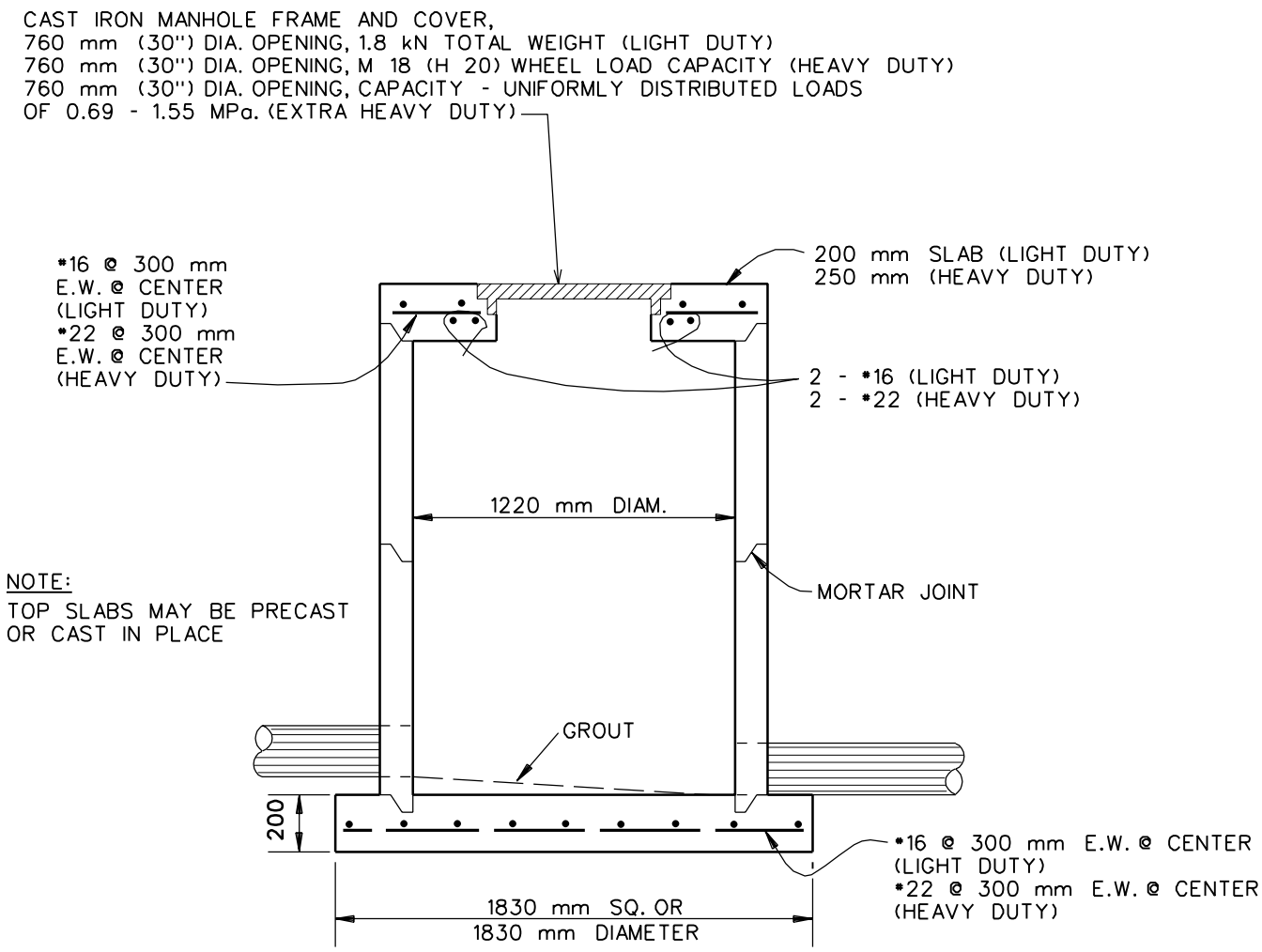

NOTE:

TOP SLABS MAY BE PRECAST OR CAST IN PLACE

SECTION

PRECAST CONCRETE OPTION

SANITARY SEWER MANHOLE DETAILS

N.T.S.

NOTE TO DESIGNER:

SELECT APPROPRIATE STRENGTH FOR MANHOLE COVER AND CONCRETE WALL THICKNESS AND REINFORCEMENT SIZE.

PLATE C60

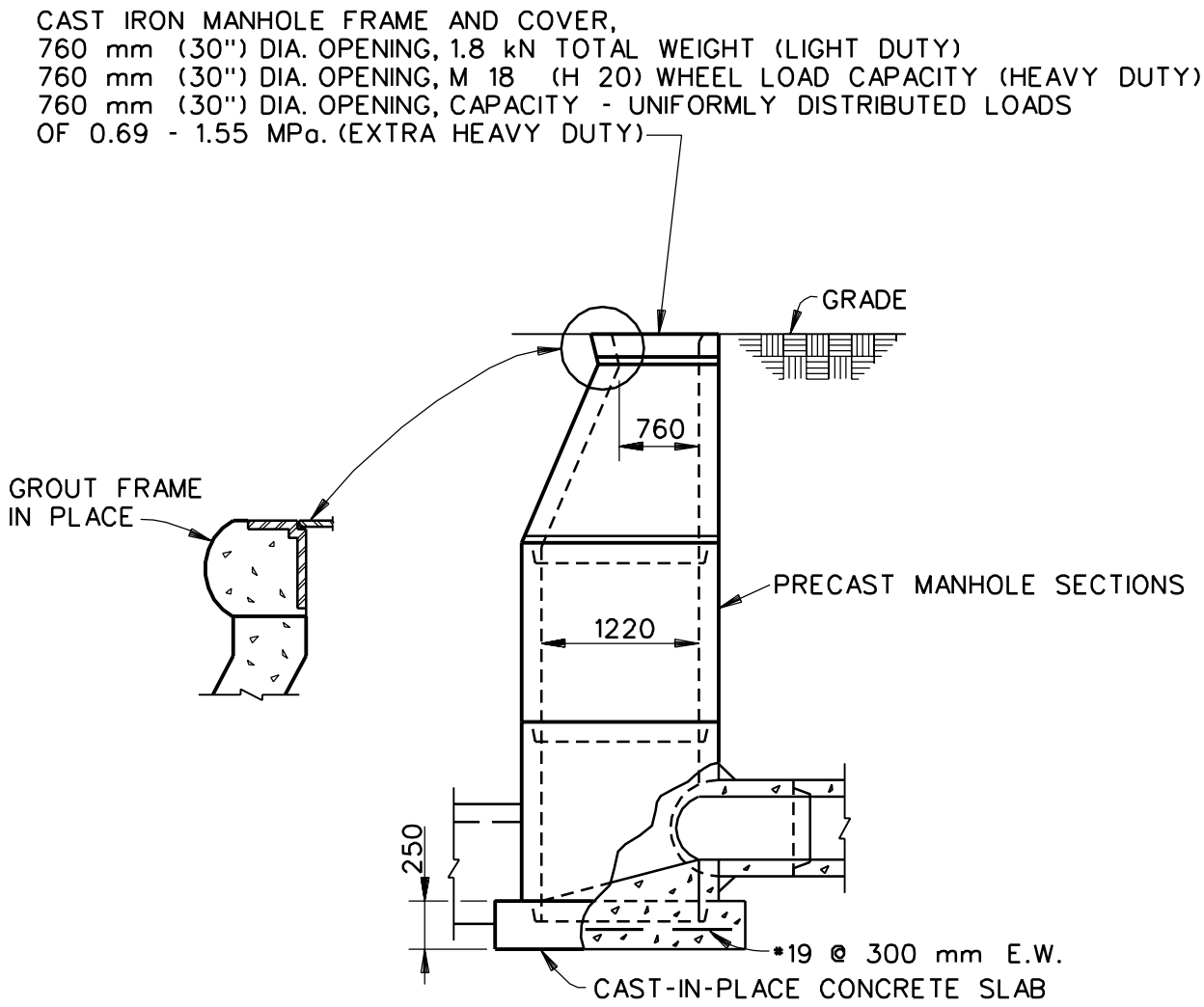

ALTERNATE PRECAST MANHOLE OPTION

SANITARY SEWER MANHOLE DETAILS

N.T.S.

PLATE C61

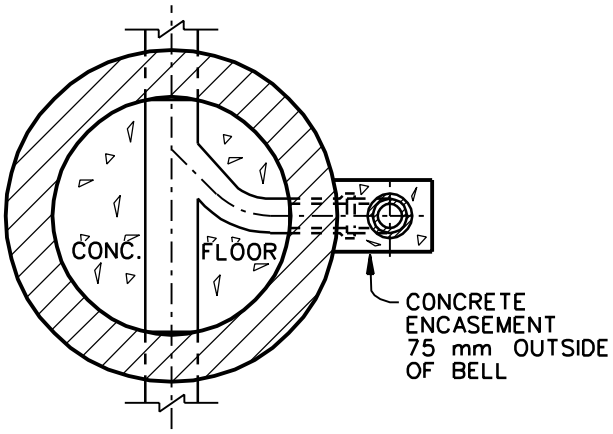

SECTION

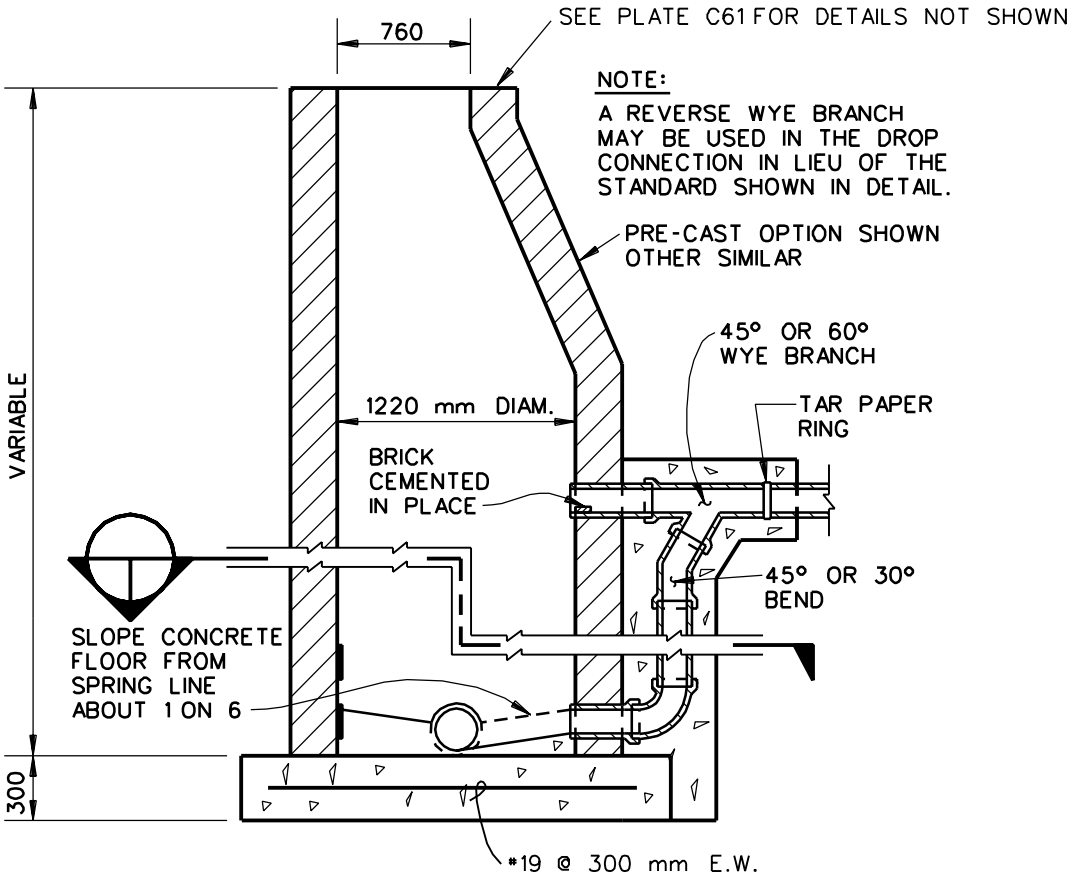

TYPICAL SECTION - DROP TYPE SEWER CONNECTION

N.T.S.

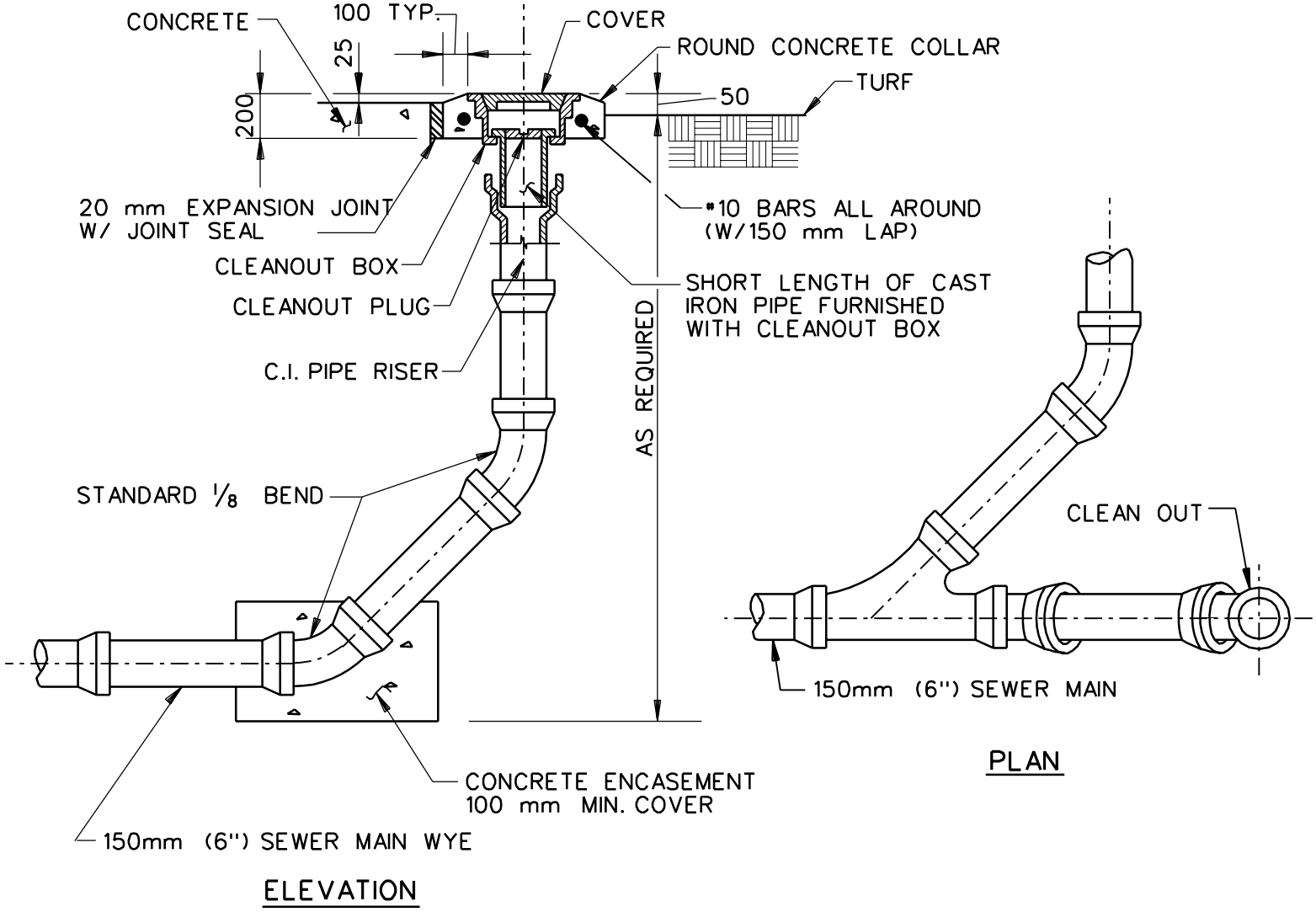

TYPICAL CLEANOUT

N.T.S.

PLATE C63

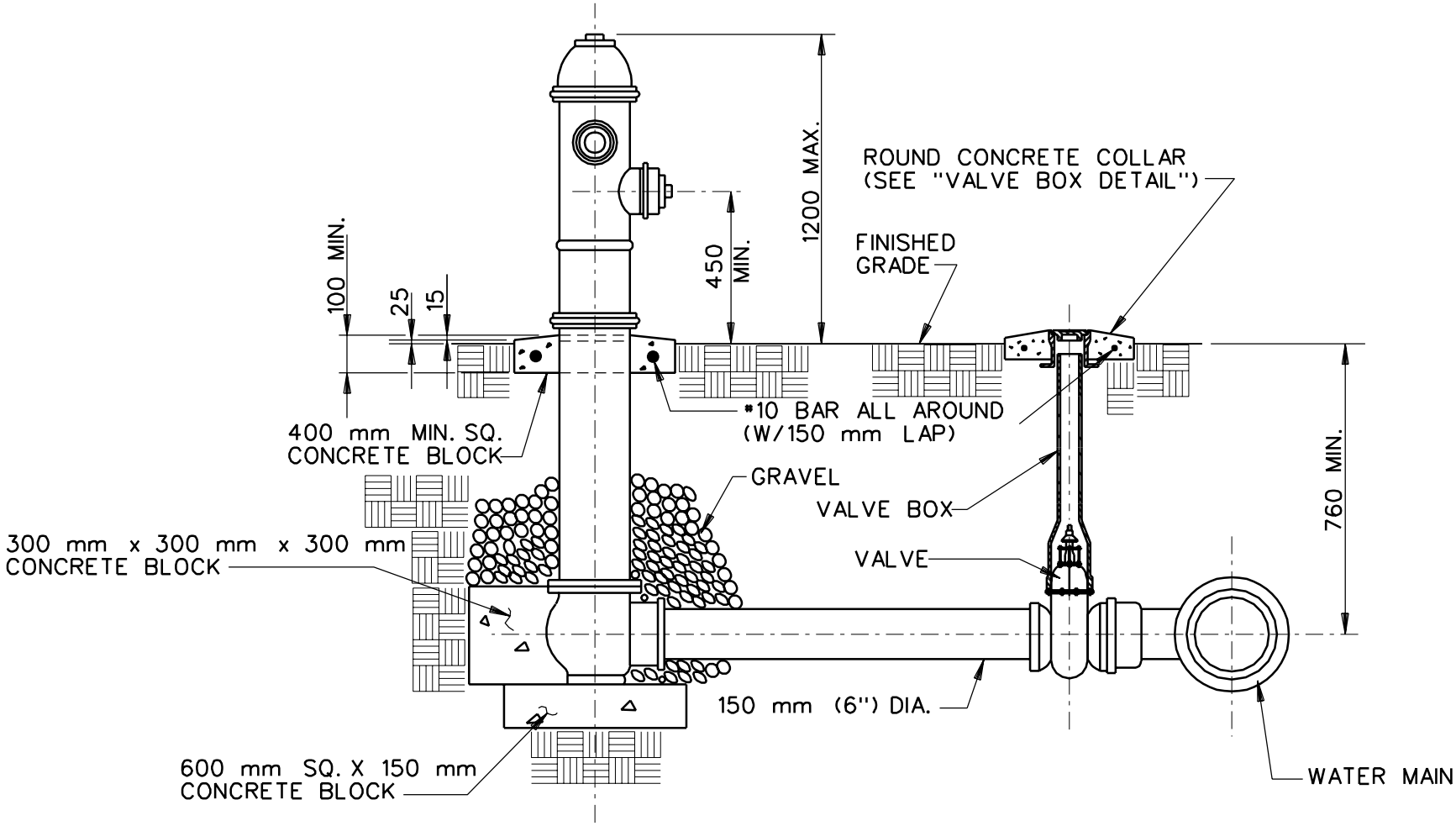

TYPICAL FIRE HYDRANT SETTING

N.T.S.

PLATE C64

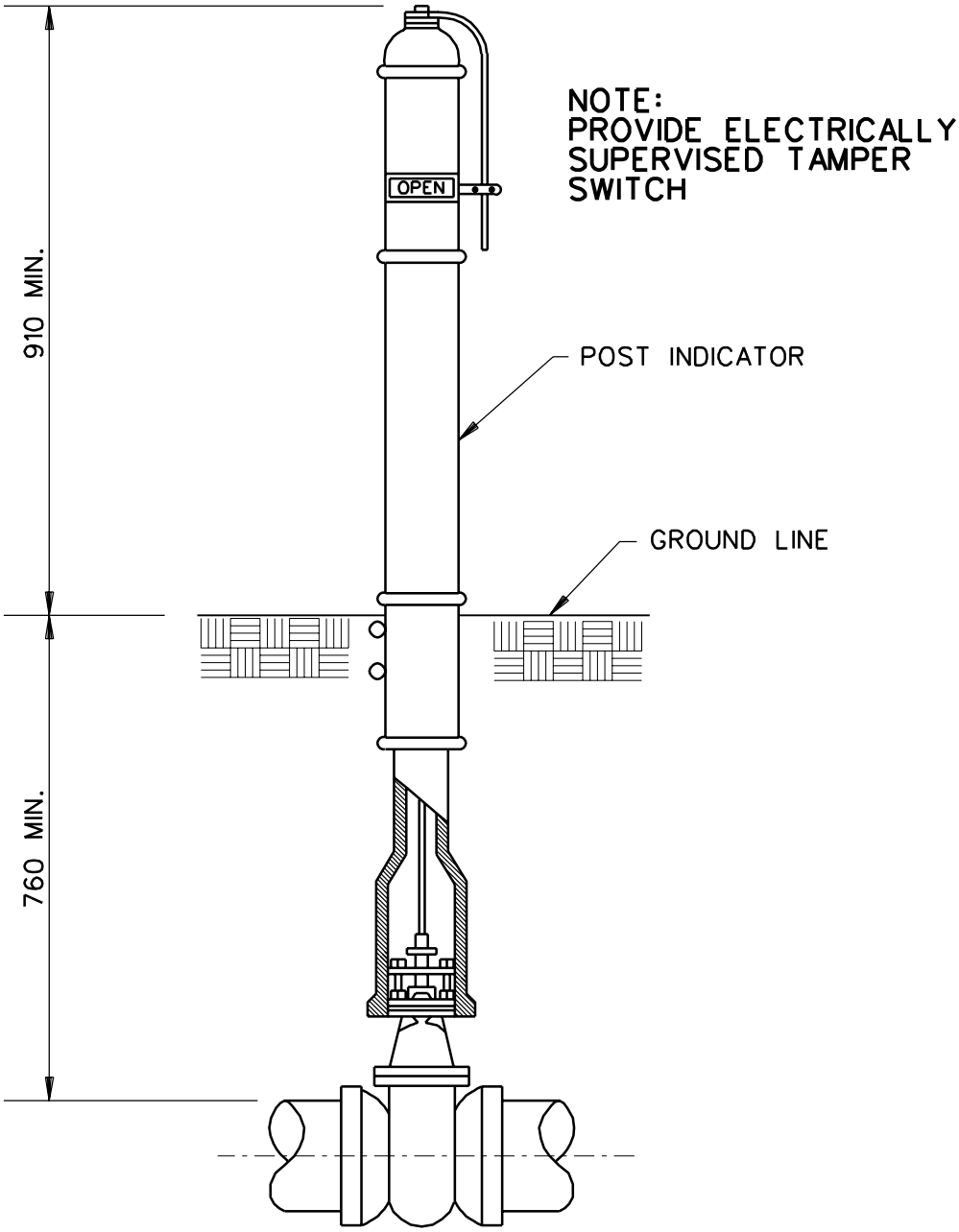

POST INDICATOR VALVE DETAIL

N.T.S.

PLATE C65

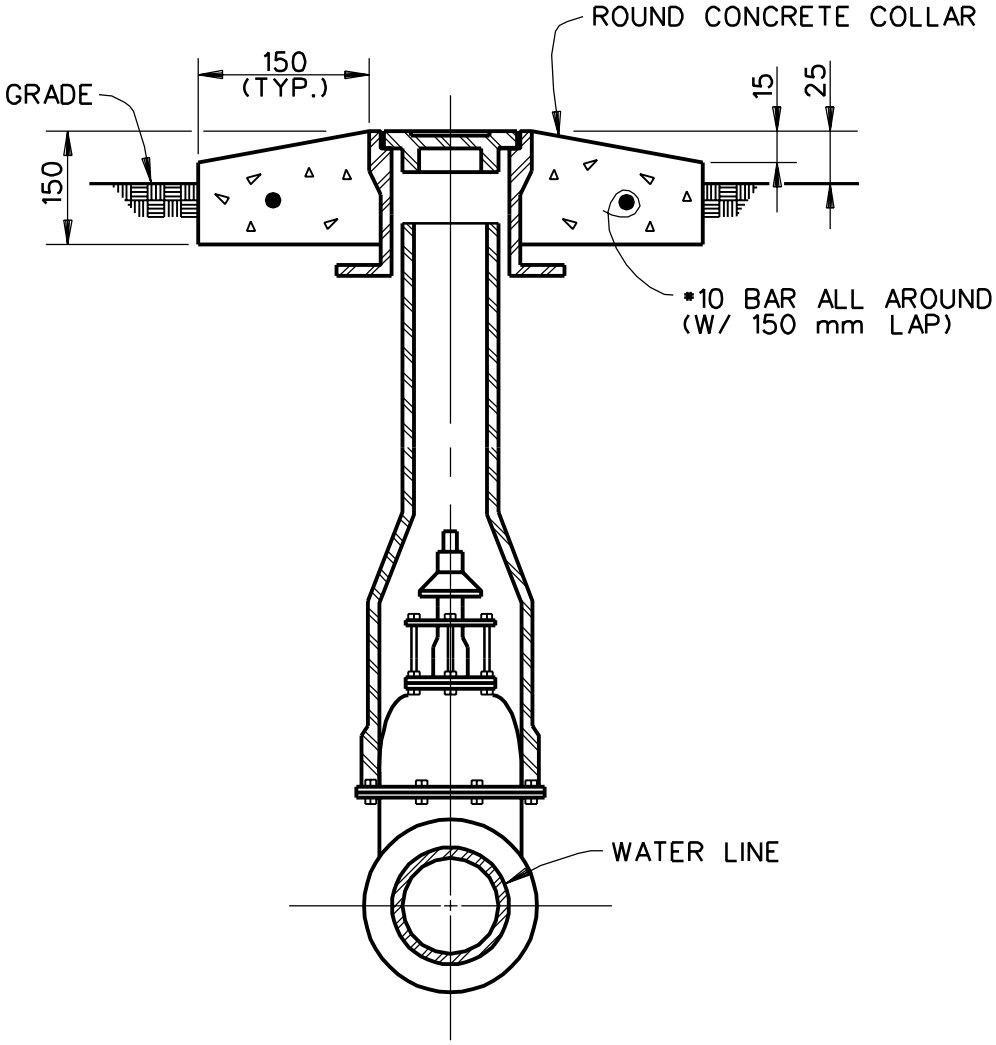

DETAIL - VALVE BOX

N.T.S.

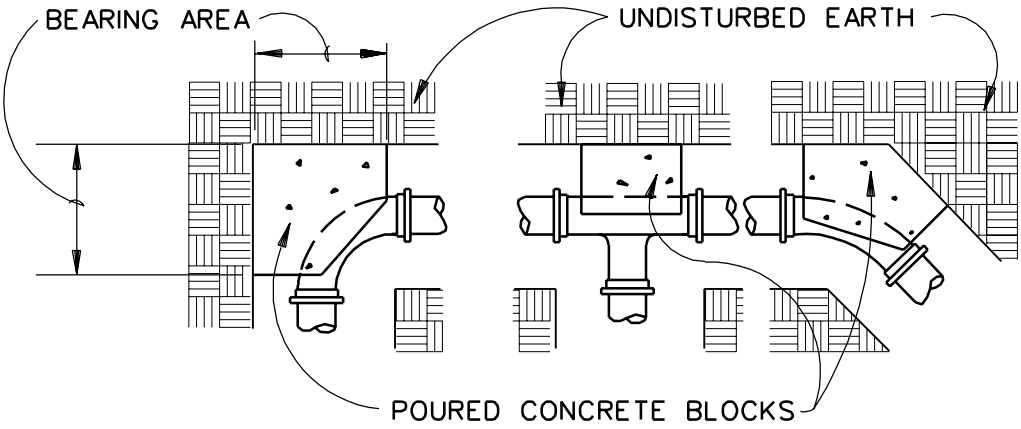

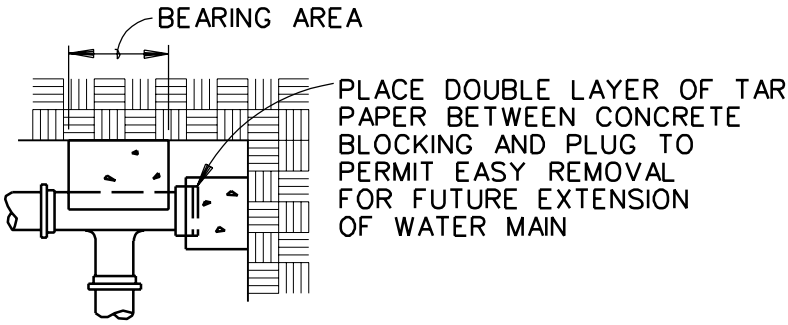

BEARING AREA OF BLOCK IN SQUARE METERS					
FITTING SIZES	TEE & END	90 DEG. BEND	45 DEG. BEND	22½DEG. BEND	11¼DEG. BEND
150 (6")	0.33	0.50	0.23	0.14	0.07
200 (8")	0.59	0.83	0.45	0.23	0.12
250 (10")	0.92	1.29	0.71	0.36	0.19
300 (12")	1.32	1.86	1.01	0.52	0.26

NOTE TO DESIGNER:

AREAS BASED ON PIPE BURST PRESSURE OF 1.72 MPa

SOIL BEARING PRESSURE	MULTIPLIER
50 kPa	2.0
75 kPa	1.33
100 kPa	1.0
150 kPa	0.67

THRUST BLOCK DETAILS

N.T.S.

PLATE C67

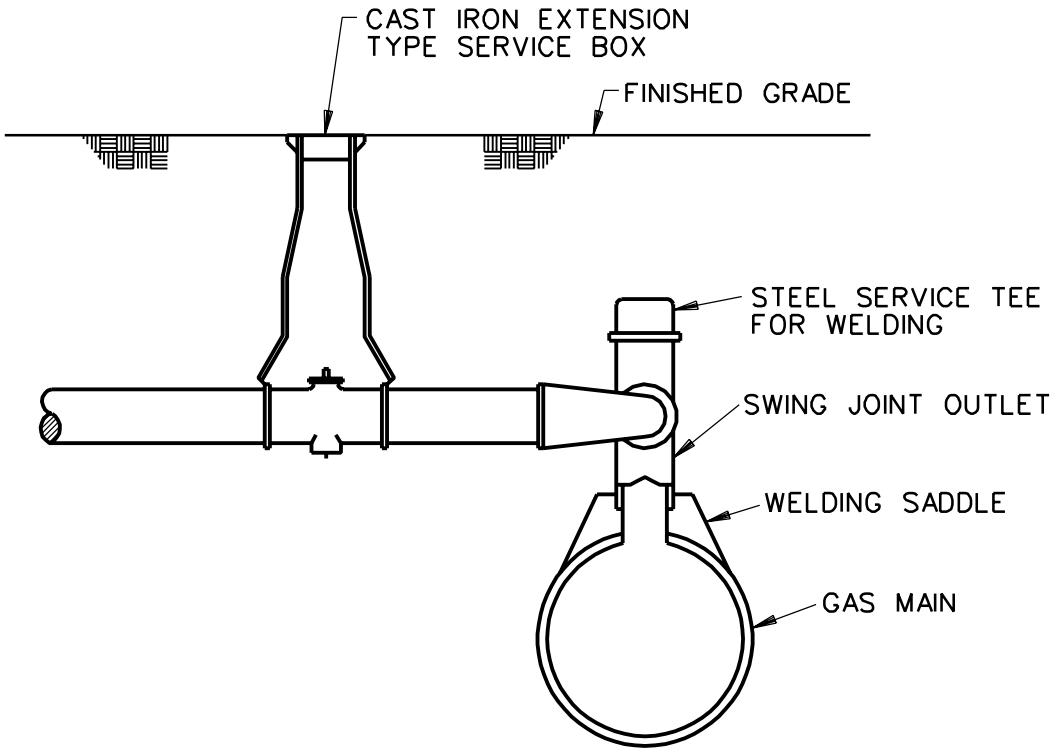

TYPICAL GAS SERVICE CONNECTION

N.T.S.

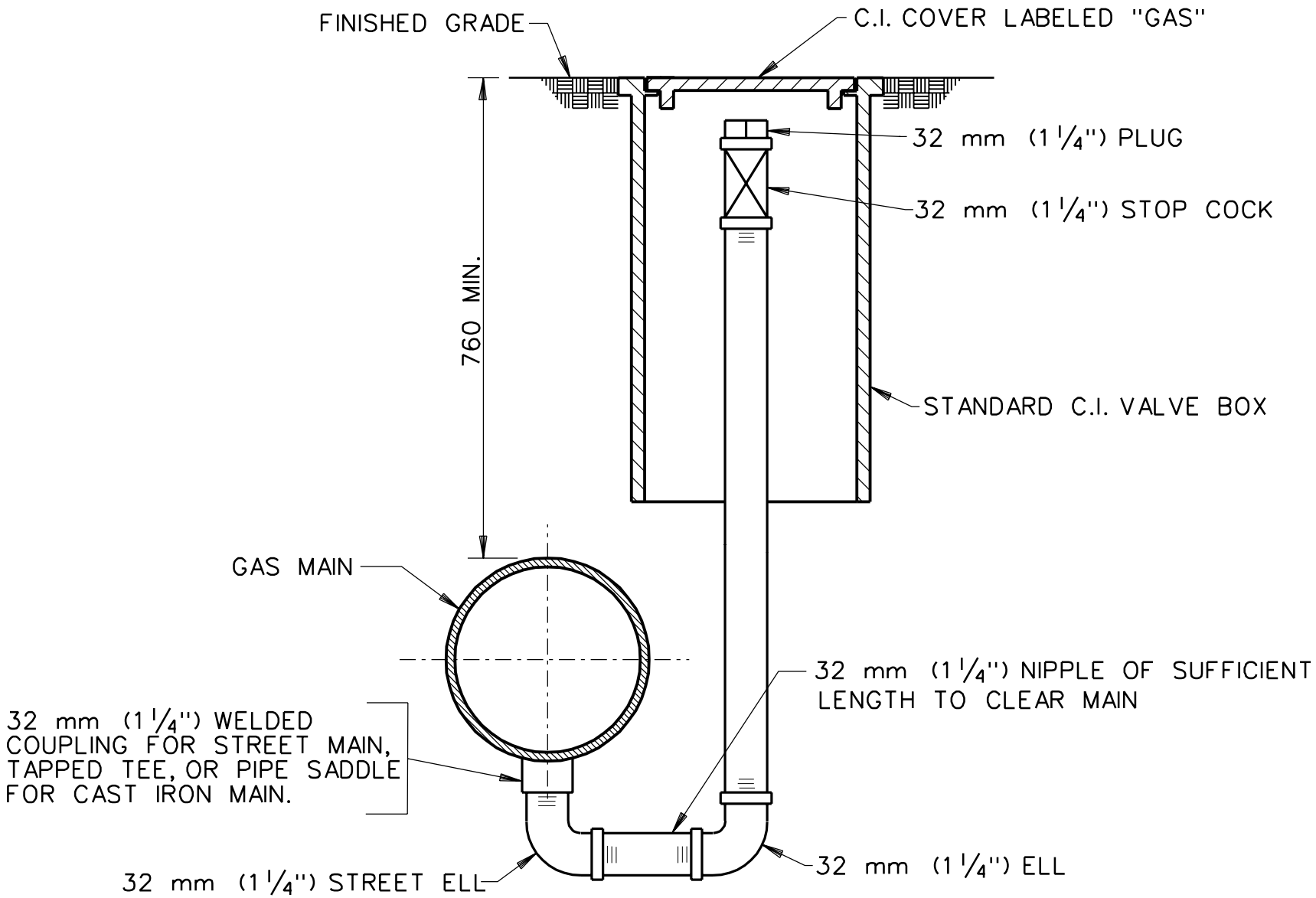

BLOW-OFF AND DRIP

N.T.S.

PLATE C69

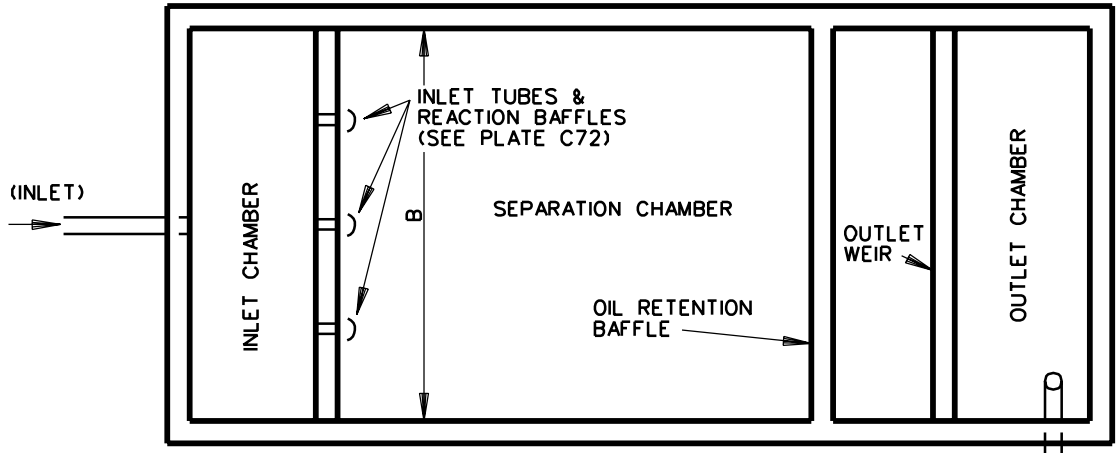

PLAN

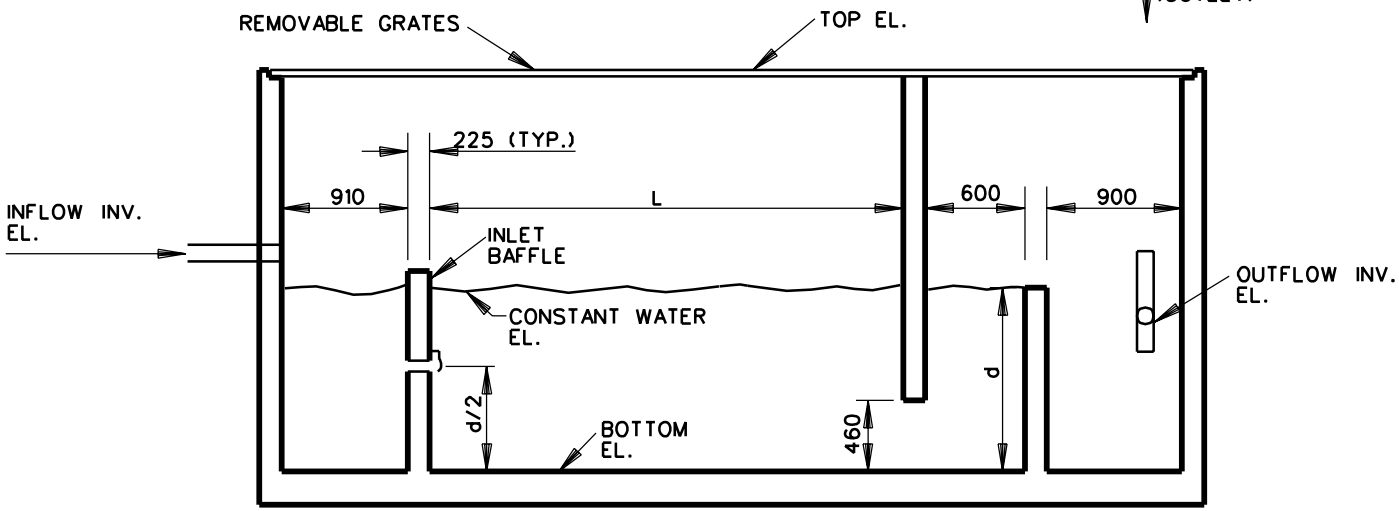

SECTION

NOTES TO DESIGNER:

FOR ARMY PROJECTS: $L = \frac{30\ Q_m}{d \times B}$

FOR AIR FORCE PROJECTS: $L = \frac{45\ Q_m}{d \times B}$

Q_m = DESIGN FLOW m^3/MIN.
$1.0m \le d \le 2.5m$
$2.0m \le B \le 6.0m$
$0.3m \le d/B \le 0.5m$
$L \ge 1.5m$

OIL/WATER SEPARATOR

N.T.S.

NOTE:
ALL DIMENSIONS ARE IN MILLIMETERS
UNLESS OTHERWISE SHOWN.

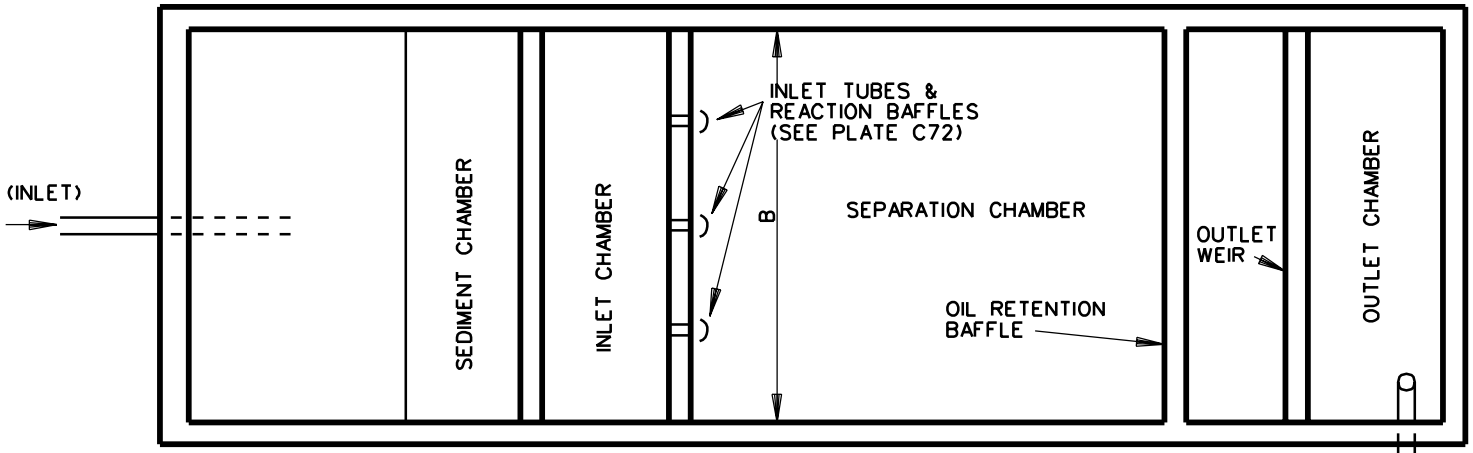

PLAN

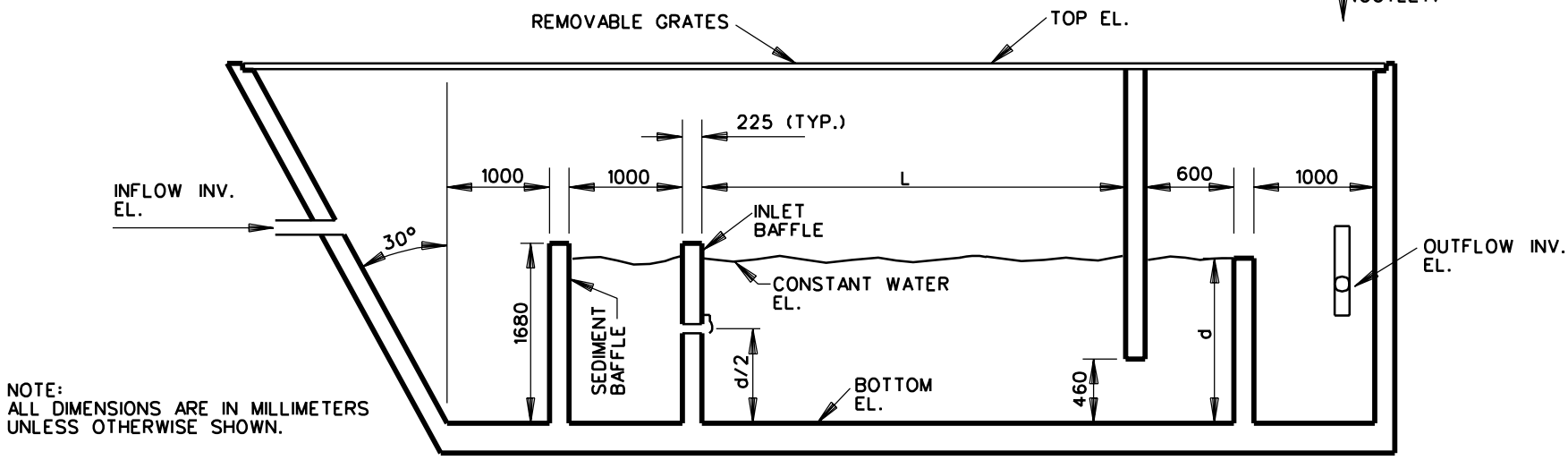

NOTE:
ALL DIMENSIONS ARE IN MILLIMETERS
UNLESS OTHERWISE SHOWN.

SECTION

OIL/WATER SEPARATOR

(WITH SEDIMENT CHAMBER)

N.T.S.

NOTES TO DESIGNER:

FOR ARMY PROJECTS: $L = \frac{30\ Q_m}{d \times B}$

FOR AIR FORCE PROJECTS: $L = \frac{45\ Q_m}{d \times B}$

Q_m = DESIGN FLOW m^3/MIN.
$1.0m \le d \le 2.5m$
$2.0m \le B \le 6.0m$
$0.3m \le d/B \le 0.5m$
$L \ge 1.5m$

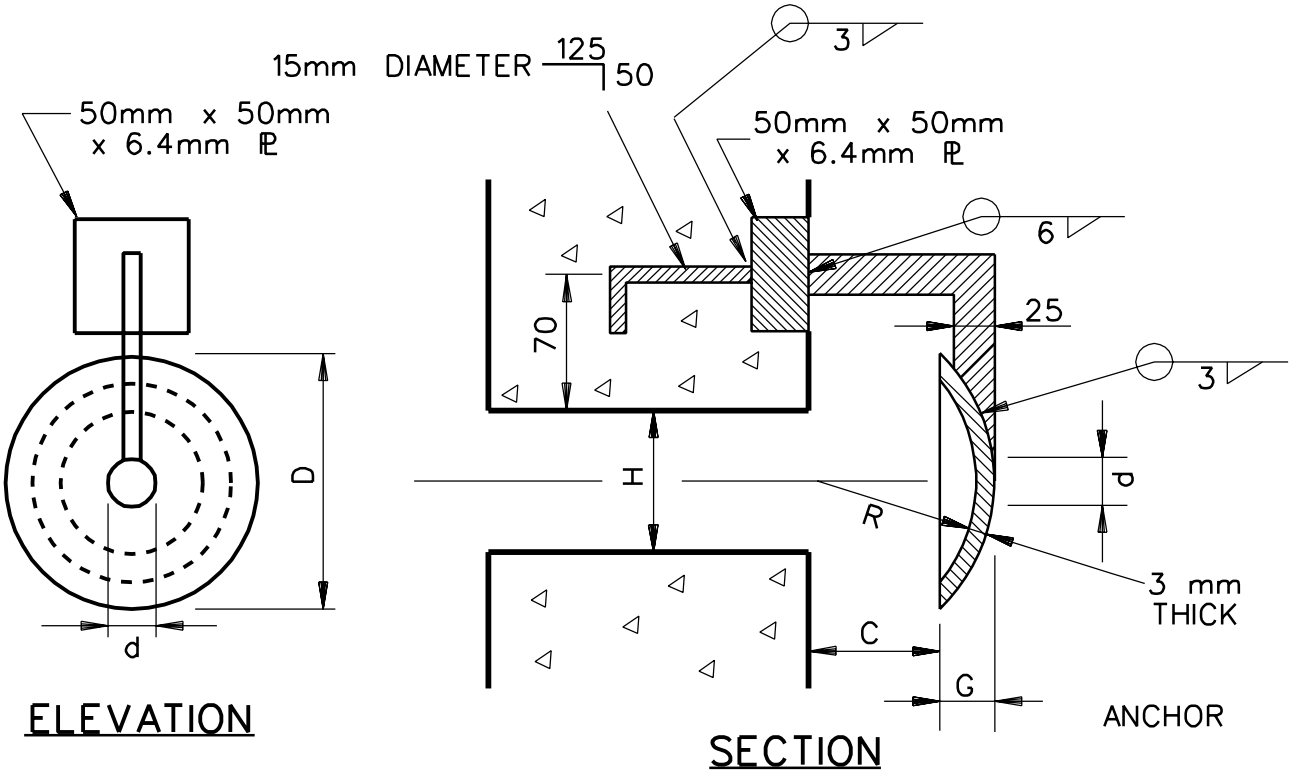

DETAILS - INLET TUBES & REACTION BAFFLES

TUBE DIA., H	R	D	d	C	G
25 (1")	25	50	20	25	12
38 (1 1/2")	38	65	22	32	12
50 (2")	50	75	25	38	13
65 (2 1/2")	65	90	28	44	14
75 (3")	75	100	32	50	15

NOTES:

1. PROVIDE NUMBER AND SIZE OF TUBES AND BAFFLES SO THAT THE VELOCITY OF FLOW THROUGH EACH TUBE IS ≈ 1.0 METER PER SECOND
2. A MINIMUM OF 2 TUBES WILL BE PROVIDED.
3. TUBES SHALL BE EQUALLY SPACED ACROSS THE SEPARATOR CHANNEL.
4. ALL DIMENSIONS ARE IN MILLIMETERS UNLESS OTHERWISE SHOWN.

DETAILS - INLET TUBES & REACTION BAFFLES (FOR OIL/WATER SEPARATORS)

N.T.S.

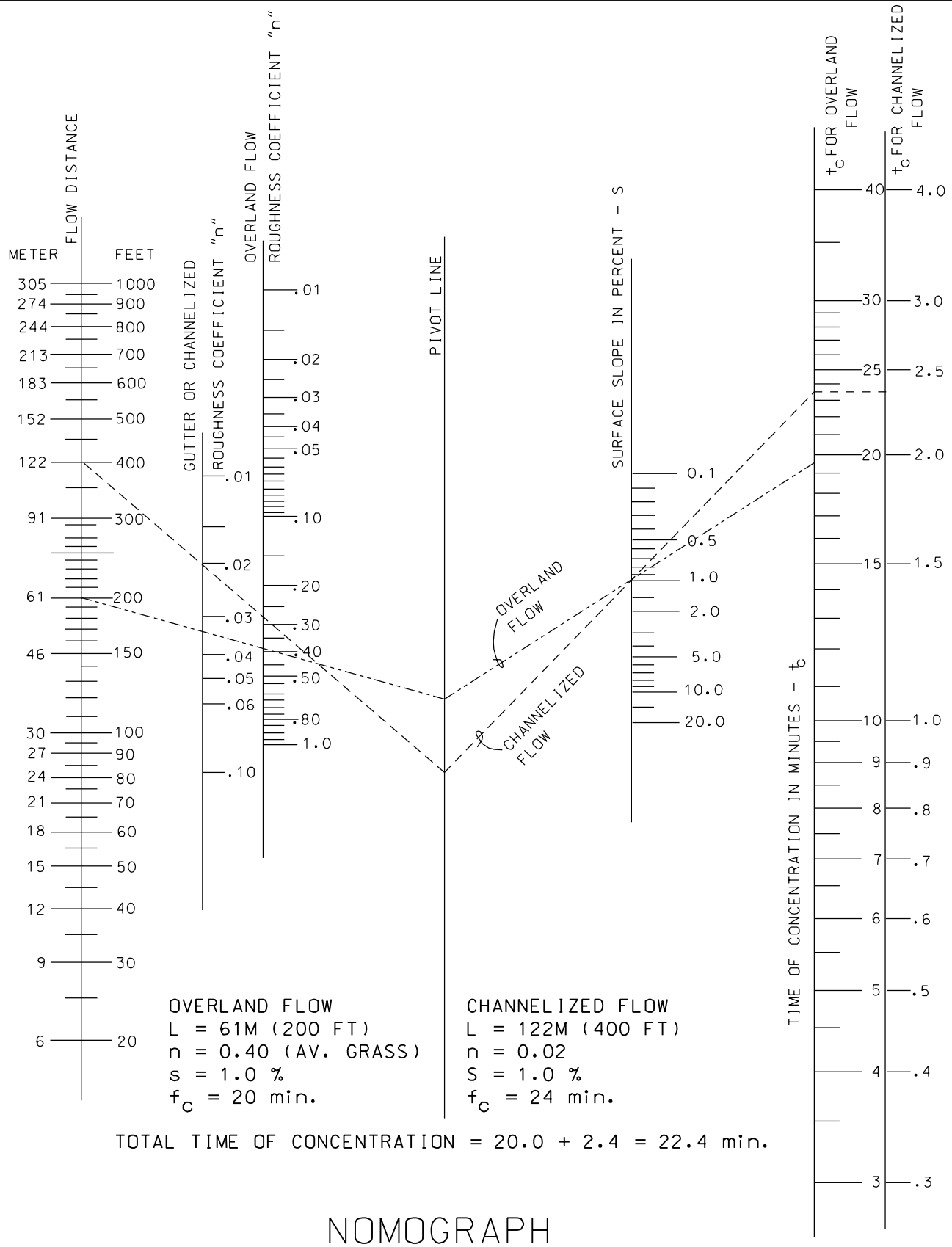

OVERLAND FLOW
L = 61M (200 FT)
n = 0.40 (AV. GRASS)
s = 1.0 %
f_c = 20 min.

CHANNELIZED FLOW
L = 122M (400 FT)
n = 0.02
S = 1.0 %
f_c = 24 min.

TOTAL TIME OF CONCENTRATION = 20.0 + 2.4 = 22.4 min.

NOMOGRAPH
FOR TIME OF CONCENTRATION

SHEET _____ OF _____ ; DATE _____

RAINFALL INTENSITY _____ mm/60 min

FREQUENCY _____

RUNOFF COMPUTATIONS

DRANAGE SECTION _____

PROJECT _____

LOCATION _____

DIVISION OFFICE _____

DISTRICT OFFICE _____

DRAINAGE AREA NO.	DRAINAGE AREA IN METER^3			L	S	t_c	I	F	I-F	C	Q	NOTES:
	PAVED n = 0.02	TURF n = 0.40	TOTAL	IN METER	AVERAGE SLOPE IN PERCENT	IN MINUTES	BASED ON t_c	INFIL-TRATION mm/HR			IN m^3/Sec.	
												TABLE _____

PLATE C74

SHEET _____ OF _____ ; DATE _____

RAINFALL INTENSITY _____ mm/60 min

FREQUENCY _____

SIZE AND PROFILE OF UNDERGROUND STORM DRAINS

TABLE _____

PROJECT _____

LOCATION _____

DIVISION OFFICE _____

DISTRICT OFFICE _____

INLET OR JUNCTION NUMBERS		DISTANCE BETWEEN DESIGN POINTS, IN METER MEASURED TO ℄ OF INLET OR JUNCTION	HYDRAULIC DESIGN DATA ON UNDERGROUND STORM DRAINS														NOTES:
			ADOPTED DESIGN										ELEVATION OF INVERT AT DESIGN POINT, (COL 2) IN METER		ELEVATION OF GROUND SURFACE, IN METER		
					HYDRAULIC GRADE LINE THRU PIPE LENGTH			HEAD LOSS AT CHANGE IN SECTION									
FROM	TO		DESIGN DISCHARGE CAPACITY IN m^3/Sec	SLECTED SIZE OF PIPE, IN METER	SLOPE IN m/m	RISE IN METER	ELEVATION AT ℄ OF UPSTREAM DESIGN PT.	VELOCITY OF INFLOW (V) IN m/Sec	VELOCITY HEAD $\frac{V^2}{2G}$	LOSS COEFFI-CIENT, K	HEAD LOSS, IN METER, $= K \frac{V^2}{2g}$	ELEVATION HYDROULIC GRADE LINE COL 8, PLUS HEAD LOSS COL 12	INCOMING PIPE	OUTGOING PIPE	NATURAL SURFACE	FINISHED GRADE	
1	2	3	4	5	6	7	8	9	10	11	12	13	14	15	16	17	18

PLATE C75

SHEET _____ OF _____ ; DATE _____

FREQUENCY _____

COMPUTED BY: _____

PHASING OF DISCHARGE FOR STORM DRAINAGE

DRANAGE SECTION _____

TABLE _____

PROJECT _____

LOCATION _____

DIVISION OFFICE _____

DISTRICT OFFICE _____

POINT OF DESIGN			CRITICAL RUNOFF TIME TO PRODUCE MAX. FLOW							RATE OF INFLOW AT DESIGN POINT, IN m^3/s, CORRESPONDING TO ADOPTED VALUE OF t' (COLUMN 10)									
DRAINAGE AREA OR INLET NUMBER	DISTANCE, METER		CRITICAL INLET OR AREA	CRITAL INLET OR AREA TIME t_c MIN.	ASSUMED VELOCITY OF FLOW, m/Sec	DRAIN TIME, MIN		APPROX. t'_c (COL. 5 + COL. 8)	ADOPTED t'_c IN MINUTES	INLET OR DRAINAGE AREA NUMBER									total
	FROM MAIN OUTLET	FROM PRECEDING POINT				FROM PRECEDING POINT	ACCUMULATED TOTAL												
1	2	3	4	5	6	7	8	9	10	11	12	13	14	15	16	17	18	19	20

PLATE C76

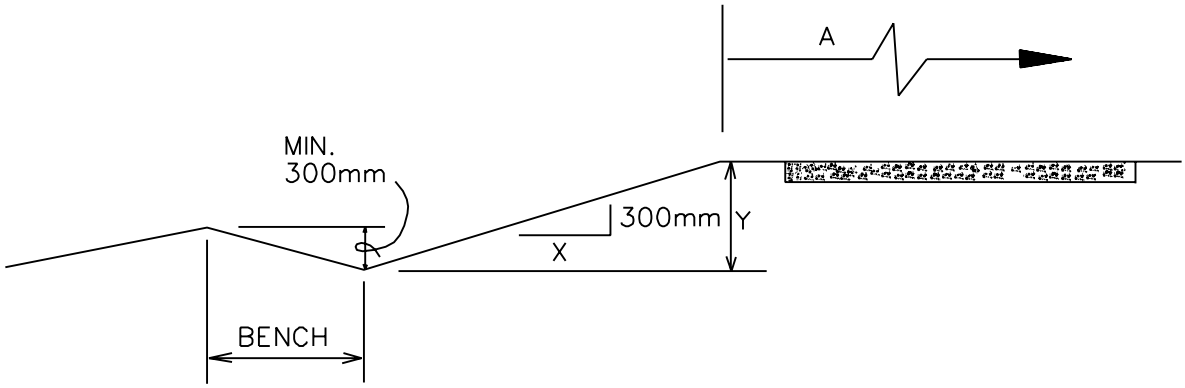

MAXIMUM LENGTH (METER) OF SLOPE WITHOUT BENCHING CAN BE DE3TERMINED BY FORMULA "Y = 4.5M - A/X " WHERE Y = HEIGHT OF CUT/FILL, X = SIDE SLOPE RATIO, A = MAX. OVERLAND FLOW ABOVE SLOPE.

- MAXIMUM VERTICAL DROP OF 4.5M BEFORE BENCHING OR DIVERSION.
- BENCH WIDTH: WIDE ENOUGH FOR CONSTRUCTION AND MAINTENANCE EQUIPMENT
- MAX. REVERSE SLOPE OF BENCH: 5 : 1
- BENCH MINIMUM VERTICAL DEPTH: 300mm
- BENCH GRADIENT TO OUTLET: 1 - 2%
- MAXIMUM FLOW LENGTH OF BENCH: 250 METER

NOTE: IN THE EVENT THAT THE COMPUTED VALUE OF Y IS LESS THAN ZERO SHEET FLOW SHALL BE INTERCEPTED WITHIN THE PAVED AREA OR AT THE EDGE OF THE PAVED AREA.

ANALYSIS OF SLOPE EROSION DUE TO SHEET FLOW

APPENDIX B - CHAPTER II

DESIGN CHECKLIST - CIVIL

CIVIL This checklist lists many important items required for clear and complete plans, specifications, and design analysis. It is not intended to be a comprehensive list of project site development items required to completely check project documents.

1.0 General:

1.1 In the early stages of the design, assure that the scope of work clearly defines all site development items including, demolition, security requirements, site layout, grading, storm drainage, utilities, turfing and landscaping work for the facility. Request additional information from district Technical Leader as needed to clarify project requirements.

1.2 Provide complete legends.

1.3 Include a north arrow and bar scale on all site plans.

2.0 Project Location Map:

2.1 Identify project site and indicate contractor's access and/or haul route(s).

2.2 Show waste and borrow areas when located on Government controlled property. Assure coordination with specifications sections. When waste and/or borrow areas are not available on Government property, add a note that the contractor shall provide these areas at his own expense and responsibility.

3.0 Demolition Plan:

3.1 Provide sufficient data to describe items to be removed such as fence types and heights and pavement types and thickness.

3.2 For items to be partially removed, provide dimensions to define limits of removal, and coordinate limits of existing work to remain with limits of construction.

3.3 Coordinate with utility plans, and show underground utility lines with types and sizes indicated to be removed on plans. Cap at mains when within new construction areas. For clarity utility demolition may be shown on utility plans.

4.0 Layout Plan:

4.1 Provide adequate horizontal controls to locate and layout all new project features. Horizontal controls shall be by dimensions to identifiable physical features or by coordinates. If coordinates are used, at least two known points shall be referenced.

4.2 Identify type(s) of all new surfacing and all existing paving that adjoins new project paving.

4.3 Provide cross-references by conventional system to details and sections found elsewhere in the drawings.

5.0 Grading Plan:

5.1 Provide location and elevation of at least two project benchmarks.

5.2 Assure that all grade changes are defined by spot elevations.

5.3 Assure that grading criteria given in the AEIM is complied with. Particular attention should be given to such items as the differential between finished floor elevations and adjacent outside finished grade, minimum and maximum grades in turfed and paved areas, and handicap criteria.

5.4 Indicate approximate grading limits.

6.0 Joint Pattern Plan:

6.1 Provide a layout plan of the concrete paving joint pattern. Show dimensions of the paving slabs and clearly differentiate between the different types of joints.

6.2 Provide spot elevations at ends of construction joints, and at all other breaks in grade to facilitate form setting and subgrade preparation. (Note: Contours and spot elevations on the grading plan are not sufficient vertical control for concrete paving.)

6.3 Include a legend to identify the different types of joints and paving.

7.0 Utility Plan:

7.1 Include a note that locations shown for existing underground utility lines are approximate, and the contractor

shall verify their exact location prior to commencement of any trenching or excavation operations.

7.2 Provide post indicator valve on water line serving fire sprinklers. Assure post indicators are located in accordance with NFPA 24.

7.3 Assure that building is protected by at least 2 fire hydrants within 107 meters (350 feet) of the building.

7.4 Provide sufficient number of valves on water and gas lines to facilitate construction and maintenance. Provide meters as required.

7.5 Coordinate utility plan with mechanical plan for utility connection points.

7.6 Provide thrust block details for water lines 152 mm (6-inches) and larger.

7.7 Assure that oil-water separators are properly sized and designed for the type of treatment required.

7.8 For aircraft hangars protected by AFFF Deluge Fire Systems, assure that discharge from floor drains is disposed of in accordance with NFPA 409.

8.0 Profiles:

8.1 Provide centerline profiles of all new streets and access roads. Indicate all new and existing utility crossings. Assure vertical curves are used for grade changes in excess of 1%.

8.2 Provide profiles for all new gravity drain lines such as sanitary sewer, industrial waste lines and storm drain lines.

8.3 Include profiles of lengthy pressure lines where frequent conflicts are encountered with intersecting utility lines.

9.0 Details:

9.1 Assure that all details are properly cross-referenced with the appropriate plans.

9.2 Assure that details are provided for all pavement juncture conditions and joints in accordance with the AEIM and referenced criteria.

9.3 Where new construction requires removal and replacement of existing pavement, include applicable details for pavement removal and replacement in accordance with details shown in the AEIM and referenced criteria. Assure that these details are coordinated with the specifications.

10.0 Design Analysis:

10.1 Provide calculations for sizing of all new utility lines.

10.2 Provide calculations for determination of storm runoff and sizing of storm drainage system.

10.3 Discuss rationale for design of all new features.

10.4 Discuss any deviations from criteria or standard practice and any waivers granted, pending or needed.

10.5 List any additional information or criteria needed to complete the design.

11.0 Specifications:

11.1 Coordinate drawings with the specifications to ensure that no conflicts exist between the drawings and specifications.

11.2 Ensure that coordination is effected between cross-referenced sections within the specifications.

11.3 Coordinate with other technical disciplines to prevent inter-disciplinary conflicts, e.g. concrete strength requirements in Division II specifications should match requirements in Division III concrete specifications.

11.4 Assure that submittal registers are included and edited for Government Approval "GA" and For Information Only "FIO" submittal.

CHAPTER III

ARCHITECTURAL

Table of Contents

1. GENERAL
    1.1 Purpose
    1.2 Application
        1.2.1 Metrication
    1.3 Architectural Design Policy
        1.3.1 Reference
        1.3.2 Medical Facilities
        1.3.3 Family Housing
    1.4 Special Instructions
        1.4.1 Design Criteria
        1.4.2 Space Allocations
        1.4.3 Energy Conservation
    1.5 Life Safety/Security
        1.5.1 Reference
        1.5.2 Building Codes
        1.5.3 Fire Protection Design
        1.5.4 Fire Plans
        1.5.5 Barrier Free Design
        1.5.6 OSHA Compliance
        1.5.7 Security Measures for Design
    1.6 Acoustical Design
        1.6.1 Reference
        1.6.2 External Sound Control
        1.6.3 Internal Sound Control
    1.7 Design Documents
        1.7.1 Drawings
        1.7.2 Specifications
        1.7.3 Design Analysis
    1.8 Design Submittals
        1.8.1 Interior Design
    1.9 Building Systems, Materials and Equipment
        1.9.1 Reference
        1.9.2 Building Systems
        1.9.3 Building Heights and Vertical Clearance
        1.9.4 Design Coordination
        1.9.5 Reflected Ceiling Plan
        1.9.6 Materials and Equipment Selection

2. SITE DESIGN
    2.1 References
    2.2 Project Site Design
    2.3 Landscape Design
    2.4 Security Engineering Design

Table of Contents (cont.)

3. CONCRETE
- 3.1 Foundation Details
  - 3.1.1 Exposed Foundations
  - 3.1.2 Concealed Foundations
  - 3.1.3 Perimeter Insulation
  - 3.1.4 Crawl Space Criteria
- 3.2 Architectural Concrete Wall Systems
  - 3.2.1 References
  - 3.2.2 Construction Systems Utilizing Architectural Concrete
  - 3.2.3 Cast-in-Place Systems
  - 3.2.4 Precast Systems
  - 3.2.5 Tilt-up Systems
- 3.3 Material Selection
- 3.4 Finishes
  - 3.4.1 Textures
  - 3.4.2 Pattern Selections
  - 3.4.3 Color
- 3.5 Sizes and Shapes of Castings
- 3.6 Insulation Systems
- 3.7 Detailing
  - 3.7.1 Joint Articulation for Cast-in-Place Concrete
  - 3.7.2 Formwork Planning
  - 3.7.3 Specifications for Architectural Concrete

4. MASONRY
- 4.1 Reference
- 4.2 Foundations Details
- 4.3 Masonry Units
- 4.4 Coursing of Masonry
- 4.5 Openings in Masonry Wall Systems
- 4.6 Corner Guards
- 4.7 Masonry Parapet Construction
- 4.8 Masonry Screen Walls
- 4.9 Masonry Copings/Caps
- 4.10 Exterior Wall Systems
  - 4.10.1 Single Wythe Walls
  - 4.10.2 Double Wythe Walls
- 4.11 Control Joints and Expansion Joints

5. METALS

6. WOOD
- 6.1 Use of Wood Products
- 6.2 Finish Selection for Interior

Table of Contents (cont.)

7. THERMAL AND MOISTURE PROTECTION
- 7.1 Roofing Systems
  - 7.1.1 Reference
  - 7.1.2 Roof Slopes
  - 7.1.3 Roof Decking
  - 7.1.4 Metal Roofing
  - 7.1.5 Roof Insulation and Ventilation
  - 7.1.6 Roof Surfacing
  - 7.1.7 Strip Shingles
  - 7.1.8 Roof Flashings
  - 7.1.9 Roof Drainage
  - 7.1.10 Roof Mounted Equipment
  - 7.1.11 Roof Parapets/Penetrations
  - 7.1.12 Roof Scuttles and Interior Access Ladders
- 7.2 Caulking and Sealants
- 7.3 Waterproof Membranes
- 7.4 Insulation
  - 7.4.1 Specification Options
  - 7.4.2 Under-floor Insulation

8. DOORS AND WINDOWS
- 8.1 Entries
  - 8.1.1 Main Entries
  - 8.1.2 Vestibules/Foyers
  - 8.1.3 Soffits and Entry/Vestibule Ceilings
- 8.2 Door Systems
  - 8.2.1 Interior Personnel Doors
  - 8.2.2 Interior Fire-Rated Doors
  - 8.2.3 Exterior and Shop Doors
  - 8.2.4 Heavy Duty Doors
  - 8.2.5 Folding Doors
  - 8.2.6 Mechanical Room Doors
  - 8.2.7 Music Room Listening Booth Doors
  - 8.2.8 Sound-Rated Doors
  - 8.2.9 Overhead Doors
  - 8.2.10 Hangar Door criteria
- 8.3 Door Details
- 8.4 Weatherstripping
- 8.5 Door Number
- 8.6 Door Schedule
- 8.7 Window Systems
  - 8.7.1 Window Selection
  - 8.7.2 Window Details
  - 8.7.3 Window Screens
  - 8.7.4 Glazing Systems
  - 8.7.5 Storm Window

Table of Contents (cont.)

8.8 Hardware
8.8.1 Hardware and Keying Systems
8.8.2 Hardware Schedule
9. FINISHES
9.1 Lath and Plaster
9.1.1 Stucco
9.1.2 High Strength Gypsum Plaster
9.2 Gypsum Wall Board
9.2.1 Control Joints
9.2.2 Specifications (CEGS 09250)
9.2.3 Water-Resistant Gypsum Wall Board
9.3 Paints and Protective Coatings
9.4 Carpet

10. SPECIALTIES
10.1 Signage
10.2 Wardrobe/Locker
10.3 Raised Floor Systems

11. EQUIPMENT
11.1 Food Service
11.2 Waste Handling Equipment/Transformer

12. FURNISHINGS
12.1 Furnishings Selection
12.2 Sample Boards
12.3 Colors
12.3.1 Reference
12.3.2 General

13. SPECIAL CONSTRUCTION
13.1 Project Criteria
13.2 Commercial Standards
13.3 Underground (Windowless) Structures

14. CONVEYING SYSTEMS
14.1 Elevator
14.2 Hoist/Bridge Crane

15. MECHANICAL
15.1 Plans and Elevations
15.2 Fire Protection for Hazardous Spaces
15.2.1 Reference
15.2.2 Criteria References Cite Requirements

Table of Contents (cont.)

16. ELECTRICAL
- 16.1 Plans
- 16.2 Interior Architectural Lighting
- 16.3 Illuminated Exit Signs
- 16.4 Exterior Architectural Lighting
- 16.5 Architectural Lighting Specifications

Appendix A

Final Interdisciplinary Design Checklists

Architectural Design Review Checklist

CHAPTER III

ARCHITECTURAL

1. **GENERAL**.

1.1 **Purpose**. The purpose of this chapter is to provide regional architectural design guidance to design agents for construction in the Southwestern Division (CESWD).

1.2 **Application**. These instructions apply to CESWD, District Offices, and design agents within CESWD.

1.2.1 Metrication. The metric units used are the International System of Units (SI) adopted by the U.S. Government as described in Chapter I, paragraphs 3. and 4.2.1.

1.2.1.1 Masonry. Concrete masonry units (CMU) and clay brick manufactured to metric standards are not readily available in the Southwestern Division. New facilities are typically dimensioned in metric units that are modular with hard metric masonry products. In accordance with P.L. 104-289 the Contractor may use soft metric CMU and brick, equivalent to Standard English inch-pound (I-P) units system CMU and brick during construction. Plans and specifications should make the Contractor responsible for changes in reinforcement detailed on P&S and all costs associated with use of CMU manufactured to I-P units.

1.3 **Architectural Design Policy**.

1.3.1 Reference:

ER 1110-345-100. Design Policy For Military Construction.
TI 800-01. Design Criteria.
Military Handbook MIL-HDBK 1190.

1.3.2 Medical Facilities are considered special projects requiring review and approval by higher authority. Design criteria for medical facilities are:

Military Handbook MIL-HDBK 1190 and MIL-HDBK 1191

1.3.3 Family Housing is considered a special project category requiring review and approval by higher authority. Refer to:

ER 1110-3-104, Family Housing Design
TI 800-01, Design Criteria (Appendix F, Family Housing Facilities).
TI 801-02, Family Housing
Project Engineering Instructions
SWD Criteria Letter III 1-01.

1.4 **Special Instructions**. Appendix A to the A-E contract and design criteria emphasize significant items directly pertinent to the project or which require special attention for design quality and review coordination. Essential architectural instructions follow:

1.4.1 Design Criteria. Reference:

TI 800-01, Design Criteria.
MIL-HDBK 1190.

1.4.1.1 Functional Criteria. Using Services are normally responsible for initiating program documents and functional design criteria for a project.

1.4.1.2 Economic Criteria consists of the programmed amount (PA) and the Scope. It is incumbent on all project personnel to design the project within these tandem limitations.

1.4.1.3 Environmental Criteria. A comprehensive understanding of the program and environmental conditions for the project by the designer are critical to achieving high quality design. Therefore the designer will review the above references together with program documents to assure that sufficient environmental data are available at the conclusion of pre-design or site conferences to initiate design.

1.4.1.4 Comprehensive Design. Since variable levels of planning and design are provided with program documents including site adapted documents, it is important to evaluate each category of criteria to assure a balanced design

response. The architectural design therefore includes requirements for comprehensive analysis of master plan/future expansion, visual features, accessibility, spatial composition, energy conservation, functional organization, life safety, building systems, materials, equipment and economic justification.

1.4.2 Space Allocations. Reference TI 800-01, Chapter 5, and MIL-HDBK 1190 provides basic space provisions for various types of facilities. Additionally space allocations are established by functional needs of individual projects. As an economic limitation, designers are required to keep the design within authorized scope. In relationship to national standards, Division projects average lower in unit costs but slightly above scope limitations due to increased space needs for air conditioning equipment and insulated masonry wall systems. It is therefore important to confirm net and gross spaces included or excluded from scope at the predesign conference and to assure adequate space for mechanical equipment. When minor variations in scope within flexibility limits authorized by the using agency could affect overall design and economic benefits (e.g., modular design), the designer will cite the adjustments and basis therefore in the earliest design analyses submittal for Using Service coordination and approval.

1.4.3 Energy Conservation is essential to obtaining design quality. Evaluation of orientation, infiltration, amount of glazing, solar shading and rejection will be performed in conceptual stages and include the following areas of investigation.

1.4.3.1 Reference:

TI 800-01, Design Criteria.
MIL HDBK 1190.

1.4.3.2 Passive Solar Design is a definite and continuing means of achieving energy savings over the life of individual facilities. Therefore, an explicit effort shall be made to evaluate the solar design conditions for building sites and facilities, establishing effective orientation of facilities and fenestration for energy efficiency. Normal orientations south to southeast which achieve quick warm-up in winter and maximum ventilation through cooling periods have proven beneficial in the southwest region. Where practical, to minimize summer solar heat load, maximize winter heat gain and take advantage of natural convective cooling in the summer, the longer side of the building should face within 15 degrees

of true south. Due to the need for maximum ventilation for cooling in most areas, earth berms have limited application, except in areas where evaporative cooling is utilized or where sheltering is desirable for high wind protection.

1.4.3.3 Active Solar Design shall be as directed in the project criteria and A-E contract.

1.4.3.4 Daylighting and Ventilation are essential for most construction accomplished within CESWD to meet minimum building code requirements for habitable spaces, fire access and energy conservation. Daylighting will be an integral element for architectural design and provided for domiciliary, office/administrative spaces and waiting or public area as appropriate. It is also recommended for restroom/locker spaces. Operable windows will be used unless the using agency specifically requests fixed-glass, non-operable lights. Windowless structures are not recommended where personnel loads are high or as a basis for energy conservation. Additional criteria for Window Systems are cited below.

1.4.3.5 Energy Impact. Pursuant to references except for locations having more than 4,000 heating-degree days, glazed area will be based upon no more than 15 percent of the total peripheral wall surface area floor-to-floor or floor to horizontally intersecting line of insulation above unless otherwise shown beneficial by the Design Analysis. Window and opening sizes will meet minimum provisions of the Life Safety Code and in case of conflict with energy conservation criteria, the Life Safety Code shall govern.

1.4.3.6 Skylights will be double glazed for all air-conditioned facilities for energy conservation.

1.4.3.7 Solar Screening or Shading to reduce cooling loads in the southwest will be employed in accordance with references above. The basis for the solar screening or shading will be shown in the architectural and mechanical design analysis.

1.5 **Life Safety/Security**.

1.5.1 Reference:

National Fire Protection Code (NFPA).
Uniform Building Code.
International Building Code.
TI 800-01, Design Criteria.
MIL-HDBK-l008C, Fire Protection for Facilities.

EC 1110-1-92, Classification of Type of Construction
MIL-HDBK 1190.
TM 5-853-1, TM 5-853-2, TM 5-853-3, Security Engineering.

1.5.2 Building Codes. Compliance with minimum life Safety (N.F.P.A. No. 101) and fire protection codes cited by above references is mandatory. If deviations from criteria or codes are required, they must be approved and fully documented and reported in conformance to ER lll0-345-l00. Compliance with local building codes is not mandatory on military installations; however, compliance is recommended as applicable to the project.

1.5.3 Fire Protection Design Construction Classification. The designer is technically responsible to properly classify project facilities for fire protection purposes and to develop the functional layout criteria into a plan that will meet minimum criteria cited above. Construction classifications and functional layouts issued as project criteria in program documents are essentially budgeting data and require analysis and confirmation. This is particularly important where buildings may have multiple occupancy classifications and hazardous spaces. The Uniform Building Code will be utilized for area and space limitations relating to fire classification. For guidance on partitioning, refer to NFPA 220.

1.5.4 Fire Plan(s) will be developed at the earliest stages of design. Fire protection plans will be shown in concept or project definition documents. Plans will identify all horizontal and vertical fire separations by hourly rate and show all fire fighting access, sprinkled areas, exit conditions and distances. Portable fire extinguishers will be furnished and installed by the using service as Government Furnished Equipment. In facilities where appearance is important, extinguisher cabinets may be provided, and will be located in accordance with NFPA Standard 10. The designer will show location of all fire extinguishers on Final Plans for a compliance check by the Using Service Fire Marshal. Careful coordination of final plans will be made between disciplines to eliminate conflicts and assure adequate location and clearance for piping, sprinklers, fire dampers and alarms and that all drawings and specification items are consistent. Fire Plan(s) with complete supporting design analysis are required for final design submittal. See Chapter IX, Part 2, Chapter 7 of the AEIM for additional requirements.

1.5.5 Barrier Free Design. Reference:

TI 800-01, Design Criteria.
MIL-HDBK 1190, Chapter 1.
Uniform Federal Accessibility Standards (UFAS)
American with Disabilities Act
Accessibility Guidelines (ADAAG)

The Using Service normally determines the applicable design of special features for the physically handicapped based on references. Minimal access is usually recommended for consideration at initial stages of design as many of the provisions improve ordinary use of the site and facilities with negligible cost impact. Full compliance with UFAS and ADAAG is required for medical facilities unless a waiver is obtained from ASD(FM & P). References present uniform standards for the design, construction, and alteration of buildings so that physically handicapped persons will have ready access to and use them in accordance with TI 800-01. Military Program documents will establish the number of able-bodied personnel using a facility and the required accessibility to the physically handicapped. The project design analysis will confirm requirements of the using service and TI 800-01 and describe the extent of accessibility provided.

1.5.6 OSHA (Occupational Health and Safety Act) compliance is required in accordance with the TI 800-01 and General Safety Requirements Manual EM 385-1-1. OSHA standards pertinent to building design and construction are described in OSHA publication No. 2207, "Construction Standards," available from the Government Printing Office, or local OSHA Area Offices. Lead Based Paint and Asbestos Surveys are routinely required for demolition and renovation projects and are typically the responsibility of the using agency.

1.5.7 Security measures for design will be determined by the Using Service and set forth in project criteria. Careful differentiation shall be made between fire and criminal, terrorist or subversive requirements. Refer to TM 5-853-1, TM 5-853-2, and TM 5-853-3.

1.6 **Acoustical Design**

1.6.1 Reference:

TM 5-805-4, Noise and Vibration Control.
AFM l9-l0, Planning in the Noise Environment.

1.6.2 External Sound Control. Exterior noise sources will be determined and described in the concept of early preliminary site planning analysis. Sound pressure levels of sound sources affecting the design will be coordinated with the Using Service and set forth in the analysis with correlated sound transmission control measures, such as building setbacks, sound barriers, building configuration and orientation. On Air Force projects and Army projects located near airfields, the designer will use the published day-night average sound level (LDN value) at the site as the ambient outside noise level in decibels.

1.6.3 Internal Sound Control will be determined and described in the concept or early preliminary architectural design analysis. The design sound pressure levels for operational equipment and mechanical/electrical building equipment and sound reduction requirements for privacy and/or security will be coordinated with the Using Service and set forth in the analysis. The architectural analysis will establish the sound transmission classification for the exterior wall, interior partitions, roof and ceiling systems as applicable.

1.7 **Design Documents**

1.7.1 Drawings. Refer to the Drafting Chapter

1.7.1.1 Reference:

A/E/C CADD Standards
ER lll0-345-700, Design Analysis, Drawings and Specifications.
CESWD-AEIM Chapter VIII - Drawings

1.7.1.2 Architectural, Format, Legend Symbols and Abbreviations recommended are referenced in CESWD AEIM Drawings Chapter VIII.

1.7.1.3 Standard Details developed for repetitive design conditions are normally furnished for incorporation into the contract documents. These details are proven for regional design conditions but may require adjustment or omission of options to fit the project design. For Standard Details example sheets available, refer to CESWD AEIM Drawings Chapter.

1.7.1.4 Photographs. The use of photographs on drawings to depict existing site conditions and/or existing conditions in

building rehab projects is encouraged. Specific procedures are described by contract instructions.

1.7.1.5 Generic CADD Details. Copies of computer aided design and drafting details are available from the CADD Details Library on a CD-ROM or downloaded from the internet web at http://tsc.wes.army.mil/Products/cadd_details/

CADD/GIS Technology Center
USACE Waterways Experiment Station
3909 Halls Ferry Rd.
Vicksburg, Mississippi 39180-6199

These standards are developed and proven for repetitive design but require adjustment or omission of options for regional and project design conditions.

1.7.2 Specifications.

1.7.2.1 Reference:

ER 1110-1-855, Specifications.
AEIM Chapter VII - Specifications.

1.7.2.2 Architectural Specifications will be based on CE Guide Specifications in accordance with above references as applicable. Most of these specifications carry material options for maximum competition. When these material options are unsuitable to meet project criteria, this manual or local design conditions, they will be omitted. However, maximum competition is to be maintained with reasonable specification options that will assure a quality project.

1.7.2.3 New Products or materials not covered by the Guide Specifications will be investigated and specified to assure reasonable competition and quality. New products and innovative construction should be proven on smaller or pilot projects before acceptance for high cost elements of construction.

1.7.2.4 Coordination between designers and specification writers will maintain consistent terminology and assurance that reproduced specifications are concise and directly applicable to the individual project in order to facilitate construction control and avoid contractor claims. "Notes" included in each Guide Specification will be given careful consideration during preparation of the design and drawings. Many criteria items of significance to the designer are included in these notes for specific design elements.

1.7.3 Design Analysis.

1.7.3.1 Reference:

ER lll0-345-700, Design Analysis, Drawings and Specifications.
AEIM Chapter IX-Design Analysis.

1.7.3.2 Architectural Design Analyses are required at each design stage in accordance with above references including initial sketch submittals as designer confirmation and explanation of the basis for drawing presentations and for review and project record purposes. The initial design analysis may be brief subjective explanations based on experience and available environmental criteria. As the design is developed, design analysis should be progressively objective with supporting analytical and engineering bases to confirm original subjective determinations. It is increasingly important to avoid descriptive bases and incorporate sufficient environmental conditions and technical bases for site and facility design, including quantitative data for space allocations, energy conservation, acoustical design and life safety in order to provide an objective basis for evaluation and record.

1.7.3.3 Summary Format. A detailed format for the architectural design analysis is shown in Chapter IX.

1.8 **Design Submittals requirements** are cited in Chapter XI, A-E Contract Appendix "A," the Design Instructions and discussed in the Predesign Conference.

1.8.1 Interior Design.

1.8.1.1 Reference:

ETL 90-7 Air Force Interior Design Policy
DG lll0-345-122 Design Guide for Interiors.
ER 1110-345-122 Interior Design.
Chief of Engineers Initiative on Interior Design, 20 April 1988.

1.8.1.2 Scope of Interior Design. Interior design will be provided for both new and modernization projects in accordance with cited references and as funded by either military construction appropriations (MCA) or non-appropriated funds (MCF). Preparation of interior design will coincide with the project design process and include interior design analysis as

outlined in the Design Analysis Chapter. Refer also to paragraphs 9 (finishes), 10 (specialties) and 12 (furnishings) of these architectural design instructions. During the project engineering/concept/project definition design phase, those responsible for interior design will meet with representatives of the Using Service to confirm interior design criteria. Interior design is divided into two types of service as outlined below:

1.8.1.3 Building Related/Structural Interior Design (SID) service includes basic space planning and accommodation of furnishings and equipment within the building. This service entails design and selection of items built-in or part of the building construction such as interior finishes and colors, shades or blinds, graphics, signage and decorative lighting. This service will be provided as an integral part of project design and will include:

Project Engineering/Concept/Project Definition/Primary Submittals.

- Interior Layout/Furniture Footprints at 1:100 to 1:50 scale using standard furniture sizes to assure adequacy of functional space and clearance for public and repetitive spaces.

- Finish and Color Schedules to identify general finishes, colors and textures.

- Interior Design Analysis providing design objectives and basis for functional layout and material selections.

- Sample/Color Boards with proposed structural finish materials will be coordinated or coded with Finish/Color/Graphics

Schedules showing manufacturers name and product number for special designations. Initial carpet selections and wall finishes will be submitted simultaneously. Size samples to show true color, pattern and texture. Submittals will comprise five (5) originals with sample chips mounted on card stock and bound in three (3) ring notebooks. Place title in lower right hand corner.

Final Design Submittals. Complete contract documents as outlined above including built-in details, graphics, signage, decorative lighting, and equipment colors. Submit two originals-one master set and one for field construction.

1.8.1.4 Furniture Related/Comprehensive Interior Design (CID) includes the space planning and design, selection, color coordination and arrangement of interiors and building material finishes, furniture and equipment provided or procured separately from the construction contract. This service entails design and preparation of procurement documents for items detached from the building such as furniture, draperies, rugs, movable planters, and art work. The service, when requested by the using agency, will be provided as an extension of project design for development during the construction phase to include:

Preliminary Submittal.

- Title Sheet and Index.

- Updated Building Related/Structural Design with corrections/adjustment recommendations.

- Interior Design Analysis
  (See Format in Design Analysis Chapter)

- Interior Layout/Furniture Footprint to show proposed furnishings and equipment placement.

- Furniture/Furnishing Illustration Sheets.

- Cost Estimate.

- Submittal Matrix.

Final Submittals.

- Completed documents as above. Corrected finals will be submitted after confirmation of contractor finish materials.

- Furniture Order Forms/Bills of Materials with sufficient descriptive information for government procurement of furniture and furnishings.

- Specifications.

- Maintenance Guide that includes housekeeping guidelines for product maintenance based on current industry methods and technology will be prepared and/or coordinated and obtained through specification requirements.

1.8.1.5 Brochures. The above submittals will be provided in A4 metric, 210 x 297 mm size, hard-cover brochures with operable multi-ring binders. Brochures will be identified with project name and location. Fold-outs, A3 metric, 297 X 420 mm size, should be used as needed for legibility. The following reproductions will be provided as necessary or required to illustrate significant interior design features:

- Sketch Reproductions in black and white.

- Color Photos of color renderings 200mm x 250mm (8" x l0") size.

- Color reproductions of recommended interior graphics/ art-work such as murals, pictures and other wall-hung art.

- Reproduction of reduced sketches as determined by interior designers.

1.9 **Building Systems, Materials and Equipment**.

1.9.1 Reference:

TI 800-01, Design Criteria.
MIL-HDBK 1190.

1.9.2 Building Systems and Assemblies or major components which meet project criteria and regional design conditions will be evaluated on the basis of constructability, economy and maintenance. Floor, roof and wall assemblies will be designed with stock components subject to maximum competition as cited by HQUSACE Guide Specifications. Modular systems will be utilized where slight variables in scope or structural framing systems will satisfy function and benefit economy of construction.

1.9.3 Building Heights and Vertical Clearances:

1.9.3.1 Ground floor elevation will be carefully coordinated with civil design and will normally be established at 600mm above finished grade. For small structures, family housing and shop buildings with adjacent paving, ground floor elevation may be set at 300mm above finished grade. The finished grade will be sloped at 5 percent for the first 3 meter away from the building.

1.9.3.2 Ground floor to ceiling height on multi-story buildings will be set approximately 600mm higher on average than upper-floor to ceiling levels, and as required to establish proper building scale.

1.9.3.3 Floor to ceiling heights will in no case be less than 2290mm clear distance. Where a finished ceiling is required, it will be applied as near to structural framing members as practicable. Duct-work will be placed through open framing members or below the finished ceiling and furred in within finished spaces to minimize height. When consistent with fire codes, duct-work should be placed over corridors or at intersections of walls and ceilings where reduced ceiling height is practical. The designer will integrate the various building systems affecting building height for overall economy and explain any unusual height allowances in the design analysis.

1.9.4 Design Coordination involving major components interface such as exposed structural framing, control/expansion joints, plumbing and sprinkler systems, conveyor, exhaust and lighting systems is important for architectural control of the facility design and to minimize construction modification cost. Therefore, the A-E will make an interdisciplinary review utilizing overlays as necessary to check incremental design submittals.

1.9.5 Reflected Ceiling Plan. A reflected ceiling plan will be provided for all new ceilings to ensure coordination of mechanical, electrical, expansion joints, grid patterns, and sprinklers.

1.9.6 Materials and Equipment Selection will be made in accordance with project criteria and local design conditions for practical maintenance performed by the Using Service. Options listed in the CEGS Guide Specifications will be included when they are appropriate to regional or project design conditions. Special accent finishes may be utilized for public focal points and entries. Selections and options for color and finish of exposed-to-view metal items such as roofing, flashing, window and door and equipment finishes will be architecturally coordinated. The following paragraphs are aligned with Construction Specifications (CSI) format and provide detail guidance:

2. **SITE DESIGN**:

2.1 **References**:

TI 800-01, Design Criteria.
MIL-HDBK 1190.
Installation Design Guide (IDG)
TM 5-803-14, Site Planning and Design.
TM 5-853-1, Security Engineering, Project Development.
TM 5-853-2, Security Engineering, Concept Design.
TM 5-853-3, Security Engineering, Final Design.

2.2 **Project Site Design** based on actual site conditions and comprehensive functional, economic and environmental criteria is critical to achieving a high quality project. The above references will be thoroughly reviewed to assure that site, security design basis threat, and environmental criteria are sufficiently complete at the conclusion of the Predesign or Site Conference to initiate project design. Since variable levels of site planning are provided by master plans and program criteria, it is important to note that the A-E is responsible for the Project Site Design unless otherwise directed. Therefore the site design analysis will be architecturally comprehensive including:

- Master Plan Interface
- Site Utilization
- Site Organization and Circulation
- Facility Locations and Massing
- Facility Orientation
- Clearances and Life Safety
- Design Basis Threat(s) and Level(s) of Protection

Design and specifications will be carefully coordinated to assure the optimal visual setting and appearance of facilities. The overall design should enhance the natural character of the site and minimize environmental impact and distractions from utility services and other project elements. For additional guidance refer to the Civil Chapter.

2.3 **Landscape Design** will be an integral part of the Project Site Design from initial design stages avoiding latent cosmetic development. Landscape design for erosion control is mandatory and basic to the construction contract. Outside space and features including finish surfaces, site furnishings, landscape accessories, signage and fencing will be integrally developed for each project. Landscape design will essentially be based on Energy Conservation analysis and

maximize use of indigenous vegetation. Installation Design Guides (IDG) provide approved plant lists. The scope of complete landscaping is often affected by construction cost reductions, so contract documents will be developed to facilitate options for contract award and future completion. For additional guidance on turf and landscaping refer to chapter II, Civil.

2.4 **Security Engineering Design** requirements will be an integral part of the project site design from the initial design stages. For additional guidance on site security design see Chapter II, Civil and Chapter IX, Design Analysis.

3. **CONCRETE**:

3.1 **Foundation Details**.

3.1.1 Exposed Foundations are recommended for one-story buildings on substantially level sites. Foundations should be exposed a minimum of 200mm minimum and chamfered or otherwise detailed on publicly exposed buildings. A weather sill step will be provided in the foundation of buildings designed for non-arid areas consisting of a minimum standard brick course step below the finished floor elevation with weep holes at cavity walls in accordance with guide specifications. Where wall siding is used, extend siding 50mm over grade beam and maintain minimum 150mm above finished grade.

3.1.2 Concealed Foundations are recommended for buildings on sloping sites and for multi-story buildings and are normally required for Air Force structures pursuant to MIL-HDBK 1190. For buildings with concealed foundations, recommend masonry be stepped a minimum of one standard brick course below grade lines of foundation. Weep holes in cavity walls should be set two bricks courses above finish grade. The space in back of the facing below the weep holes and finished floor line will be filled with mortar and sloped to drain.

3.1.3 Perimeter insulation will be provided in accordance with MIL-HDBK 1190 for Air Force projects and in accordance with TI 800-01 for other projects.

3.1.4 Crawl Space Criteria:

3.1.4.1 Provision of crawl space will be limited to dental clinics, institutional portions of medical facilities as required for servicing utilities, kitchen areas of dining facilities, and other spaces where utilities beneath first

floor are numerous. Crawl space will be provided only where required to service utilities unless reduction of required fill offsets cost of crawl space. Crawl spaces may also be economical in areas of expansive soils. For requirements, refer SWD-AEIM to Structural Chapter.

3.1.4.2 Height will be adequate to facilitate form construction and removal by the contractor. A minimum clearance of 1.2 meter between ground and under floor surface and 460mm minimum between ground and lowest structural framing members should be maintained.

3.1.4.3 Access will be provided by a minimum of two internal entry points, one preferably from the mechanical room.

3.1.4.4 Ventilation will consist of a minimum of four vents placed high near corners of the foundation for cross ventilation. Vents will have sufficient opening to meet requirements of MIL-HDBK 1190 for Air Force projects and ASHRAE Handbook of Fundamentals, Chapter 23, for other projects. Vents may be placed on one side of the building in the crawl space if mechanically exhausted from the opposite side. Fixed vents will be specified. Specify non-ferrous vents with non-ferrous screens and hardware cloth.

3.1.4.5 Electrical provisions will consist of one or more porcelain base lights switched at point of entry and grounding type receptacles as required. Receptacles will have ground-fault protection.

3.1.4.6 Non-accessible Under-floor Space for supported floors, where crawl spaces are not required to service utilities, use precast concrete over 150mm voids or poured-in-place concrete over 150mm cardboard carton forms. These spaces are not required to be ventilated or insulated.

3.2 **Architectural Concrete Wall Systems** are composed of a specialized air entrained concrete with low slump and high aggregate ratio requiring close attention to design and construction procedures as follows:

3.2.1 References:

Architectural Precast Concrete by Precast/Prestressed Concrete Institute, 2nd edition, 1989.
Guide Specification, CEGS-03330, Cast-In-Place Architectural Concrete.

Guide Specification CEGS-03413, Precast Architectural Concrete
American Concrete Institute Publications 315 and 318.

3.2.2 Construction Systems utilizing architectural concrete are basically cast-in-place, precast and tilt-up construction. These systems have variable quality and economic interrelationships as described below that require system analysis before selection for:

Project Type
Size of Panel
Location and Transport
Type of Insulation
Level of Finish Quality

3.2.3 Cast-in-place systems are advantageous for remote project locations and require a high degree of detailing and specified field control for forming and finishing.

3.2.4 Precast systems are advantageous for general building construction where factory controlled curing can be utilized to achieve close tolerance, minimum warpage and a uniform high quality finish.

3.2.5 Tilt-up systems are advantageous where site-casting and repetitive forming can affect economic benefits.

3.3 **Material selection** should be based upon proven design mixes and correlated with the skill of available concrete contractors. Aggregates will be specified within an economical distance of the project and in sufficient stock for future construction.

3.4 **Finishes** will be selected which are economically reasonable and which can be practically achieved with uniform quality through the available field supervision. References above provide a number of acceptable finishes for selection that will be established as follows:

3.4.1 Textures will be correlated to the scale and visual distance to the construction. Basically, sack rubbed, light abrasive sand-blast or vertically brushed types of finishes are recommended, both for economy and to facilitate clean-up of laitance, efflorescence and form release agents. Exposed aggregate and heavier sand blasted finishes are more expensive, generally require gap-graded mixes and are suitable for more publicly exposed structures. Distressed textures

such as bush-hammered surfaces, due to higher cost, are only recommended for special accent areas and to eliminate unsatisfactory surface variations. When both poured-in-place and precast or tilt-up construction are used in combination, specify separate finish textures for each type of construction.

3.4.2 Pattern selections should be based on the need to strengthen visual or feature effect. Patterns should be achieved with simple forming techniques such as for vertical ribbed or grooved surfaces. Finite patterns such as wood grain effects require excessive control and have limited value except for visually immediate surfaces.

3.4.3 Color will be obtained with graded natural aggregate or by the use of inorganic integral compounds. Light earth tones are generally preferred to natural gray concrete. A one-color variable mix in exposed aggregate is desirable for viability and/or to extend the supply of aggregates for future construction.

3.5 **Sizes and shapes of castings** will be carefully coordinated with available contractor capabilities in order to facilitate constructability and effect economy. Dimensions will be confirmed by at least two contractors/manufacturers to establish size limitations and handling capabilities in relation to conventional transport handling and erection procedures. Size and shapes should additionally be developed which permit conventional formwork to serve with adequate rigidity and strength. Shape of cast forms will be carefully coordinated for each architectural concrete system. Where practicable, odd size units will come from a portion of a typical unit so that they can be cast from the same form. Components will be designed in order that formwork is readily removable without impact, shock or damage to the concrete. Castings will juncture at architectural lines, construction joints, vertical control joints, and other joint alignments. Complex shapes, offsets or projections in more than one plane and precast sizes greater than 3.5 meter wide and/or 10.5 meter long will generally be avoided where transportation on highways or railways is required.

3.6 **Insulation Systems**. Insulation may be internally or externally applied. Internally applied insulation is more costly and requires careful structural reinforcement coordination and economic analysis.

3.7 **Detailing** accuracy and precision are critical to attaining architectural quality. The design documents should include only those details necessary to establish the general design and to facilitate responsive engineering and construction by the contractor and to maintain quality control.

3.7.1 Joint articulation for cast-in-place concrete is recommended as a primary means of architectural control since it is difficult to eliminate form joint leakage and resultant discoloration of concrete surfaces. Evenly reinforced concrete will normally develop cracks 3 to 4.5 meter apart. Fast setting concrete and initial shrinkage in dry regions, make construction joint spacing more critical. V-joints, grooves or other rustication will be developed at all changes in construction procedure or placement. Architectural lines, construction joints, vertical control joints, and other joint alignments and placements will be correlated and provided with joint rustication. Butt joints will be avoided or placed at rustication wherever practicable. Where butt joints are necessary for existing construction, concrete placement and form taping will be carefully specified. Normally, lift placement lines may be controlled by use of a concrete mix retarder; however, changes in strength of concrete in one plane should be controlled by articulation. Rustication, grooves and ribs will be designed at minimum 12-l5 degree angles and 40mm or greater widths to simplify forming and form removal. Corner joints will be chamfered and specifications shall require them to be sealed. Horizontal joints between precast or tilt-up panels will be placed at least 25mm below floor lines for moisture protection except for shops and industrial type structures.

3.7.2 Formwork planning, related detailing and specifications will be coordinated with available contractor capabilities to facilitate concrete placement and constructability (References provide guidance). Types of forms that permit high re-use are recommended for overall economy and to facilitate field control. Deflection of formwork under load of wet concrete (not to exceed 1/240 of clear span) will be considered in determining economy of construction. Additionally, it is a good practice to specify 6mm camber in exposed beams for each 3 meters of length in order to compensate for illusory or optical deflection. Form ties will be evenly placed. Reinforcement detailing and placement including concrete protection for steel reinforcement will conform to ACI 315 and 3l8. Size of bars and coverage clearances will be carefully coordinated to assure adequate thickness for placement,

vibrator control, support systems and chairs. A 50mm minimum concrete cover for reinforcement is recommended. In some panels it may be necessary to galvanize the reinforcing steel when the concrete cover provided is low to ensure rust stains do not occur. In no case will metal coverage be less than 40mm and the minimum coverage will be increased to 80mm where exposed to salt-air or corrosive conditions.

3.7.3 Specifications for architectural concrete will be prepared to explicitly establish responsibilities for concrete engineering and quality control as follows:

3.7.3.1 Finish specifications will include requirement for both exposed-to-view and unexposed surfaces. The specifications will normally require that architectural precast system components be factory cast and cured under controlled conditions. A petrographic analysis requirement citing limitations for deleterious materials and fracturing will be included for projects with significant amounts of exposed aggregate architectural concrete work.

3.7.3.2 Placement procedures for cast-in-place concrete will be addressed and shop drawings required for form-work and reinforcing steel. The control measures for placing cast-in-place concrete will be established and checked in the project specifications. Architectural concrete will normally be placed in level lifts not more than 400mm in depth. The control measures for placement will avoid segregation and sloping lift lines. In coastal areas and Fort Hood eastward, precast and tilt-up anchorage and connections will be specified to be stainless steel, galvanized or cadmium plated.

3.7.3.3 Samples of architectural concrete work will be required similar to requirements of Reference Guide Specification. Portable size samples of precast work showing finishes and special joint conditions will be specified for comparison with A-E design samples on file in the resident and/or District office. Cast-in-place and tilt-up samples will be cast in suitable locations for visual inspection and may be utilized for project signage and screening as appropriate. A detailed report itemizing the procedure and quality control for each sample will be required to be submitted to the Contracting Officer for approval by the construction contract specifications.

4. **MASONRY**.

4.1 **Reference**:

TM 5-809-3, Masonry Structural Design for Buildings.
TM TI 809-4, Seismic Design for Buildings.
CEGS-07600, Sheet Metal Work, General.
AEIM Chapter VI -Structural.

4.2 **Foundation Details** for masonry per paragraph 3.1 above.

4.3 **Masonry Units** will be standard size, mixed light colored units or shall match existing construction. Exterior brick will normally be grade SW, color mixed, smooth or veloured textured units. Sizes, colors, and textures proposed for a project will be explained in the concept or preliminary design analysis or otherwise presented for specific approval action. Bullnose units will be used at vertical corners as necessary to minimize chipping.

4.4 **Coursing of masonry** will be arranged to eliminate cutting of masonry at heads and jambs of openings. Base units of 150mm (6 inches) nominal height are recommended for proper coursing with weather sill step foundations and standard size door openings. CMU units used as backup for resilient base material will be noted on the drawings as "trowel smooth with grout."

4.5 **Openings in masonry wall systems** will be detailed with weatherproof heads and sills. Sills will be sloped or stepped to the exterior to promote drainage and prevent seepage through the wall. Flashings will be detailed to conform to Guide Specifications.

4.6 **Corner Guards** of stainless steel will be specified for protection of masonry at service entries and other locations subject to impact.

4.7 **Masonry parapet construction** will be limited insofar as practicable to large buildings, roofs of over 18 meter span and as required for fire separation, safety or to void distraction of roof-mounted equipment. Parapets will be of minimum height and designed with metal covers or precast concrete coping protection.

4.8 **Masonry Screen Walls** utilized to void distracting elements from view will be perforated for maximum ventilation,

with drainage details at the base and sections coordinated with structural design.

4.9 **Masonry Copings/Caps**. Masonry walls and parapets will be designed with appropriate metal or precast copings. Masonry coping/caps will not be used due to inherent moisture penetration and expansion problems.

4.10 **Exterior Wall Systems** with painted or stucco finishes, precast, cast-in-place or tilt-up concrete walls, and non-load bearing steel stud walls with brick veneer are structurally acceptable. See AEIM Chapter IV-Structural for additional guidance. Special regional criteria applicable to masonry and veneer construction as follows:

4.10.1 Single Wythe Walls will be limited to those structures without finished interior wall surfaces such as shops and utility buildings or spaces. Single wythe CMU walls must be painted with a cement emulsion filler (TT-P-0035) applied with a stiff bristle brush and one or more coats of textured exterior coating for CMU (TT-C-555B, Type II). Silicone, siloxane and other clear coatings are not an acceptable solution to moisture proofing these walls as they deteriorate rapidly from non-uniform application and solar conditions. SWD AEIM Structural Chapter and TI 809-4 referenced above present seismic requirements.

4.10.2 Double Wythe Walls or separate veneer walls are standard for finished buildings and administrative space. Serious moisture penetration problems have been experienced in buildings having composite brick-CMU and single wythe split-face CMU exterior walls. When buildings are subjected to driving rains, moisture penetrates composite and split-face CMU walls and parapets with resultant damage to ceilings and interior wall finishes. Based on regional experience, brick-CMU composite wall construction and unpainted single wythe split-face/rib CMU wall systems will not be used in SWD. When brick facing or exposed split-face/rib CMU walls are required, a properly designed cavity wall will be used. The cavity will be have a minimum width of 50mm with a maximum of 75mm. Prior approval is required for cavities over 75mm wide. A 20mm air space is necessary for full insulation value of the cavity and a 50mm minimum cavity is necessary to facilitate construction of a clear cavity.

4.10.2.1 Cavity Wall Insulation. Insulation will be placed on the inner wythe to achieve "U" value cited in TI 800-01. Insulation in cavities will be impervious (extruded) rigid

board type. Insulation may be placed in CMU cells but loose fill insulation board in cavities will have to be applied in 406mm (16") horizontal strips between the horizontal joint reinforcement or cavity wall ties.

4.10.2.2 Cavity Wall Dampproofing. Dampproofing will be provided on the exterior face of the inner wythe for all cavity walls designed for Arkansas, Louisiana, and the eastern half of Texas including the San Antonio, Fort Hood and Dallas-Fort Worth areas. Additionally, dampproofing will be provided on the exterior face of the inner wythe of all cavities containing rigid insulation board.

4.10.2.3 Masonry Reinforcing will be specified to be corrosion-resistant and kept clean of dampproofing. Insulated cavities require reinforcement types which permit movement caused by differential temperatures of each wythe. Reinforcing will be coordinated with Structural Chapter.

4.10.2.4 Cavity Wall Construction. For cavity walls requiring dampproofing, the inner wythe will be constructed and dampproofed preceding construction of the outer wythe. Cavities will be kept clean of mortar droppings and other foreign materials during construction of the outer wythe to prevent cavity bridging and weep hole blockage.

4.10.2.5 Specifications. The following Guide Specs will be edited in accordance with the requirements above:

CEGS-04200, Masonry
CEGS-04220, Nonbearing Masonry Veneer/Steel Stud Walls

4.11 **Control Joints and Expansion Joints** will be in accordance with TM-5-809-3/AFM 88-3, Chapter 3. Joint locations will be established by the designer and reinforcement placement and cut-offs will be closely coordinated with structural engineering.

5. **METALS**. Material Selections and finishes for metal products require special design and specifications attention for corrosive and coastal areas east of Fort Hood, Texas. The use of aluminum, heavier anodizes or protective coatings and stainless steel materials are preferable in these locations. The use of dissimilar metals in contact will be avoided. Where multiple metal components are exposed-to-view such as flashings, door and window systems, they will be a correlated finish, texture and color. Steel joists and accessories

utilized for under-floor moist spaces will be specified to be cleaned and shop painted in accordance with guide specification "Notes" in all areas east of San Antonio, Texas and Fort Sill, Oklahoma. Refer to material paragraphs of this chapter for additional guidance.

6. **WOODS**.

6.1 **Use of wood products** is generally limited by type of construction require to comply with Uniform Building Code requirements and project criteria. Additionally selection of wood products is limited by flame spread and smoke contribution factors imposed by TI 800-01. In certain building types heavy timber or laminated construction is permitted however, these materials will not be exposed to weather in arid areas. TI 800-01 permits laminated wood bents as acceptable components of Type II-N Construction. Wood materials exposed to moisture such as roof fascia and nailers will be noted and specified to be of weather-resistant species.

6.2 **Finish Selection for interior** wood products such as casework, cabinets and furnishings will be coordinated in the specifications and samples of desired finishes will be furnished with Color Board submittals. Generally, finishes will be specified as "non-glare satin finish."

7. **THERMAL AND MOISTURE PROTECTION**.

7.1 **Roofing Systems**.

7.1.1 Reference:

TM 5-805-14, Roofing and Waterproffing.
Guide Specifications.
MIL-HDBK 1190.
AFR 9l-36.
Architectural Sheet Metal Manual.

7.1.2 Roof Slopes. Conform with criteria stated in CEGS Guide Specifications or FW-07502 (Air Force) as applicable. Basic policy is to design roof slope in the structural frame rather than the roof deck insofar as practicable. Structural deflection will be designed to assure that positive drainage is maintained to eliminate ponding. Flat valleys between drains are unacceptable. Requests for approval of slopes less than stated in the criteria will be forwarded separately to the District Technical Leader.

7.1.3 Roof Decking. Due to inherent drying problems, cast-in-place decking is not recommended for insulation purposes and generally will not be used in coastal areas and the area east of Fort Hood, Texas. When fills are used to obtain roof slope, regular or lightweight concrete will be used. Specify 21 MPa (3000 psi) concrete for fill over metal decks and 21 MPa (3000 psi) lightweight concrete for fill over concrete decks. Roof fills will not exceed 200mm maximum depth and will be 20mm minimum depth over concrete deck and 40mm minimum depth over metal deck at roof drains. For further guidance on roof decking systems, refer to Guide Specifications.

7.1.4 Metal Roofing. The requirements of the structure, materials, manufacturers and criteria provide the minimum roof slope along with the allowable number of slopes for design of the projects. The A-E will select roof slopes that are within the range of those normally furnished by metal roof manufacturers. Refer to Guide Specifications.

7.1.4.1 Standard Metal Roof Panels (corrugated type, lap type, and snap seam standing rib type will have a minimum design slope of 1 vertical to 8 horizontal).

7.1.4.2 Standing Seam Metal Roof (SSMR). Standing rib-mechanically field crimped metal roof panels will be used for high wind and air turbulence conditions and will have a minimum design slope of 1 vertical to 48 horizontal, except in highly corrosive environments where the minimum slope will be 1 vertical to 24 horizontal. All fasteners for standing seam roofs will be concealed type. Aluminum roofing will be specified only in hail-free, User approved locations. Structural metal roof systems will be specified in accordance with guide specification CEGS-07416, Structural Standing Seam Metal (SSMR) Roof System and Non-Structural Metal Roofing in accordance with CEGS 07412.

7.1.5 Roof Insulation and Ventilation. Placement of insulation above the roof deck is recommended pursuant to the following conditions:

7.1.5.1 Ventilation. Roof insulation details, drawings and specifications will include requirements for ventilation of poured in place roof decks. Refer to District Standard Details.

7.1.5.2 Insulation Materials specifications for roofs with foot traffic or in areas of high humidity (coastal areas and

areas east of Fort Hood, Texas) will include only those types of insulation with a minimum compressive strength of 140 kPa (20 psi) at 5 percent consolidation and/or having no capillary action.

7.1.5.3 Insulation Placement will be on top of deck or on top of suspended ceiling. However, both insulation types will not be used on the same roof assembly nor should part of insulation be on top of deck and part on top of ceiling to obtain the required U factor. Batt-type ceiling insulation will not be utilized for dust-free conditions or over medical spaces. Spaces between ceiling insulation and roof structure will be vented with weatherproof louvers or soffit vents as required by the Uniform Building Code.

7.1.5.4 Vapor Barriers are not normally required within this Division except for high interior humidity conditions and northerly installations. Metal decks are considered to serve as vapor barriers.

7.1.6 Roof Surfacing Aggregate surfaced asphalt built-up roofs in accordance with Guide Specifications are basic design; however, other types of roofing should be evaluated pursuant to project design conditions. Asphalt bitumen Types I, I and III that establish minimum-softening points will be designated in the project specifications in accordance with the project roof slope and manufacturers recommendations for the project location. The higher classifications are normally needed for Division installations. Coal tar pitch will be specified only for pitch pockets due to its low viscosity. Light colored opaque aggregates will be specified where available for heat reflectance and to avoid glare.

7.1.7 Strip Shingles are most practical for short span roofs and housing. A Class A glass fiber shingle of 15 kg/m^2 (100 lb/100 square foot) minimum weight with 25 year minimum warranty will be specified to meet wind and hail conditions prevalent in the Southwestern Division.

7.1.8 Roof Flashing. Set roof flashing abutting vertical surfaces into reglets. Reglets will be specified to be cast in concrete or masonry and to have lead plugs for holding flashing. Surface-applied and butt-type flashing is not approved for new construction. The normal 200mm minimum height for base flashing should be adequate, however, in locations subject to hurricane effects (Fort Polk, LA, San Antonio, TX, and southward) on roofs greater than 3,700 square meter, base flashing at roof periphery and expansion joints

should be set up to 400mm high to prevent water surge actions across the roof. To emphasize the avoidance of field cutting, internal and external corner flashing and intermediate and end cover plates will be noted as "shop-formed" on the drawings. The thickness of special shapes, sills and closures are not covered in the specifications and will be detailed and noted on the drawings for positive field control. The thickness of roof material items will be the same as base flashing except sill extrusions will be noted 4mm (1/8 or 0.125-inch) thick. The galvanized steel flashing option will not be specified east of San Antonio. For additional guidance refer to Guide Specifications and Architectural Sheet Metal Manual (SMACNA).

7.1.9 Roof Drainage. Generally a perimeter drainage system of gutters and downspouts will be provided. Storm runoff from roofed areas will not be permitted to fall from the roof perimeter directly onto erodible soils. Pitched roofs with exterior gutters and downspouts are recommended for roof spans to 18 meter. Interior gutters will not be utilized over finished spaces. For roof spans greater than 18 meter, assure positive drainage to interior roof drains so that no flat valleys or ponding conditions exist. Refer to District Standard Details. For Fort Polk and areas of high rainfall with silt soil conditions, design gutter, downspout and storm drainage systems so that drainage is dispensed with minimum erosion effect. For roofs less than 18-meter span, exterior gutter and downspout systems are mandatory and built-up roofing surface should not be used. For additional roof drainage guidance refer to Civil Chapter II.

7.1.10 Roof Mounted Equipment. Avoid use of roof mounted equipment where practicable and provide protective walkway for roof access as required. Roof penetrations will be minimized and roof mounted equipment will be grouped and screened as practicable to avoid visual distraction. Roof equipment will be mounted on continuous curbs to facilitate reroofing. Where solar collectors are required to be mounted on the roof, minimize roof penetrations, arrange and mount to allow for roof surface replacement.

7.1.11 Roof Parapets/Penetrations will be minimized insofar as practicable and sealed or otherwise waterproofed with built-up base and metal cap flashing. The use of pitch pockets will be confined to non-uniform shapes (angles, etc.) roof penetrations. Where penetrations are uniform (pipes, tubes), utilize bell cap flashing, fasteners and premanufactured neoprene flashing as applicable. The AE should request from the District project Technical Leader a

copy of their standard roofing details for venting and detailing of parapets/penetrations.

7.1.12 Roof Scuttles and interior access ladders (usually located in a mechanical equipment room) will be provided for flat (or low slope) roof structures over three stories high, over 6 meter high, or when mechanical equipment requiring maintenance is located on the roof. In the case of roof mounted mechanical equipment on a built-up roof, walkways will be provided between the roof scuttle and the equipment and also around the equipment as necessary for maintenance and to prevent damage to the roof from foot traffic.

7.2 **Caulking and Sealants** for all openings and penetrations will be specified in accordance with Guide Specification CEGS-07900 and detailed and noted in accordance with TM 5-805-6/AFM 88-4. It is important to differentiate sealant terminology particularly at joints of high expansion and metal contact.

7.3 **Waterproof Membranes** when required will be applied to the water source side of building assemblies in order to prevent water penetration and to protect insulation. Waterproof Membranes of 3-plys will be detailed and specified for toilet space and other wet areas over inhabited spaces. Non-ferrous pans will be provided for showers with ceramic floors over inhabited spaces. Toilets and other wet/noisy spaces in multi-story facilities will be stacked insofar as practicable for economy and utility. For additional data refer to Guide Specifications.

7.4 **Insulation**.

7.4.1 Specification Options will be carefully selected as specified to meet TI 800-01 and MIL-HDBK 1190, for flame spread and smoke development limitations. Due to numerous fire and toxic hazards with these products, specifications will be carefully prepared to assure proper protective cover and vapor barriers to obtain the correct products for construction. Thickness of insulation will only be shown for interface of existing projects. Renovation projects will state R-value to meet project design requirements. Insulation thicknesses for new construction are variable for individual assembly options and will be governed by U-value requirements cited in TI 800-01. The amount of weather protection required by these criteria is related to type of construction (heated, unheated) and weather zones.

7.4.2 Under-floor Insulation will be provided to meet U-value criteria in TI 800-01. Insulation will be non-combustible board, mechanically fastened to the under-floor and of a thickness that will give an average overall floor U-value that meets the above criteria. Under-floor insulation may be omitted if an analysis at the concept or preliminary stage indicates that:

- the quantity of energy that can be reclaimed from exhaust air, by a system utilizing energy transfer devices such as heat wheels, does not justify the added cost provided the system;

- a sufficient quantity of non-contaminated continuous exhaust air is available and can be properly distributed in the crawl space to keep the heat transmission through the floor to no more than it would be if the floor were insulated to criteria and the crawl space cross-ventilated.

8. **DOORS AND WINDOWS**:

8.1 **Entries**.

8.1.1 Main Entries will be differentiated in elevation and will be oriented away from prevailing winter wind or otherwise recessed and/or provided with wind protection.

8.1.2 Vestibules/Foyers will be provided for Security Engineering Design and energy conservation in heated and air-conditioned buildings at main entries and other entries in continuous use. Use of storm doors will be avoided to facilitate exit from buildings and limit maintenance.

8.1.3 Soffits and Entry/Vestibule Ceilings subject to wind pressure uplift will be of solid material or detailed and specified with hold-down clips.

8.2 **Door Types**.

8.2.1 Interior Personnel Doors. Ordinarily, designers should specify hollow metal or paint grade wood doors for economy and ease of maintenance. Since military facilities are subject to heavy use/abuse, wood doors should be specified to be solid core wood block (stile and rail type or vertical glued block type with the stiles, rails, and panels bonded to each other). In instances where solid core wood composition or mineral cores are included in the specifications, the minimum

dimensions for stiles and rails to receive the hardware will be specified. All doors will have steel frames except family housing doors, smoke draft partitions, aluminum doors, and folding doors.

8.2.2 Interior Fire-Rated Doors.

8.2.2.1 Corridor Doors requiring 20 to 30 minutes ratings will be solid core wood block (with stiles, rails, and panels bonded to each other) or hollow metal doors with steel frames. Doors with 20 minute ratings do not require fire door labels, but certificates of ratings will be required by the specifications. Doors with 30 minute ratings require fire ratings in accordance with NFPA.

8.2.2.2 Fire Rated Doors of 3/4-hour or more will be specified UL labeled hollow metal doors with steel frames; door hardware will have the same fire rating as its door and frame. The use of wood fire doors 3/4-hour or more is not permitted due to recurring hardware mounting problems. Refer to NFPA-80 for fire rated door criteria. All fire and smoke rated doors will be indicated in the project door schedule.

8.2.3 Exterior and Shop Doors.

8.2.3.1 Hollow metal doors and steel frames will be used for security when low threat severity and low level of protection is required. When medium or high security is required, provide doors designed for blast resistance; see TM 5-853-1, TM 5-853-2, and TM 5-853-3.

8.2.3.2 Louvers will not normally be specified for exterior doors.

8.2.3.3 Bumpers with Hooks are required at Air Force installations and in high wind areas.

8.2.4 Heavy Duty Doors. When low threat severity and low level of protection is required, identify exterior doors such as service entrances, platform doors, dormitory exits from stairwells, and other high usage exterior doors where steel doors are used, as extra heavy duty doors. Detail and specify:

"Frames shall not be less than 150mm (6") channel as specified in CEGS-05500, Miscellaneous Metal, paragraph "Steel Door Frames."

Doors: Edit CEGS-08110, Steel Doors and Frames, to specify these doors "Extra Heavy Duty, Grade III, 1.6mm (16 GA) Steel. Hinges shall be 1 1/2 pair 115mm (4 1/2") half mortise, high frequency, and heavy weight steel, ball bearing hinges with non-rising pin. Hinges shall be welded to steel frame and welds shall be ground smooth. Where the plan of the area will allow, the door shall swing 180 degrees to wall mounted door holder, top and bottom. Lock, closer, weather-stripping, etc., shall be selected to be compatible with the above."

8.2.5 Folding Doors. Avoid use of wood or vinyl folding doors due to inherent maintenance, sound transmission and cost factors. When folding doors are functionally necessitated, a minimum sound transmission rating STC-38 will be specified to assure quality of the installation.

8.2.6 Mechanical Room Doors. Exterior access is a normal requirement for furnace/heaters/boiler rooms. Minimum size of 915mm (3 feet) by 2.15-meter (7 feet) single, non-rated metal doors will be specified for small buildings. Where equipment access size exceeds 915mm (3 feet), provide double metal doors with sufficient clearance to assure equipment access and service. Hardware will be coordinated and master keyed to Facility Engineer's requirements.

8.2.7 Music Room Listening Booth Doors. Include a small view window and a latch bolt only (no lock) operable from both sides by knob for each booth door.

8.2.8 Sound-Rated Doors will generally be specified for wall installations with a sound transmission exceeding STC-40. Solid wood core doors will be utilized for acoustically sensitive spaces requiring a moderate degree of speech privacy up to and including a requirement of STC-40. Doors will be well-fitted with no undercuts or ventilation louvers allowed. Doors at acoustically critical spaces requiring a confidential degree of speech privacy above STC-35 will be fully gasketed at heads and jambs with a highly compliant gasket material and the bottom edge of doors will be equipped with either an automatic drop seal or sweep seal device. Doors are usually the limiting elements in sound isolation and, therefore will be designed for sound transmission class as closely equivalent to the wall and ceiling systems as practicable. The following guide specification is recommended:

Sound-Rated Doors shown on the drawings shall be not less than sound transmission class (STC) indicated when determined in accordance with ASTM Recommended Practice, E

9O. Units shall include doors, frames, gasket, and seal devices. Units shall be gasketed at heads and jambs with impervious gasket materials such as vinyl, polyvinyl chloride or neoprene and the bottom edge of doors shall be equipped with either an automatic drop seal or sweep seal device. All gaskets shall be kept in the same plane wherever possible. Doors shall be ____ millimeter (____inches) thick. Metal frames shall be as specified in Section _____. The installed door shall be identical in construction to the door tested and in compliance with ASTM STD, 90-55. Certification of such compliance with foregoing requirements shall be furnished by the contractor."

8.2.9 Overhead Doors over 6 meter (20 feet) wide will be designed and specified for 1.5 kPa (30 psf) wind load. Specify the following:

(1) Electrically operated
(2) Bottom bar with electric sensor safety device
(3) 1.3mm (18 gage) slats
(4) Roller wind-locks spaced every other slat

8.2.10 Hangar Door criteria are stated in MIL-HDBK 1190. The design and specifications for these doors require close attention to framing, door and operational equipment phases of the installation and coordination between subcontractors. Therefore, assure that fabrication components such as rails, ancillary steel, mechanical and electrical operators, etc., are specified to receive proper quality control and field approval.

8.3 **Door Details**. Doors will be detailed for stock-sizes insofar as practicable. Doors with frames set in masonry will be sized to course with the masonry to limit cutting of masonry. Joints between masonry and frame shall be one-half of the masonry coursing joint. Example - 10mm (3/8-inch) coursing will require 5mm (3/16-inch) caulking joint.

8.4 **Weather stripping** will be specified for all doors in accordance with Guide Specifications.

8.5 **Door Numbers**. Each door shown on the drawings will have a separate door number.

8.6 **Door Schedule**. An architectural door schedule similar to that described in the Drafting Chapter will be utilized to coordinate doors, door frames, head, jamb and sill details, hardware, etc.

8.7 **Window Systems**

8.7.1 Window Selection. Anodized aluminum windows will be specified without option for San Antonio and eastward areas of high humidity and coastal locations subject to corrosive conditions for low security threat severity and low level of protection design conditions. Sliding windows will be utilized only in non-arid, dust storm free areas. Recommend selection of light colored aluminum surfaces to avoid expansion/contraction, high surface temperatures and weathering of seals. In designing housing and domiciliary buildings, specify clear glass, double hung, aluminum windows to satisfy function, ventilation and low maintenance requirements. Single hung windows are acceptable in air-conditioned buildings. When other than low security threat severity and level of protection is required see TM 5-809-1, TM 5-809-2, and TM 5-809-3.

8.7.2 Window Details. Use stock size windows insofar as practicable. To achieve maximum functional value, glazing should allow for viewing while seated and/or standing and, therefore, is recommended to be maintained at 70mm or more above finished floor for safety, energy conservation and reduced maintenance. Window and opening sizes shall conform to security requirements in TM 5-809-1, TM 5-809-2, and TM 5-809-3. Window and opening sizes will meet minimum NFPA 101 Life Safety Code exit requirements, except when security design measures require otherwise. Glazing and/or doors will be provided in walls at adequate intervals for fire fighting access. Refer to NFPA-80 for criteria.

8.7.3 Window Screens are normally required for operable windows and will be confirmed with the user and local conditions. Screen hardware will be detailed and specified for heavy use and to facilitate removal and replacement. Shade screening may be specified when justified by a reduction in energy consumption. Shade screening alone will not meet the requirements of AR 420-70 for insect screening. The maximum dimension specified in the AR is intended to apply to both dimensions of the screen grid.

8.7.4 Glazing Systems will be selected for security and energy conservation. Reflective fragment retention film on conventional glass is required by security engineering criteria. Acrylic and polycarbonate options will be specified for maintenance facilities and for Reserve Centers or buildings where vandalism is a problem. Plastic glazing will

not be utilized in place of bars or where security is a design factor.

8.7.5 Storm Window utilization will be minimal. Storm sash and double glazing will be considered only for those individual exposures where life cycle costs indicate economic feasibility.

8.8 **Hardware**. Reference:

CEGS - O8700, Builders Hardware.
TM 5-805-8, Builders Hardware.
MIL-HDBK 1190.

8.8.1 Hardware and Keying Systems will be coordinated with Using Services to designate and specify hardware for both security and minimal maintenance. Personnel receiving special requirements from the User for hardware, keying and master keying will establish that the criteria conform to above references. When lockset and interchangeable cylinder systems are specified, the interchangeable cylinder will be specified to "fit the lockset without adapters." Project hardware requirements for Air Force installations and specific instructions will be furnished in design instructions and project programs. Stainless steel hardware may be specified in highly corrosive coastal areas and east of Fort Hood, Texas. A consolidated list of Army and Air Force installations with their respective keying systems is shown in CEGS - 08700.

8.8.2 Hardware Schedule: An architectural door schedule accompanying the door details included in the architectural drawings will be used to coordinate doors with hardware sets specified in the BUILDERS HARDWARE specifications section.

9. **FINISHES**.

9.1 **Lath and Plaster**:

9.1.1 Stucco. Portland cement surfaces will have control joints detailed and spaced not greater than 3 meter with a maximum area of 9 square meter. Corner soffit joints will be detailed so as to occur parallel to walls.

9.1.2 High Strength Gypsum Plaster is recommended for interior damp areas in preference to Portland cement or Keene's cement plasters. Keene's cement may be utilized for

kitchen spaces subject to cleaning when properly detailed to avoid cracking.

9.2 **Gypsum Wall Board**:

9.2.1 Control Joints are necessary to accommodate stresses developing within construction material membranes such as partitions and ceilings. Control Joints are intended to accommodate tensile and compressive movements in the membranes due to hygrometric, thermal and structural causes. These control joints will not accommodate shear movement normally encountered in racking. Such movement requires proper detailing of the perimeter interfacings. In ceilings and partitions, separate construction framing will be used on each side of the control joint. Control joints will be positioned to intersect light fixtures, heating vents, air diffusers, and other areas of stress concentration as practicable.

9.2.1.1 Recommendations for control joints and perimeter relief: Gypsum construction surfaces should be isolated with control joints where:

- partitions or ceilings of dissimilar construction meet and remain in the same plane;

- ceilings are perforated by a vertical penetration by positioning control joints to intersect the openings;

- wings of "L", "U" and "T"-shaped ceiling areas are joined;

- expansion or control joints occur in the base wall construction and/or building structure;
- surfaces exceed dimensions shown in the following table.

Recommended control joint spacing:

- Partitions and Ceiling space --- 9 meter maximum (5 meter vertical)
- Partitions and Ceilings in High Humidity/Expansive Soil --- 5 meter maximum in either direction.

- Door frames may be used as control joints, if control joints extend to ceiling from both corners.

9.2.1.2 Perimeter relief will be detailed for gypsum construction surfaces where:

- Partition or furring abuts a structural element (except floor) or dissimilar wall or ceiling;

- Ceiling abuts a structural element, dissimilar partition or other vertical penetration;

- Ceiling dimensions exceed 9 meter in either direction.

9.2.2 Specification CEGS-09250, Gypsum Wallboard, will include the following as applicable in accordance with paragraph above:

"Control Joints shall be installed in partitions and furred walls at a maximum spacing of 5 meter to 9 meter in the horizontal, 5 meter in the vertical direction, and at all control joints in exterior walls. Joints shall be located at door or window openings where convenient to obtain the required spacing. Control joints shall be installed at all locations where the backing or support for gypsum board changes material or type of construction. Provide a 0.7mm (24-gage) angle closure trim at edge of gypsum board surfaces abutting masonry walls. Large ceiling areas shall have control joints spaced at maximum 9-meter o.c. in either direction. Control joint material shall meet the requirements of the fire rated wall on which it is installed. Fire-rated control joints shall be installed in accordance with standard details and manufacturer's recommendations."

9.2.3 Water-Resistant Gypsum Wall Board may be utilized as a base for adhesive application of ceramic tile. This material will not be used for exterior locations such as soffits. For interior spaces, it will not be used for showers and ceilings or interior areas subject to sustained high humidity and moisture.

9.3 **Paints and Protective Coatings** are covered by Guide Specification - CEGS-09910 and TM 5-618/AFM 85-3. Semi-gloss paint selections are recommended to minimize maintenance in corridors, hallways and spaces subject to soiling.

9.4 **Carpet authorizations** and selection approvals will be obtained as early as practicable to facilitate preparation of interior design. MIL-HDBK 1190, project criteria or other interior design criteria define carpet requirements for the

facility. The AE should verify that sufficient requirements on the use of carpet have been provided or ask for clarification from the District Technical Leader. In certain arid areas or under high maintenance conditions, there are minimal requirements for carpeting. Therefore, project instructions will be coordinated with the installation's policies and confirmed by the User. Where significant repetitive quantities of carpeting are required, General Services Administration procurements will be coordinated and established for cost control. CEGS 09680, Carpet, will be used in specifying carpet.

10. **SPECIALTIES**:

10.1 **Signage**, both exterior and interior, will be coordinated with the user and developed as an integral part of the design for architectural control. Exterior signs will be scaled respective to the primary viewpoint and developed for minimal maintenance and vandalism. Interior signage will be coordinated with installation requirements to establish a minimum maintenance, interchangeable system. Color coding is an important consideration for complex and medical facilities. Directory Boards for significant buildings will be coordinated with the Using Service. For Air Force projects refer to AFP 88-40 signage design criteria.

10.2 **Wardrobe/Locker criteria** are furnished by engineering and design instructions and project criteria. Federal procurements are normally required for these products. However, construction procurement may be authorized for small quantities of special equipment. Floors and finishes behind wardrobes/lockers will be of uniform finish in order that flexible use of space may be made. Material options and locker sizes (single or double tier) require coordination and confirmation with the Using Service.

10.3 **Raised Floor Systems** design and specifications will be carefully coordinated with respect to equipment loads, vertical heights and cut out penetrations. Options listed in guide specifications will be coordinated with User and interface requirements of existing installations. Under-floor surface will be specified with hardener or sealed or painted with epoxy (Air Force) to minimize dusting and facilitate cleaning.

11. EQUIPMENT:

11.1 **Food Service layouts and equipment** selections require coordination with the Troop Support Agency (TSA-Fort Lee, VA) except for small kitchen facilities and non-appropriated funded projects. Layout and equipment data for Air Force projects will be furnished with design instructions and project criteria. Layouts will assure a sound circulation pattern and flexibility for equipment tolerances and change. Items of equipment to be contractor or government furnished and installed will be determined and clarified in the project documents as early as practicable. Additionally, it is important to coordinate electrical receptacle placements for equipment to avoid wet surfaces and maintain flexibility for equipment changes. Roof mounted equipment and/or roof penetrations will be avoided as practicable.

11.2 **Waste Handling Equipment/Transformer** will be located or screened to avoid air pollution, noise and visual distractions. Masonry screens will be of such height to screen the equipment from normal view and will be perforated for maximum air circulation and drainage.

12. **FURNISHINGS**:

12.1 **Furnishings Selection** will be analyzed from functional use, environmental conditions and economic first cost and maintenance. Division environmental conditions vary from humid to arid with high solar loads; therefore, selections will reflect design response to these conditions and practical tradition. Built-in furnishings and equipment will be detailed and specified to minimize sharp edges, corners and other safety hazards or cleaning problems. Reception counters and like furnishings will have rounded or beveled edges to benefit safety and cleaning. Selections shall comply with TI 800-01 flame spread and smoke development limitations.

12.2 **Sample Boards**. A minimum of two sample boards showing color and texture of both exterior and interior structural (building related) furnishings/finishes are required for use of the contracting officer and contractor. These are critical documents for architectural field control and will be made clear as to whether samples represent the actual material or are for color and texture only. Specifications will incorporate requirements for the contractor to submit coordinated sample boards of appearance related construction items. The sample boards submitted will show color, texture and finish of proposed material items consistent with the format of the A-E prepared sample boards on file with the COR.

12.3 **Colors**.

12.3.1 Reference:

FED Std. 595a.
TM 5-618/AFM 85-3, Paints and Protective Coatings.
MIL-HDBK 1190.

12.3.2 General. Federal Standard 595a will be used as a basic guide to select and specify exterior and interior colors. Accent and special colors may be selected and specified to match manufacturer's standard names and numbers.

13. **SPECIAL CONSTRUCTION**:

13.1 **Project Criteria** may reference special type construction such as industrial, pre-engineered and/or commercial standard design and construction. These type projects require coordination with installation standards, master plans and future construction. Additionally, they require economic analysis of site, foundation and procurement timing to assure overall beneficial economy.

13.2 **Commercial Standards** are recommended only if guide specifications are unavailable. Commercial standards require special development for implementation of quality control and construction approval of contractor submittals.

13.3 **Underground (Windowless) Structures** are sometimes cited for security purposes and may be appropriate for radiation and/or weather protection. These type structures are not recommended for facilities with high personnel occupancies or daylighting needs and are usually higher in unit cost due to structural, fire sprinkler and exit requirements. Openings 760mm wide and 15 meters on center are normally required for fire fighting access. When radiation protection is required, the number of personnel to be protected and the protection factor (PF) will be confirmed prior to determination of building type.

14. **CONVEYING SYSTEMS**:

14.1 **Elevator requirements** may be cited in program documents; however provision of elevator equipment is normally minimized due to structural and maintenance cost. When elevators are proposed, an economic analysis will be included with the design analysis as they effect the overall structure. Elevator access, timing sequence, finishes and architectural

lighting will be carefully coordinated between the design analysis and specifications.

14.2 **Hoist/Bridge crane equipment** is often required for government construction. It is important due to overall structural costs that the designer confirms the capacity of this equipment (kg or metric ton) for current criteria and future loads. Additionally, the critical horizontal and vertical working clearances will be confirmed and this data stated in the design analyses.

15. **MECHANICAL**:

15.1 **Plans and elevations** will be coordinated to indicate any exposed to view mechanical equipment for the initial concept or early preliminary submittal. Mechanical spaces will be sized to accommodate the most critical of three mechanical equipment options with adequate working clearances therefore.

15.2 **Fire Protection for Hazardous Spaces**:

15.2.1 Reference:

National Fire Protection Association
Life Safety Code l01.
TI 800-01.
MIL-HDBK 1190.
MIL-HDBK 1008C

15.2.2 Criteria References cite requirements for 1-hour or higher rated construction for corridors, stairwells, pipe and elevator shafts, hazardous spaces such as heater/boiler rooms, and storage areas containing combustible material. Application of these requirements has varied regarding height of surrounding rated partitions, ceiling construction, location of dampers, and rating of openings through the protected construction. The following criteria clarify features of such 1-hour protection:

15.2.2.1 Rated partitions will extend to the underside of the floor or roof deck to prevent flue-action fire hazards from openings unless rated ceilings (protected top and bottom) are detailed and specified. Openings from structural and mechanical penetrations will be detailed and specified to be closed or sealed with 15mm incombustible expansion joint material.

15.2.2.2 Rated ceiling assemblies (protected top and bottom) that will accommodate fire dampers may be utilized where closing mechanical penetrations of extended partitions is uneconomical and will be installed below all unprotected construction.

15.2.2.3 Fire damper assemblies provided at duct and other mechanical penetrations of the rated partitions or ceiling assemblies will be coordinated with mechanical design.

16. **ELECTRICAL**:

16.1 **Plans** will be coordinated to indicate any exposed to view electrical equipment for initial concept or early preliminary submittal. Electrical spaces will be maintained separate insofar as practicable with adequate working spaces. Internally located transformers will have sound rated walls for the specific equipment STC ratings and provided with adequate natural ventilation.

16.2 **Interior Architectural Lighting** should be specially selected and coordinated for main entries, lobbies, and display areas of publicly-used buildings. Feature, focal point and/or wash lighting may be used at major cross-corridor intersections, elevator lobbies, directory locations and other main circulation points as functionally necessary. The lighting layout and special fixtures and intensities shall be coordinated architecturally by reflected ceiling plans.

16.3 **Illuminated Exit Signs**. NFPA 101 requires exit signs to be readily visible. Faces of exit signs will be vertically mounted. They will not be "slanted" to increase vertical clearances. Faces of exit signs will be perpendicular or parallel to corridor walls. In those instances where it is necessary for exit sign faces to be other than perpendicular or parallel to the wall, the angle between the wall and the sign face should be between 90 and 135 degrees. Except where ceiling heights, functional necessity or specific criteria dictate otherwise, exit signs will be mounted at least 2.1 meters clear of the finished floor. Higher mountings will be provided where possible. Where the signs would infringe on the 2.1-meter vertical clearance, the following means of providing adequate clear space will be used, in descending order of preference:

(1) Flush Mounted signs.

(2) Surface mounted signs installed at ceiling-wall intersections and mounted to either the wall or ceiling, whichever provides the best support. Integral battery supply type fixtures will not be used for the application.

16.4 **Exterior Architectural Lighting** will be provided where functionally required for public entries, safe walkway access and for security. Fixture selection and location will provide for low maintenance, low consumption of energy (energy efficient) and minimal vandalism.

16.5 **Architectural Lighting Specifications** not included in guide specifications will be written for open competition by two or more manufacturers, or by listing three acceptable manufactured fixtures. Fixture placement will be specially detailed where specified fixtures interfere with required clearances.

APPENDIX A

FINAL DESIGN INTERDISCIPLINARY COORDINATION CHECKLIST

CIVIL

1. Access and entry conditions barrier-free to handicapped. Drainage and stairs arranged to prevent icing hazards. ____

2. Demolition: Identify walls, ceilings, doors, windows, finishes, and equipment as to type, material and extent of removal for estimating purposes including horizontal and vertical dimensions as applicable. Provide details for new and existing interface, patching and indicate items to be relocated from where to where. ____

ARCHITECTURAL

1. Legend and Symbol Sheet accurate for specific project. ____

2. Exterior equipment, landscaping and screening of utilities and distractions detailed and coordinated with specifications. ____

3. Section and detail cuts are complete for construction and identified with correct number and sheet where shown. ____

4. Types of materials and dimensions to coincide with plans and schedules. ____

5. Room Finish and Door Schedules coincide with design criteria, Floor and Fire plans. Acoustical and fire-rated assemblies coordinated. ____

6. Interior signs, directories, case/cabinet work and special furnishings coordinated between plans and specifications. ____

7. Terminology and material options on drawings consistent with specifications. Hardware and Paint Schedules in Specifications consistent with drawings. ____

STRUCTURAL

1. Security protective measures, vault and radiation classifications and details coordinated. ____

2. Control, construction and expansion joints coordinated in floor and ceiling plans, elevations, sections, and details. ____

3. Size and spacing of reinforcing steel and wall ties in masonry walls and at top of wall coordinated. Masonry units properly specified as to size, strength, texture, and color. ____

4. Provision of proper suspended ceiling systems and intermediate steel supports. Hold down clips for lay-in ceilings at entries and plenum spaces. ____

MECHANICAL

1. Equipment and door clearances adequate for maintenance and service. ____

2. Stacks, exhausts, battery room vents and air pollution located away from intakes and habitable spaces. ____

3. All wall and roof penetrations, louvers and vents weather-proofed and properly detailed. ____

4. Wall, floor and roof systems coordinated and detailed for fire dampers and fire safety of openings and penetrations. ____

5. Proper use of plenums in corridors per NFPA 90A and Mil-HDBK-1008. ____

6. Fire and Reflected Ceiling Plans coordinated for mechanical penetrations, diffusers and fire sprinkler locations. ____

7. Fire extinguisher cabinets, standpipes and drinking fountains full or semi-recessed, located for exit conditions and detailed. ____

ELECTRICAL

1. Exterior and Interior architectural lighting properly located and detailed. Reflected Ceiling Plans coordinated. ____

2. Electrical equipment, panels and transformer clearances and enclosures checked for fire safety and sound attenuation. ____

3. Electronic hardware items interfaced. ____

ARCHITECTURAL DESIGN REVIEW CHECKLIST

DESIGN ANALYSIS

*1. Facility area/capacity consistent with program scope ____

2. Project construction cost consistent with program amount. ____

3. Building classification (occupancy) confirms type of construction (fire resistance). ____

4. Analysis comprehensive with the AEIM format. ____

5. Economic justification of building systems/assemblies. ____

DRAWINGS

1. Drawings independently checked by AE. ____

*2. Project location/north, views and prevailing summer/winter wind shown. ____

*3. Master plan and future expansion capability coordinated. ____

*4. Visual features (existing/natural) indicated on/off site. ____

*5. Building massing in balance with paving and open space. ____

*6. Accessibility (primary, secondary, service and fire fighting) clear. ____

*7. Building configuration & height meets horizontal/vertical & noise zone clearances. (Airfields, code setbacks,etc.) ____

*8. Building orientation consistent with solar energy conservation. ____

*9. Exterior circulation and walkway interface efficient. ____

10. Landscape enhanced, exterior equipment and utility distractions coordinated. ____

*11. Space allocations consistent with occupancies (male, female and transient). ____

*12. Space arrangement/circulation efficient and flexible.____

13. Fire safety (hazards, area limits, separations and exits) ____

14. Barrier free, OSHA and protective shelter criteria met. ____

15. Floor system (thermal, fire, sound and weatherproofing) confirmed. ____

16. Wall system (thermal, fire, security, sound, and weatherproofing) confirmed. ____

17. Roof system (thermal, fire, security, sound, and weatherproofing) confirmed. ____

18. Conveyance system/special equipment/GFE coordinated. ____

19. Cubage/ceiling heights and assembly clearances economical. ____

20. Door system (clearances, unit widths, fire, security and sound ratings) confirmed. ____

21. Security/hardware and keying/vaults (fire and theft-IDS), antiterrorism security measures coordinated. ____

22. Window system/glazing/daylighting/shading fenestration meets criteria. ____

23. Interior design/finishes (features, accents, lighting) coordinated. ____

**24. Signage (interior and exterior) coordinated. ____

PROJECT SPECIFICATIONS

**1. Guide specifications tailored to regional/local/project conditions ____

2. Waivers for soul source procurement items. ____

**3. Terminology consistent between drawings and specifications ____

**4. Commercial specifications and short form list multiple options. ____

* PROJECT ENGINEERING/PROJECT DEFINITION ITEMS
** FINAL SUBMITTAL ITEMS

CHAPTER IV

STRUCTURAL

Table of Contents

1. PURPOSE OF CRITERIA
   1.1 Metrication

2. REFERENCES
   2.1 Publications of United States Government
   2.2 Construction Industry Codes and Specifications

3. REQUIREMENTS FOR PROJECT ENGINEERING PHASE/CODE 3 (ARMY) AND PROJECT DEFINITION (AIR FORCE) SUBMITTAL
   3.1 Structural Submittal

4. REQUIREMENTS FOR CONCEPT SUBMITTAL
   4.1 Structural Narrative
   4.2 Design Analysis
   4.3 Structural Drawings

5. REQUIREMENTS FOR FINAL SUBMITTAL
   5.1 Structural Narrative
   5.2 Design Analysis
   5.3 Structural Drawings
   5.4 Seismic Design

6. LOADINGS
   6.1 Minimum Design Loads & Load Case Combinations
   6.2 Load Combinations Concrete and Structural Steel
   6.3 Minimum Design Pressure for Interior Walls
   6.4 Wind Speed, Seismic Acceleration, Ground Snow Load

7. MATERIALS AND DESIGN CODES
   7.1 Concrete
   7.2 Steel
   7.3 Masonry

8. FOUNDATION DESIGN
   8.1 General
   8.2 Type of Foundation
   8.3 Design Loads

9. PIER AND BEAM FOUNDATIONS
   9.1 Grade Beam Design
   9.2 Drilled Pier Design
   9.3 Lateral Loads

Table of Contents (cont.)

10. RIBBED-MAT SLAB FOUNDATIONS
    10.1 General Requirements
    10.2 Design Requirements
    10.3 Additional Requirements
    10.4 Analytical Requirements
    10.5 Prestressed Designs
    10.6 Family Housing
    10.7 Moisture Control

11. FIRST FLOOR DESIGN
    11.1 Slab-on-Grade Floors
    11.2 Structurally Supported Floors

12. UPPER FLOOR DESIGN
    12.1 System Selection
    12.2 Upper Floors Used As Diaphragms

13. STOOPS, RAMPS AND PORCHES

14. BASEMENTS

15. WALLS AND PARTITIONS
    15.1 Lateral Loads
    15.2 Masonry Walls
    15.3 Steel Stud Walls and Partitions
    15.4 Precast Concrete Walls

16. BUILDING FRAMES
    16.1 General
    16.2 Concrete Frames
    16.3 Steel Frames
    16.4 Structural Steel Connections

17. ROOFS
    17.1 General
    17.2 Steel Roof Decks - Build Up or Single Ply Roofing
    17.3 Concrete Roof Decks
    17.4 Pitched Roofs
    17.5 Structural Standing Seam Metal Roof System

18. SHEAR DIAPHRAGM DESIGN
    18.1 Steel Deck Diaphragms
    18.2 Precast Concrete Diaphragms
    18.3 Shear Struts

Table of Contents (cont.)

19. SPECIAL DESIGN CONSIDERATIONS
- 19.1 Use of Light Cold Formed Steel framing
- 19.2 Expansive Soils Areas
- 19.3 Special Concrete Requirements
- 19.4 Seismic Provisions
- 19.5 Fallout Shelter Spaces
- 19.6 Aircraft Hangar Wind Loads
- 19.7 Monorail Design
- 19.8 Traveling Crane Runway Girders
- 19.9 Fire Walls
- 19.10 Antiterrorism/Force Protection

20. MISCELLANEOUS STRUCTURES
- 20.1 Manholes, Pullboxes, Surface Inlets, etc.
- 20.2 Headwalls
- 20.3 Transformer Pads and Condenser Pads
- 20.4 Retaining Walls/Earth Retaining Structures
- 20.5 Metal Building Systems
- 20.6 Storage Tank Foundations
- 20.7 Reinforced Box Culverts

21. ENGINEER OF RECORD

22. BASIC WIND SPEEDS, SEISMIC SPECTRIAL ACCELERATIONS, And GROUND SNOW LOADS

23. SEISMIC DESIGN ANALYSIS DESIGN AID

APPENDIX A - Plates of standard notes, tables and details.

APPENDIX B - Design Checklist - Structural

CHAPTER IV

STRUCTURAL

1. **PURPOSE OF CRITERIA**. The purpose of the following criteria is to facilitate the proper use of design criteria, to ensure that repetitive deficiencies in design will be eliminated, and to ensure that all aspects of structural design are properly covered. They are not intended to be rigidly restrictive except in the use of building codes, unit stresses and unit loads, and for special design considerations in expansive soils areas. The standard details shown herein may be revised if it can be shown that a different detail is more economical and/or will perform better.

1.1 **Metrication**. The metric units used are the International System of Units (SI) adopted by the U.S. Government as described in Chapter I, paragraphs 3. and 4.2.1.

1.1.1 Concrete Reinforcement. This document uses metric concrete reinforcement designations conforming to the ASTM A635M-98 SI system.

1.1.2 Masonry. Concrete masonry units (CMU) and clay brick manufactured to metric standards are not readily available in the Southwestern Division. New facilities are typically dimensioned in metric units that are modular with hard metric masonry products. In accordance with P.L. 104-289 the Contractor may use soft metric CMU and brick, equivalent to standard I-P CMU and brick during construction. Plans and specifications should make the Contractor responsible for changes in reinforcement detailed on P&S and all costs associated with use of CMU and brick manufactured to I-P units.

2. **REFERENCE**:

2.1 **Publications of United States Government**

2.1.1 TI 800-01, Design Criteria

2.1.2 TI 809-01, Load Assumptions for Buildings

2.1.3 TI 809-02, Structural Design Criteria for Buildings

2.1.4 TI 809-04, Seismic Design for Buildings

2.1.5 TI 809-05, Seismic Design for the Rehabilitation of buildings

2.1.6 TM 5-809-3(Future TI 809-6), Masonry Design for Buildings

2.1.7 TI 5-809-07, Design of Load Bearing Cold-Formed Steel Systems and Masonry Veneer/Steel Stud Walls

2.1.8 TM 5-809-12(Future TI 809-27), Concrete Slabs on Grade Subject to Heavy Loads

2.1.9 TI 5-809-28, Design and Construction of Conventionally Reinforced Ribbed Mat Slabs (RRMS)

2.1.10 TI 5-809-29, Structural Considerations for Metal Roofing

2.1.11 TI 5-809-30, Metal Building Systems

2.1.12 TM 5-818-7, Foundations on Expansive Soils

2.1.13 TM 5-853-2, Security Engineering – Concept Design

2.1.14 TM 5-853-3, Security Engineering – Final Design

2.1.15 ER 1110-345-53, Structural Steel Connections

2.1.16 ER 1110-345-700, Design Analysis, Drawings and Specifications

2.1.17 ETL 1110-3-447, Engineer of Record and Design Responsibilities

2.1.18 CESWD Design Criteria for Ribbed Mat Slab Foundations, 1995

2.1.19 CESWD Fallout Radiation Shelter Design Criteria, 1988

2.1.20 MIL-HDBK 1008C, Fire Protection For Facilities Engineering

2.1.21 EC 1110-1-92, Classification of Type of Construction.

2.2 **Construction Industry Codes and Specifications**

2.2.1 AISC Specification for Structural Steel Buildings - Allowable Stress Design and Plastic Design (1989).

2.2.2 AISC Load and Resistance Factor Design Specification for Structural Steel Buildings (latest edition).

2.2.3 AISC Manual of Steel Construction, Volume II-Connections (1992 with 1993 and 1994 errata)

2.2.4 ACI 318, Building Code Requirements for Structural Concrete (latest edition)

2.2.5 SJI Standard Specifications and Load Tables for Open Web Joists (latest edition).

2.2.6 ASCE 7, Minimum Design Loads for Buildings and Other Structures (latest edition)

2.2.7 AISI, Specifications of the Design of Cold Formed Steel Structural Members (latest edition)

2.2.8 AWS D1.1, Structural Welding Code by The American Welding Society (latest edition)

2.2.9 Aluminum Design Manual by The Aluminum Association (latest edition)

2.2.10 ASCE 16, Load and Resistance Factor Standard for Engineered Wood Construction (latest edition)

2.2.11 National Design Specification for Wood Construction, 1997

2.2.12 FEMA 302, NEHRP Recommended Provisions for Seismic Regulations for New Buildings and Other Structures (1997)

2.2.13 AISC Specification for the Design of Steel Hollow Structural Sections and Hollow Structural Sections Connections Manual. (latest edition)

2.2.14 SDI DDM02, Diaphragm Design Manual (latest edition)

2.2.15 ACI 530, Building Code Requirements for Masonry Structures by The American Concrete Institute (latest edition)

2.2.16 Low Rise Building Systems Manual by The Metal Building Manufacturers Association (latest edition)

2.2.17 BRAB Report, Criteria for Selection and Design of Residential Slab-on-Ground.

2.2.18 International Building Code (2000)

2.2.19 AISC, Seismic Provisions of Structural Steel Buildings, 1997

2.2.20 API Standard 640, Welded Steel Tanks for Oil Storage

2.2.21 AASHTO Standard Specifications for Highway Bridges (latest edition)

2.2.22 ACI 315, Manual of Standard Practice For Detailing reinforced Concrete Structures (latest edition)

2.2.23 AISC Hollow Structural Sections Connections Manual

2.2.24 SDI Design Manual for Composite Decks, Form Decks and Roof Decks. (latest edition)

2.2.25 AISC Code of Standard Practice for Steel Buildings and Bridges. (latest edition)

2.2.26 AISC Specification for Structural Joints Using ASTM A325 or A490 Bolts. (latest edition)

2.2.27 PTI Design and Construction of Post-Tensioned Slabs on ground by Post Tensioning Institute (1980)

2.2.28 A Practical Approach to the "Leaning" Column by Lousi F. Geschwinder, AISC Engineering Journal, Volume 32, No. 2, Second Quarter 1995.

2.2.29 Uniform Building Code (UBC) (latest edition)

3. **REQUIREMENTS FOR PROJECT ENGINEERING PHASE/CODE 3 (ARMY) AND PROJECT DEFINITION (AIR FORCE) SUBMITTAL**. (Reference: TI 802-01) When the design Scope of Works requires, either a Project Engineering or Project Definition brochure submittal is required. Typically this submittal is made at the 15 percent design completion stage, but the Scope of Work may modify this requirement. The parametric estimate must be based on reasonable description of the physical properties that

describe the project. At this pre-design stage the structural design engineer shall have used the proposed building footprint, room arrangement, and interface between the facility and its proposed building site and conceptual framing options cost estimates to select an economical structural framing system. Facilities for which structural design will be complex/unconventional or costly shall be developed as required establishing the project cost.

3.1 **Structural Submittal**. The structural portion of the brochure submittal will consist of a narrative and sketches/drawings showing that structural framing functional requirements, criteria and economics have been satisfied during the selection of a suitable structural system.

3.1.1 The presentation shall list structural technical criteria, manuals, codes, etc. applicable to the design.

3.1.2 The presentation shall summarize the design live loads, give the design basic wind speed, exposure category and importance factor, state the design Seismic Spectral Accelerations, S_s and S_1 , facility Seismic Use Group, and Seismic Design Category. Also, identify the threat tactic(s), threat severity level(s) and level(s) of protection for Antiterrorism/Force Protection established by DD Form 1391 for security of the facility.

3.1.3 The presentation should discuss the structural framing system that is judged to be appropriate and the alternatives that have been evaluated, i.e. load bearing shear walls and floor/roof diaphragms, braced frames and floor/roof diaphragms, moment resisting steel frames, reinforced concrete pan joist floor, bar joist with light weight concrete slab on metal form floor, etc.

3.1.4 Discuss any special requirements that affect the structural design and cost such as sloping construction site, costly foundations, unusually long span length, seismic joints, complex architectural features, Force Protection measures required for main structural framing system, walls, doors, windows, roofs, etc.

3.1.5 Submit preliminary calculations or rational used to size/evaluate/justify the recommended framing system and its estimated construction cost.

3.1.6 Submit sketches/drawings showing type floor and roof structure, column grid lines and locations of lateral braces

in frames, shear walls and any unconventional framing requirements

4. **REQUIREMENTS FOR CONCEPT (ARMY) SUBMITTAL**. When required by the Scope of Work on Army projects, this submittal is at the 35 percent design completion stage. The structural portion of the submittal consists of a structural narrative, design analysis and drawings.

4.1 **Structural Narrative**. Use the format shown in Chapter IX and include all of the information listed in the format that is applicable to the project.

4.1.1 Framing System. Selection of the structural framing system should be based on a cost comparison of competitive systems. Reasons for the final selection should be stated, including economic, functional, site or other considerations. The framing system's vertical and lateral load resisting systems should be clearly described.

4.1.2 Foundation Type. If the on-site soil investigations, soil testing and evaluation are complete, a foundation design analysis with final foundation recommendations should be in the Concept submittal. When this work is not complete a tentative foundation recommendation (based on information from past soil investigations and types of foundations previously used in the vicinity of the building site) should be given.

4.1.3 Live Loads. The live loads to be used for design should be stated. Loads should comply with TI 809-01 and ASCE 7, and any special conditions such as needed for computer room floors, mechanical room floors, etc.

4.1.4 Seismic Design. Preliminary seismic design is required. Give the site Seismic Spectral Accelerations, S_s and S_1, facility Seismic Use Group, and Seismic Design Category. State if seismic or wind controls the design of the lateral force resisting system. When seismic controls the design of the lateral force resisting system, describe the system selected using "Basic Seismic-Force-Resisting System" terminology from Table 7-1 of TI 809-04. Also describe any special seismic design features such as seismic separation joints. Spectral accelerations S_1 and S_s for each base in the Southwestern Division are given in paragraph 22. A design aid for Seismic Design Category is in paragraph 23.1.

4.1.5 Wind Loads. The narrative should state the basic wind speed, importance factor and exposure category, and should

utilize references TI 809-01 and ASCE 7 as the basis for calculating wind pressures. The basic wind speed for each base in the Southwestern Division is listed in paragraph 22.

4.1.6 Force Protection. The narrative should state the design threat tactic(s), threat severity Level(s) and level(s) of protection for force protection established on DD Form 1391 for the facility. Identify the structural superstructure measures incorporated into the main structural framing system, walls, doors, and windows to provide the level of protection required.

4.2 **Design Analysis**. Provide calculations necessary to document comparative cost investigations and to demonstrate the adequacy of the structural design concepts.

4.3 **Structural Drawings**. Drawings should show the following:

4.3.1 Foundation plan and typical sections.

4.3.2 Floor framing plan(s), where applicable.

4.3.3 Roof framing plan.

4.3.4 Lateral load resisting system (shear walls, frame bracing, moment resisting frames, wall system, etc.).

5. **REQUIREMENTS FOR FINAL SUBMITTAL**.

5.1 **Structural Narrative**. The write-up should cover functional, technical requirements, and design methods upon which the facility foundation, superstructure, floor, roof and wall systems where designed. The write-up should address design dead, live, wind, and seismic or other loads. Selection of structural systems for economy and to meet technical requirements such as seismic and force protection shall be addressed.

5.2 **Design Analysis**:

5.2.1 See Chapter IX - Design Analysis, and ER 1110-345-700 for additional structural requirements.

5.2.2 Lateral Load Analysis In addition to an analysis for vertical gravity loading, a complete lateral load analysis is required for all buildings to design a continuous load path from the point that the lateral load is applied to the foundation. Design lateral loads caused by wind and due to

earthquake ground motion shall be analyzed. Additional discussion of lateral load design analysis requirements are in Chapter IX. Basic design wind speed seismic spectral accelerations for military installations within CESWD are in paragraph 22. A design aid for seismic analysis is in paragraph 23.1.

5.3 **Structural Drawings**:

5.3.1 Use standard details and notes shown on enclosed plates, where applicable.

5.3.2 Use grade beam, slab, lintel, column and footing schedules where the size of building warrants.

5.3.3 Show sufficient sections and provide sufficient details required to construct the superstructure framing, building foundation, walls and floors so they perform in accordance with the design analysis intent and detail miscellaneous items including, steps, porches, mechanical equipment pads, cooling tower foundations, etc.

5.3.4 Show steel column base details and detail all critical steel beam connections. Simple connection details (Shear Connections) may be selected by the structural steel fabricator from the AISC Manual of Steel Construction. Where connections are not detailed, show design shear capacities. The Engineer of Record should approve the structural adequacy of shear connections detailed by the steel fabricator as required by ETL 1110-3-447.

5.3.5 All reinforced concrete sections should be detailed in accordance with the Manual of Standard Practice for Detailing Reinforced Concrete Structures by the American Concrete Institute (ACI 315).

5.3.6 Roof openings and all supports for ventilators, fuel tanks, electrical bus ducts, unit heaters and other equipment must be detailed or adequately described on the drawings or in the specifications. The structural designer shall ensure that all mechanical and electrical equipment is properly supported and that Architectural features are adequately framed and connected, especially where seismic design is required.

5.3.7 Masonry for buildings should be detailed to show required thickness, vertical reinforcement size and spacing, dowels, pilaster depth, reinforcement and ties, wall stiffeners adjacent to openings, lintel depth, reinforcement

and end bearing dimensions, bond beam spacing and reinforcement, joint reinforcement spacing and size, and control joint locations and details. When walls are curtain walls show details of masonry connections to the main frames.

5.3.8 Light cold formed steel framing should be detailed to show steel stud, steel joist, spacing and required physical properties including depth, thickness, moment of inertia, section modulus. Assembly details to show wall top and bottom tracks along with their required physical properties and their connections to floors or other framing. Details including required web stiffeners, foundation clips, end clips, joist hangers and the required number and size of connecting screws and/or weld size and length should be included. Framing around openings shall be detailed to show headers, nested or double/triple members on sides of openings shall be shown. Diagonal bracing and its connection to foundation and light gage framing shall be fully detailed when required for building structural stability. Intermediate bridging for lateral support of studs/joists needs to be fully detailed. See paragraph 19.1 for special designer requirements.

5.4 **Seismic Design**:

5.4.1 Seismic design parameters, as indicated by the general notes on Plate S1 shall be on the structural drawings in the Contract Plans.

5.4.2 Details of construction on the structural drawings will be sufficient to assure that construction meets applicable seismic requirements in TI 809-4, TI 809-5 and FEMA 302.

6. **LOADINGS**.

6.1 **Minimum design loads and load case combinations** shall be in accordance with references TI 809-01, and ASCE 7 except as stated below.

6.2 **Load combinations for strength designs** of concrete shall be based on ACI 318 and AISC for Allowable Stress and Load and Resistance Factor design for structural steel.

6.3 **Minimum design pressure for interior walls** and partitions shall be 240 Pa, except use 480 Pa for interior masonry walls.

6.4 **For applicable basic wind speeds**, seismic spectral accelerations, and ground snow loads refer to paragraph 22.

7. **MATERIALS AND DESIGN CODES**.

7.1 **Concrete**.

7.1.1 Design of concrete elements shall conform to ACI 318.

7.1.2 Use a concrete strength of 21 MPa (3000 psi) for reinforced concrete and 35 Mpa (5000 psi) for prestressed concrete. For concrete slab-on-grade subject to heavy wheel load see paragraph 10.3.6.

7.1.3 Reinforcing should be ASTM A615M grade 420 (ASTM A615 grade 60) or equivalent except that ties may be ASTM A615M grade 300 (ASTM A615 grade 40).

7.2 **Steel**.

7.2.1 Design of hot rolled steel members and connections shall conform to applicable AISC manuals referenced in paragraph 2.2. Hot rolled steel members should generally conform to ASTM A992 or ASTM 572 Grade 50, structural tubing ASTM A500 Grade B, channels, angles, plates may be ASTM A36.

7.2.2 Design of cold formed steel shapes shall conform with TI 5-809-07 and AISI, Specifications of the Design of Cold Formed Steel Structural Members.

7.2.3 Design of open web joists and joist girders shall conform to Steel Joist Institute Standard Specifications, Load Tables and Weight Tables for Steel Joists and Joist Girders.

7.2.4 Design of steel decking used as a diaphragm shall conform to the Steel Deck Institute Diaphragm Design Manual and the Design Manual for composite Decks, Form Decks and Roof Decks.

7.3 **Masonry**. Concrete masonry units (CMU) shall be designed in accordance with TM 5-809-3 (future TI 809-6), TI 809-04 and ACI 530. Use type "S" mortar. See paragraph 1.1.2 for guidance on size of masonry units to use.

8. **FOUNDATION DESIGN**:

8.1 **General**. Applicable notes from Plates 4 and 5 should be included in the structural drawings, preferably on the foundation plan. Heavy, vibration-producing equipment, such as chillers, fire pumps, engine/generator sets and high-pressure air compressors, should have separate isolated

foundations. Some equipment should be provided with vibration isolators, see TM 5-805-4.

8.2 **Type of Foundation**. The recommended foundation type, allowable bearing pressure, foundation depth, expansive/settlement parameters, etc. will be included in the final Foundation Design Analysis. The Foundation Design Analysis should also indicate whether slab-on-grade first floors may be used or whether first floors must be structurally supported over a void due to expansive soil conditions. The foundation type and design must satisfy the limiting deflections required too ensure proper performance of the building superstructure. Differential settlements/heave should be limited to L/600-L/1000, L/360-L/600 and L/200-L/360 for rigid, semi-rigid and flexible framing/wall systems, respectively; where L is the distance between points in question. A special criterion is to be followed in expansive soils areas.

8.3 **Design loads**. Allowable foundation bearing pressures should be given in the Foundation Design analysis and will be normally be given as "net" values; intended for use with service loads consisting of dead loads plus that portion of live loads that act continuously. Use of common live load reduction factors is one way to approximate the continuous live load. The "continuous live load" concept does not apply to certain foundations with high transient loads, such as crane loads, where the full live load should be considered in the foundation load. Since bearing allowable is net values, do not include the weight of footings, piers or overburden in the design loads. Where wind or seismic loads cause foundation uplift, these loads should be combined with any pier heave forces due to expansive soils to determine the total tension load for design of pier shaft reinforcement. Lateral forces may be present due to wind or seismic loads or due to rigid frame thrust. Such loads may require use of foundation ties. Ties for deep foundations may be necessary in seismic zones. Where Force Protection requires design for blast pressures for design of frames, walls, or roofs these loads shall conform to TI 5-853-3.

9. **PIER-AND-BEAM FOUNDATIONS**:

9.1 **Grade Beam Design**:

9.1.1 Grade beams should be designed in accordance with the ACI Code. The minimum tension reinforcement ratio "p" should be 1.38/fy with fy in MPa (200/fy with fy in psi) unless the

computed reinforcement area required is increased by one-third. Provide a minimum of No.10 ties at 600mm o.c. throughout the length of the beam.

9.1.2 Use details similar to those shown on the plates in Appendix A.

9.1.3 A 150mm (6-inch) carton formed void will usually be required under all grade beams in expansive soil areas. This will be covered in the Foundation Design Analysis.

9.1.4 Masonry walls and partitions in buildings in expansive soil areas, with slab-on-grade floors should be on grade beams (even 102mm (4 inch) walls) in order to reduce wall cracking problems experienced in the past. Non-load bearing masonry walls and partitions in non-expansive soil areas may be supported on thickened slabs on grade. Load-bearing walls and shear walls will be supported on grade beams or strip footings in non-expansive foundations.

9.1.5 In buildings with slab-on-grade floors where the finished floor is more than 300mm above outside grade, special attention must be given to design of exterior grade beams to withstand lateral soil pressure from the fill under the floor slab.

9.1.6 The corner reinforcing details shown on Plate S12 should be used to prevent cracking at corners.

9.2 **Drilled Pier Design**:

9.2.1 Piers should be designed as short, tied columns with minimum vertical reinforcement per ACI requirements. Note that since pier shaft diameters are often larger for Geotechnical reasons than required for structural loads, the provisions of ACI 318 that allow a reduced concrete area to determine reinforcement may apply. For piers in expansive soil see paragraph 9.2.6 below.

9.2.2 Minimum pier diameters are 450mm (18 inches) for piers up to 12 meter (40 feet) in depth and 600mm (24 inches) for piers deeper than 12 meter (40 feet).

9.2.3 Bell diameters should be specified in increments of 150mm (6 inches) and should not be greater than 3 times the pier diameter to enable the use of typical machine belling equipment.

9.2.4 Size bells for dead load plus the portion of live load that acts continuously.

9.2.5 Pier loads should be computed only to grade (weight of pier, bell and earth above base of footing will be taken into account in determining "net" allowable bearing pressure given in Foundation Design Analysis).

9.2.6 Piers that extend through expansive soils may be subjected to tension loads caused by soil friction on the shaft as the soil expands. The Foundation Design Analysis will give either recommended pier design tension or minimum shaft tension reinforcement and minimum bell size to anchor the pier when expansive soils cause pier tension. Pier tension reinforcing should be sized for net load obtained by subtracting the pier load due to the building dead weight from the tension due to soil heave, using a steel stress of 420 MPa (60 ksi), depending on the steel specified.

9.2.7 See details and notes on Plate S11.

9.3 **Design of Grade Beams and Drilled Piers Carrying Lateral Loads**. The lateral force resisting system includes the structural system that transfers loads to the earth foundation. A system that ties the foundation elements together is highly desirable. Slab-on-grade floors are isolated from the superstructure foundation and this system requires careful evaluation of grade beams which are subject to lateral thrusts due to applied vertical loads, those which support diagonal wall bracing or short shear walls, and those which support exterior walls. Designers must be cognizant of the fact that seismic lateral forces computed by the Equivalent Static Force Method are lower than the peak dynamic force. Appropriate soil safety factors must be applied to limit lateral deflections of foundation elements and to compute structural stresses in piers and grade beams. The structural designer should see the Foundation Design Analysis and/or consult with the geotechnical engineer for recommended lateral soil design parameters.

10. RIBBED-MAT SLAB FOUNDATIONS.

10.1 **General Requirements**. Ribbed mats should be designed in accordance with reference Design Requirements for Ribbed Mat Foundations by CESWD, as modified by TI 809-28. Many of the provisions of these references are provided in the following paragraphs.

10.1.1 The ribbed mat foundation is a monolithic reinforced concrete slab-on-ground with stiffening ribs. The stiffened mat slab is particularly suited for structures on shallow foundations in expansive soils, where changing moisture content causes portions of the foundation soils to heave or shrink. Ribbed-mat foundations are simple and economical solutions to many foundation problems and have performed well for many military and civil works buildings. The restraint from the ribs below the slab has caused cracking in the slab that does not effect structural adequacy but is esthetically unacceptable for some buildings. Many of the prescribed criteria provisions have been developed to control slab cracking. Use of ribbed mats for floors in administrative areas or other highly visible floors that are not covered by vinyl tiles or carpets are not recommended. Due to the potential for ribbed mat slab cracking, it is preferable to use slab-on-grade foundations in non-expansive soils instead of ribbed mats.

10.1.2 Soil parameters for use in the structural design methods for ribbed mat foundations will be as furnished in a "Foundation Design Analysis." Criteria for development of the design soil parameters are in Chapter XIII, Geotechnical.

10.1.3 Ribbed-mat slabs are designed as prestressed or conventionally reinforced as selected by the design engineer. The construction contractor shall not be given the option of changing the ribbed-mat slab from one type to another. The reason for this prohibition is that design parameters (e.g., moments of inertia) may be dependent on the type of ribbed-mat slab being designed and may affect calculated shears and moments.

10.2 **Design Requirements**.

10.2.1 The design procedure involves two parts: (a) Meeting minimum prescribed requirements and (b) performing design analysis. See reference criteria in par 10.1 above.

10.2.2 Minimum Requirements - The minimum requirements apply to ribbed mat foundations on expansive and non-expansive soils. Many of these requirements are illustrated on Plate S16.

10.2.3 Joint spacing: Ribbed-Mat-Slabs shall be placed in 6.0 meters to 7.5 meters wide lanes. Lanes for slabs subjected to vehicular loads shall have transverse sawed joints spaced at 500 to 750 times the slab thickness in

millimeters. Other slabs shall have sawed joint spacing at a maximum of 6.0 meters. Joint sawing needs to be accomplished immediately after concrete finishing. The construction joint detail is shown on Plate S19. A typical plan layout is shown on Plate S15.

10.2.4 Minimum Slab Reinforcement: Minimum slab reinforcement shall be 0.5% times the gross slab sectional area each way with a maximum reinforcement bar spacing of 230 millimeters each way. The maximum size of bar in slabs shall be #16, with a clear spacing distance of the slab thickness divided by four below top surface of slab, but not less than 40 millimeters nor greater than 65 millimeters. Slab reinforcement shall be continuous through construction and sawed joints.

10.2.5 Ribbed Mat slab surfaces should be **moist cured for 7 days using wet mats**. Guide specifications should be changed to require wet mat curing when preparing contract specifications.

10.2.6 Specify Minimum 28-Day Compressive Strength of 21 MPa (3.0 ksi) concrete strength except for vehicle loaded slabs where 28 MPa (4.0 ksi) strength shall be specified.(Note: 28Mpa concrete cylinder strength is approximately equal to 3.4 MPa (500 psi) flexural strength.) Specify water/cement ratio maximum of 0.42. Require an aggregate gradation that uses 25mm to 40mm (1 to 1.5 inches) maximum size coarse aggregate. Include these requirements in the contract specifications.

10.2.7 Ribs should be continuous across the slab, usually spaced no more than 6.0 meters on centers on expansive soils and 7.5 meters on centers on non-expansive soils. Rib depths should extend below the frost line but normally are limited to 1.0 meter in order to minimize problems with maintaining the trench walls during construction. Minimum rib width should be 300mm. Optional horizontal construction joints located near the bottom of the slab are not desirable but are sometimes used to facilitate construction. Use ribs on either side of large openings in the slab. In buildings with rigid frames such as pre-engineered metal buildings, transverse foundation ribs can be designed to take the rigid frame thrust. Minimum rib reinforcing percentage "p" for expansive soils should be 0.33 percent of the rib cross sectional area top and 0.33 percent bottom. The total reinforcing percentage may be reduced to 0.5 percent of the cross sectional area of ribs when founded on non-expansive soil areas. Provide more reinforcement when the analysis shows more is required to carry the loads.

10.2.8 Significant wall loads, column loads, etc., should be distributed to the soil by the ribs. An effective width of slab on each side of the rib, equal to the slab thickness, may be added to the rib width for the effective bearing area. The bearing pressure under the ribs shall not exceed the allowable soil bearing pressure. Ribs may be widened locally or thickened integral spot footings may be used to distribute column loads to the soil. See Plate S15.

10.2.9 Generally vapor barrier, capillary water barrier, and non-expansive fill should be used under ribbed-mat slabs. Exceptions may occur in arid climates when the site has highly pervious foundation material and a low water table. The designer should follow the recommendations in the Foundation Design Analysis.

10.2.10 Expansion joints should be used to break up an irregularly shaped building (L- or U-shaped for example) into two or more rectangular shapes when structural analysis results in unusually large ribs.

10.2.11 Where floors are subjected to vehicular loading, the floor slab must be designed in accordance with reference TI 809-05. The Geotectnical Engineers should provide subgrade modulus, K, for slab design when there are wheel loads. Normally, 130mm will be the minimum floor slab thickness except for small utilitarian type buildings 230 square meters or less where 100mm will be sufficient.

10.3 **Additional requirements for ribbed mat slabs on expansive foundations are**:

10.3.1 In expansive soil areas, existing surface materials may be removed and replaced with compacted non-expansive fill to decrease the foundation’s swell potential. The depth of non-expansive fill required is site dependent and is normally based on the expansive intensity that is usually higher near the surface. The depth shall be as required by the Foundation Design Analyses.

10.3.2 At corners of the building diagonal ribs, as shown on Plate S15, should be used to keep the corners supported in case of loss of support under the perimeter ribs.

10.3.3 Center lift and edge lift analysis predict moments due to soil displacements near the edge of the slab. However, soil displacements have also been observed at various interior

locations. To account for possible interior soil displacement, interior ribs and reinforcement must be continuous.

10.4 **Analytical Requirements**. All ribbed mats must be designed to distribute concentrated loads to the soil as spot footings, strip footings, or by beam on elastic foundation methods. Ribbed mats on expansive soils must also be designed for center lift and edge lift conditions. Design for these conditions should be as described in references in paragraph 10.1 above.

10.4.1 In expansive soils, perimeter ribs must be designed to span between transverse ribs while subjected to loads and soil pressures as calculated for the center lift and edge lift conditions. For center lift the soil pressure under perimeter ribs is frequently zero.

10.4.2 Diagonal ribs should be of the same size and reinforcement as the larger adjacent transverse rib.

10.4.3 Design for expansive soil conditions represents an extreme condition, therefore, it is permissible to multiply the usual ACI factored live plus dead load (1.4D + 1.7L) required strength by 0.75 when using strength design or use a one-third increase in allowable stresses for the service load design method.

10.5 **Prestressed Designs** - The above requirements also apply to prestressed ribbed mat foundations except as follows:

10.5.1 Slab reinforcement and rib top reinforcement may be deleted and replaced with post-tensioning strands. Mild steel (0.33 percent) shall still be provided in the bottom of ribs. Minimum prestress shall be 700 kPa (100 psi), including effects of subgrade friction as calculated by the PTI method, reference 2.2.17.

10.5.2 Section properties for calculation of bending stresses shall consider an effective flange for each rib as limited by ACI 318 for T-beams. Concrete tensile stress shall be limited to 3 multiplied by square root of f_c' and shear stress limited to 1.1 multiplied by square root of f_c'.

10.6 **Design Requirements for Family Housing**.

10.6.1 All design requirements of paragraph 10.2 through 10.5 apply to ribbed mat foundations for family housing, except as follows, and as shown on Plate S16.

10.6.2 Minimum rib width is 250mm, minimum depth is 500mm. Rib reinforcement shall be a minimum of 0.25 percent top and 0.25 percent bottom.

10.6.3 Minimum slab thickness is 100mm, with a minimum of 0.2 percent reinforcement. Capillary water barrier may be reduced to 100mm.

10.6.4 Analytical design may be by the CESWD method or by the PTI method. If post-tensioning is used, the criteria in paragraph 10.5 shall apply, except that minimum rib bottom steel may be 0.25 percent.

10.7 **Moisture control**. Controlling foundation moisture is critical for buildings on expansive soils, using ribbed mats. The structural designer should coordinate with the site designer and landscape design on the importance of measures to control water near the perimeter of the building.

10.7.1 All surface water flowing into the building site should be diverted around the structure so that it will not infiltrate the building subgrade.

10.7.2 Rainfall should be prevented from entering the ground near the perimeter of the structure, by providing paving where adequate drainage slopes are not possible and diverting gutter downspouts away from the foundation.

10.7.3 Wash-down floors should slope to drains to prevent water from entering the subgrade through joints in the floors.

10.7.4 When surface or underground water cannot be diverted away from the building, consider using interceptor or perimeter drains. Foundation drainage systems should be carefully designed to prevent them from introducing water to the foundation.

10.7.5 Landscape plantings and irrigation systems should be planned so that watering of beds or lawns does not introduce water to the building foundation and drying of the foundation due to withdrawal of water by roots from large plants near the building perimeter does not occur.

11. **FIRST FLOOR DESIGN**: Minimum design live and dead loads shall conform to criteria specified in the reference in TI 809-01 and ASCE 7. The design live load will be the larger of the minimum specified or the actual loads produced by the occupancy of the building.

11.1 **Slab-On-Grade Floors**. This is an economical floor system and should be used where the potential foundation movements are minor and there are not functional or esthetic reasons why movement will cause concerns. The Foundation Design Analysis may prohibit use of slab-on-grade floors when there are expansive soils unless some differential movement of the floor can be tolerated. Slab-on-grade floors may be used for buildings with light or heavy live loads and those subject to vehicular traffic (garages, shops, hangars, etc.). Administrative areas likely should not use slab-on-grade, because of esthetics, when small foundation movement is predicted.

11.1.1 Slabs-on-grade with light design loads (up to 1780 Pa (400 psf) or 22 kN (5 kip) fork-lift) should be designed in accordance with TI 809-02. Slabs subjected to heavy static or vehicular loads should be designed per reference TM 5-809-12.

11.1.2 A "K" value for use in designing slabs subject to vehicular traffic should be furnished by the Geotechnical Engineer. The "K" value is usually equal to or greater than 54300 kPa/m (200 psi/inch) due to the use of gravel and compacted, non-expansive fill under the floor slab.

11.1.3 Slabs shall be a minimum of 100mm thick with 0.1% reinforcing (for 7.5 meters joint spacing), except in moderately expansive soils use minimums of 125mm thickness and 0.2% reinforcing. Reinforcement shall be reinforcing bars or plain or deformed welded wire fabric. In tactical equipment shops interior slabs on grade will typically match the exterior hardstand pavement thickness with the addition of a minimum of 0.1 percent reinforcing steel. Aircraft hangar slabs will be designed using aircraft pavement criteria; the interior slab thickness will normally match the exterior pavement thickness with the addition of a minimum of 0.1 percent reinforcing steel.

11.1.4 Joints for slabs-on-grade should be shown on the contract drawings. Maximum joint spacing may range from 7.5 meters (0.1% reinforcement) to 15 meters (0.3% reinforcement),

depending on slab reinforcing available for shrinkage cracking control. Slab reinforcement is discontinuous at joints. Use joint details shown on plates S21 and S22.

11.1.5 Provide a vapor barrier under all slabs-on-grade floors except for open warehouses, stoops, transformer pads, pavement, porches, etc. Vapor barriers may not be needed in arid regions with a deep water table.

11.1.6 Provide 150mm of capillary water barrier (gravel) under all building floor slabs-on-grade where slabs are above outside finished grade (basement slabs will not have gravel under them). Typically this requirement should be addressed in the Foundation Design Analysis.

11.1.7 Provide a 1.46 kg (30#) felt joint between floor slabs-on-grade and foundation beams and piers and other vertical surfaces which should be isolated from the slab.

11.1.8 Slabs-on-grade shall not bear on grade beams except where articulated pads are used.

11.1.9 Slabs-on-grade should be 21 Mpa (3000 psi) concrete. Slabs-on-grade subjected to vehicular loading should be designed using a minimum flexural strength in accordance with reference TM 5-809-12, (at Fort Polk the maximum flexural strength attainable from local concrete batch plants is 4.1 Mpa (600 psi).

11.1.10 Where interior columns occur, floor joints should be placed on column centerlines.

11.1.11 Slabs-on-grade with interior floor drains, such as mechanical rooms, will have a joint sealant placed on top of perimeter felt joint.

11.1.12 In washrack areas, joints should be eliminated by use of additional reinforcement to control shrinkage cracking. The joints between slab-on-grade and the foundation should have a joint sealant placed on top of the joint.

11.1.13 Topping over concrete slabs should be avoided, where possible. Where it must be used, topping should be a minimum of 50mm thick and reinforced with reinforcing bars or wire mesh in flat sheets.

11.1.14 In small areas surrounded by grade beams, such as entries, janitor's closets and corridors, where compaction of

fill is hard to control, use a structural slab over a carton formed void.

11.1.15 In areas with ceramic or quarry tile or terrazzo floor finish, the floor should be structurally supported to minimize cracking of the floor finish. This is especially true where the walls or partitions surrounding the area are supported on grade beams. With a slab-on-grade floor, a 1.46 kg (#30) felt joint is normally provided between the slab and grade beams. Differential movement between the slab and the grade beam will result in cracking of the wall base and thereby create an unsightly and unsanitary joint at the base of the walls. As an alternate, small interior areas of tile or terrazzo finish surrounded by non-load bearing partitions may be placed on a turned-down-edge, or ribbed, slab isolated from the surrounding slab-on-grade floors by a 1.46 kg (#30) felt perimeter joint at the outside face of the partitions.

11.2 **Structurally Supported Floors**. Structurally supported first floors will be required in the following cases:

11.2.1 In expansive soils areas, the Foundation Design Analysis will usually recommend that the first floor be supported. Poured-in-place structural slabs and grade beams cast on carton forms or double tees supported by grade beams to form a minimum 150mm (6 inch) void are recommended systems. This 150mm (6 inch) void space does not have to be vented or provided with access and floor insulation. Bar joist or steel beam framing is not recommended since condensation in the unvented void space tends to cause corrosion.

11.2.2 In buildings where extensive, underfloor utility piping is required (such as hospitals, dental clinics, etc.), the using service will usually require that a vented, accessible crawl space be provided with a minimum of 460mm (18 inches) clearance below the lowest framing member. See crawl space criteria in the Architectural Chapter III. Since the crawl spaces are vented, underfloor insulation is required. Unless controlled by functional requirements, the selected framing system should be based on economy.

12. **UPPER FLOOR DESIGN**: Minimum design live and dead loads shall conform with criteria in the TI 809-01 and ASCE 7. The design live load will be the larger of the minimum and the actual loads produced by the occupancy of the building.

12.1 **System selection** should be based on economy unless functional or other considerations govern. Experience has

shown that a system consisting of a structural concrete slab on stay-in-place corrugated metal forms supported by open web steel bar joists is often the most economical.

12.2 **Upper floors are used as diaphragms**, in most instances, to transmit lateral forces to shear walls or building frames. Design of diaphragms is covered in paragraph 18, below.

13. **STOOPS, RAMPS, AND PORCHES** Use details on enclosed Plates S32, S33, and S34. Large stoops, porches and main building entrance porches for dormitories, libraries, chapels, mess halls, etc., should be supported on foundations similar to the building foundation. Small stoops may be soil-supported, turned-down-edge type, slip-doweled to the building foundation.

14. **BASEMENTS**. Basement floors will be slab-on-grade separated from basement walls by 1.46 kg (30#) felt, except in expansive soil areas where a structural slab over a 150mm (6-inch) carton formed void may be required. Basement walls should have membrane waterproofing on the outside and under the slab with a continuous perimeter drain around basement. See details on enclosed Plates S35, S36, and S37. Basement walls must be designed for lateral hydrostatic pressure as well as lateral soil pressure. In such cases, the perimeter drains are usually assumed to be 50 percent effective; i.e., the water table in soil against the wall is assumed to be located at one-half the difference between the site design water table elevation and the elevation of the wall drain.

15. **WALLS AND PARTITIONS**:

15.1 **Lateral Loads**. Exterior walls must be designed to withstand wind and/or seismic lateral loads while spanning vertically from floor to floor (or roof) or horizontally between columns, pilasters or intersecting walls. The wall components design wind load will be determined from the worst possible combination of exterior and interior pressures (either inward or outward) and other provisions of criteria referenced in paragraph TI 809-02 and ASCE 7. Seismic loads for structural and architectural components will conform to criteria referenced in paragraph TI 809-04. Interior partitions must be designed to withstand a minimum lateral pressure of 240 Pa when using steel studs and 480 Pa for masonry walls or a lateral seismic load and spanned vertically or horizontally. If spanned vertically, partitions must be supported at the top by the roof or floor framing. Typical details for lateral support of metal stud partitions extending

to bar joists is shown on plate S47 and for masonry walls on S42.

15.2 **Masonry Walls**: Plans for new construction in which the basic 100mm module is used for building lay-out are typically detailed with hard metric masonry. Concrete masonry units and clay brick manufactured to metric standards are not readily available. Soft metric CMU and brick, equivalent to standard I-P units, may be used by P.L. 104-289. Since this is common in CESWD this paragraph describes the soft metric design.

15.2.1 CMU and brick-CMU walls and partitions will be designed in accordance with TM 5-809-3 (future TI 809-06) or TI 809-04, as applicable.

15.2.2 Specify, and design for, type "S" mortar (F_m'= 9300kPa (1350 psi)).

15.2.3 Minimum Reinforcement. All masonry exterior, bearing and shear walls will be reinforced as specified in references given in paragraph 15.2.1. Unreinforced masonry structural walls will not be used. Where vertical reinforcement is required for CMU walls 255mm (10 inches), or less, in thickness use one reinforcing bar per grouted cell and place the bar in the center of cell. Use of two bars per grouted cell is not recommended in CMU less than 305mm (12 inches) thick due to the difficulty in obtaining proper reinforcement placement. Minimum seismic reinforcement details for use on facilities with a Seismic Design Category of C or higher are on plates S44, S45, and S46.

15.2.4 The use of 102mm (4-inch) CMU single wythe interior partitions and walls is not recommended. When vertical reinforcing is required the cells in 102mm (4-inch) CMU are too small to properly grout in a vertical reinforcing bar. Do not use 102mm (4-inch) CMU in seismic areas.

15.2.5 Double wythe brick-CMU exterior walls should be cavity walls with a 50mm minimum cavity to prevent moisture penetration. Due to moisture penetration CMU should not be used as an exterior wythe in cavity walls or as a veneer. Composite walls will not be used.

15.2.6 For cavity walls, if reinforcement is required and the outer wythe is brick (or 102mm (4-inch) CMU which cannot be reinforced), the inner wythe should be assumed to take the entire lateral load and should be reinforced accordingly.

15.2.7 Where roof or floor diaphragms are attached to bond beams which serve as the diaphragm chord, the bond beam reinforcement must be continuous across CMU control joints. If the wall is exposed to view, provide a "dummy joint" in the bond beam to match the control joint location.

15.2.8 Wall control joint locations and spacing and other crack control measures will be in accordance with references listed in paragraph 15.2.1, as applicable. Show control joint locations on architectural plans and elevations.

15.2.9 Vertical and horizontal reinforcement requirements for masonry walls must be clearly indicated on the structural or architectural drawings.

15.2.10 Masonry walls must be kept clear, 20mm minimum, of steel columns and soffit of steel beams. Also, attachments of masonry walls to building frames must be designed to allow independent movement in the plane of the wall and prevent shear wall action. Plates S41 and S42 show typical details.

15.3 **Steel Stud Walls and Partitions:** Light gage steel studs may be used for interior and exterior, load and non-load bearing, wall construction for most buildings. **See paragraphs 5.3.8 and 19.1 of this chapter for structural designer responsibility and design and detailing requirements**.

15.4 **Precast Concrete Walls**. Precast, site-cast (tilt up) or factory cast concrete, may be used for curtain walls or load-bearing shear walls.

15.4.1 PCI Design Handbook, "Precast and Prestressed Concrete," and PCA Engineering Bulletin, "Tilt-up Load Bearing Walls," may be used as design guides.

15.4.2 Special attention should be given to the need for slip-connections and/or additional reinforcement at connections to prevent or minimize cracking due to thermal expansion or contraction.

15.4.3 When curtain wall panels are connected to a building frame at two floor levels, design/detail the connections so the panel bears at only one level and receives only lateral support at the other level, to prevent load bearing/shear wall action.

15.4.4 For design in seismic zones, reference TI 809-4 and FEMA 302.

15.4.5 Precast panels will be designed for in-place loads similar to other building elements with the required steel reinforcing. The AE shall ether fully detail connections between the panels and the building framing or provide the in-place design loads on the plans for the contractor to use in selecting the connection. When the contractor is permitted to design and select the connection, responsibility for the connection shall remain with the engineer of record designer. Any additional reinforcing for shipping, transportation or erection is the responsibility of the panel supplier.

16. **BUILDING FRAMES**:

16.1 **General**. Systems with load bearing walls and shear walls are often more economical than complete building frames and should be considered in the selection process. The structural system shall be designed for both the vertical and horizontal loads required by the references in paragraphs TI 809-1, TI 809-4 or TI 909-5.

16.2 **Concrete Frames**:

16.2.1 Cast-in-place or precast concrete frames may be used as vertical-load-carrying or lateral-load carrying moment resisting frames with restrictions on their design for use in resisting seismic forces. Table 7-1 of TI 809-04 identifies the type of moment resisting concrete framing required for each Seismic Design Category. Use of precast seismic-force-resisting frames is permitted, provided the frame emulates the behavior of monolithic reinforced concrete construction or relies on demonstrated experimental evidence that seismic loading comparable to monolithic reinforced concrete is achieved. Complete documentation shall be submitted and approved by the supervising district when precast seismic-force-resisting framing is proposed for use.

16.2.2 Structural lightweight concrete may be used for floor systems but not in columns or beams.

16.2.3 Frame design will be in accordance with reference TI 809-4 and/or ACI 318, as applicable.

16.2.4 Provide expansion joints through concrete framed buildings at 75 meter on center, maximum.

16.2.5 Coordinate design with the applicable general notes on enclosed Plate S1.

16.3 **Steel Frames**:

16.3.1 Design will be in accordance with applicable AISC references listed in paragraph 2.2, TI 809-04, and SJI Standard Specifications, as applicable. Frame drift must be limited as necessary to prevent damage to supported wall systems and brittle cladding materials.

16.3.2 The framing plan should utilize braced frames, when practical, to carry lateral loads due to the economy of this system. When rigid frames are utilized to resist lateral loads, recommend that they consist of a combination of columns, which are rigidly connected to the beams, and columns with simple beam connections because of the high cost of using rigid connections at every joint. Assume the columns of both braced and rigid frames to be pin-connected at the foundation for design. The gravity only columns of both braced and rigid frames may be designed for an effective length equal to their actual length, ie. K = 1. Design of the columns with rigid connections to beams shall include second order effects. Second order effects consist of member effects and structure effects. When frames have a combination of rigidly and simply connected columns, the column effective length factor, K, for rigidly connected columns determined by the alignment chart nomograph in the commentary to the AISC Specifications does not account for the structure effects due to the simply connected columns. The reference in paragraph 2.2.28 presents several acceptable ways to account for the second order structure effects that may be used for this type of frame.

16.4 **STRUCTURAL STEEL CONNECTIONS**: Connection design shall be in accordance with applicable AISC Specifications referenced in paragraph 2.2, TI 809-04 and ER 1110-345-53. Structural steel connections may be classified under one of two categories, critical connections, or simple connections. Critical connections are those subjected to moment(s) and/or axial loads in combination with shear loads. Simple connections are connections subjected to shear only and are classified as shear connections. As required by ETL 1110-3-447, all critical structural steel connections shall be designed and completely detailed and shown on the contract drawings. When seismic controls the design of the main frame, fully restrained moment connections shall comply with requirements of TI 809-04. Neither construction contractors nor steel fabricators will be permitted to design critical steel connections. Simple connections shall also be detailed on the contract drawings unless the A-E scope of work

specifically exempts detailing of these connections. In cases when allowed by the A-E scope of work, steel fabricators will be permitted to select and detail simple connection details (shear connections) from the AISC Manual of Steel Construction. When the steel fabricator is permitted to select and detail simple connections, responsibility for the connection's structural adequacy shall remain with the design engineer of record and the Contract Plans and Specifications shall require submission of these connections to the A-E for approval.

16.4.1 For one-story steel frame buildings bar joists or joist girders may be used in moment-resisting frames by extending the lower chord and attaching it to columns. The bottom chord connection will not be made until all of the roof dead load is in place. Calculations must be included in the design analysis to demonstrate adequacy of such construction.

16.4.2 Provide expansion joints through steel framed buildings at 90 meters on center maximum.

16.4.3 Trusses should be designed with web member arrangement such that members are symmetrically loaded in the plane of the truss.

16.4.5 See applicable superstructure notes on enclosed Plate S4.

17. **ROOFS**:

17.1 **General**: See Chapter III, Architectural, for requirements on roof slopes or any other criteria not covered below.

17.2 **Steel Roof Decks With Build-Up Or Single Ply Roofing**. The most commonly used (and usually most economical) low-slope roof system consists of build-up roofing or single ply roofing over rigid insulation over steel roof decking supported by steel bar joists. Where the roof framing supports a suspended ceiling, the bar joists are usually spaced at 1.2 meter o.c. in order to simplify the ceiling suspension system. Where sound attenuation is a design requirement or where a rigid diaphragm is needed, structural lightweight concrete may be placed over the steel deck. A minimum slope of 1 vertical to 48 horizontal should be provided for drainage. It is typically more economical to build this slope into the framing rather than using tapered insulation. Built-up roofing should not be used on slopes greater than 1 vertical on 4 horizontal. In

designing steel roof decks, consideration should be given to the following:

17.2.1 For shear diaphragm design, see paragraph 18.1, below.

17.2.2 Minimum deck thickness is 0.85mm (22 ga) for shear diaphragm design.

17.2.3 See Superstructure Note 7, enclosed Plate S4.

17.2.4 Deck selection should include a consideration for construction and maintenance loads per the Steel Deck Institute specification.

17.3 **Concrete Roof Decks**:

17.3.1 Cast-in-place or precast concrete roof decks are acceptable; however, they are usually more costly than steel deck systems and are normally used only where required for fire proofing, sound attenuation or other special considerations.

17.3.2 Diaphragm design considerations are covered in paragraph 18.1 below.

17.4 **Pitched Roofs**.

17.4.1 Asphalt shingles, which are commonly used for roof slopes greater than 1 vertical on 4 horizontal, require a nailable deck for support. Since most military construction must be "protected, non-combustible" or "unprotected non-combustible", plywood decking or other types of wood decking are not usually used. Gypsum planks and so-called "nailable concrete" planks have been used in the past.

17.4.2 An alternative to asphalt shingles is structural standing seam metal roofing. See paragraph 17.5 below.

17.5 **Structural Standing Seam Metal Roof System (SSSMRS)**. SSMRS are composed of metal roof panels supported and/or attached by clips fastened directly to the building structure. The metal panels span between the structural supports to carry snow, dead, live, concentrated loads, and wind loads without additional support from other substrates that may be part of the roofing system. SSSMRS shall be specified through use of guide specification CEGS-07416 in specifications and details on the plans.

17.5.1 Past experience has shown that improperly designed, specified or installed metal roof systems have failed due to: panel buckling, panel sidelap seams (ribs) opening, anchor clips fracturing and fastener pull out, all due to wind uplift. For AE designed buildings, the roof framing system must be designed and detailed to show necessary structural framing members, prulins, or subpurlins to accommodate concealed anchor clip spacing. **Roof Panel Clip attachments to metal decks are not permitted.** The contract drawings will include loading diagrams/tables showing the design wind uplift pressures for all zones as determined by ASCE 7, including external and internal pressures. The contract drawings will also include minimum design live loads and or snow loading diagrams/tables where appropriate. Note: When the SSSMR system is a component of a metal building system, the loading criteria in CEGS 13120 Standard Metal Building Systems will apply.

17.5.2 During Selection of the building framing system it is necessary to consider the support requirements for the standing seam metal roof. See TI 809-29, Structural Considerations for Metal Roofing. The building frame members that support the SSSMR should be perpendicular to the roof slope. If the main structural roof framing system is parallel to the roof slope, then a solution that is compatible with most SSSMRS manufacturers is to provide Z-purlins perpendicular to and supported by and connected to the main framing system.

17.5.3 Steel Joist Institute criteria requires that top chords of joists be laterally supported. Some roofing systems, such as structural standing seam, do not have decks or attachments adequate to provide this support and do not have the structural properties necessary to act as a diaphragm; therefore, a supplementary bracing system is required.

18 **SHEAR DIAPHRAGM DESIGN**:

18.1 **Steel Deck Diaphragms**:

18.1.1 Steel deck diaphragms for both wind-controlled and seismic-controlled designs should be designed in accordance with SDI Diaphragm Design Manual. The designer should compute the maximum diaphragm shear in N/m (PLF) and select a satisfactory deck thickness (0.85mm (22 ga.), min.), type and pattern of connections from the tables in the Diaphragm Design Manual. Working stress allowable capacities from the Diaphragm Design Manual may be increased by 2.0 for use in strength

design. In regions where seismic analysis controls design diaphragm shear, welded connections are required. Note that SDI does not recommend welded side lap connections with 0.85mm (22 gage) deck. This should be done for both 610mm (24 inch) wide panels and 915mm (36-inch) wide panels. The computed maximum shear and selected deck thicknesses and connections should be placed on the drawings (see Superstructure Note 7, Plate S4). It should be noted that the tables in the current Diaphragm Deign Manual, include 0.85mm, 1.0mm and 1.3mm (22, 20 and 18 ga.) thicknesses, only. Values for 1.6mm (16 ga.) and thicker decks will have to be computed from the formulas contained in the Diaphragm Design Manual. It will also be necessary to compute values for 1.3mm (18 ga.) deck for the commonly used roof deck span (joist spacing) of 1.2 meters.

18.1.2 Steel deck diaphragms usually fall in the flexible or semi-flexible category and, as such, will not distribute torsional forces (i.e., diaphragm shear reactions at shear walls or frames will be computed on a tributary area basis, only).

18.1.3 The lateral deflection of steel deck diaphragms which furnish lateral support for masonry walls should be checked against the allowable wall deflection. See Reference TM 5-809-3 for the computation of the allowable deflection for masonry walls. The actual maximum wall deflection is equal to the "story drift" that is the sum of the maximum diaphragm deflection and the average of the deflections of the frames or shear walls on either side of the diaphragm span.

18.1.4 Structural connections of the steel deck diaphragms to the building frame, sidelap connections, perimeter chords, connector plates at ridges, shear struts/collectors buildings to carry loads to shear walls and braced frames and other details for proper behavior of the diaphragm shall be fully designed by the AE and detailed on the contract plans.

18.2 **Precast Concrete Diaphragms**:

18.2.1 Design for both wind and seismic should be in accordance with reference 2.1.8.

18.2.2 Calculations must be included in the design analysis to demonstrate the adequacy of the side connections between neighboring precast elements to transmit shear and connection of the precast concrete diaphragms to the lateral force resisting building framing or shear walls.

18.3 **Shear Struts**:

18.3.1 One common error in design of shear diaphragms is the failure to provide struts where needed to allow uniform shear transfer from the diaphragm. Such cases arise where a shear wall or frame does not extend for the full depth of a diaphragm and at re-entrant corners of "L" and "T" shaped buildings. (In some cases, the floor or roof joist at that location may be sufficient to act as a strut.)

18.3.2 Struts must be designed for the horizontal compressive or tensile loads from the accumulated diaphragm shear as well as vertical loads from the diaphragms.

18.3.3 Connections between struts and shear walls or frames should be designed and detailed.

19. **SPECIAL DESIGN CONSIDERATIONS**:

19.1 **Use of Light Cold Formed Steel Framing.** Subject to design requirements referenced in the following paragraph, cold formed steel framing may be used as studs for interior and exterior walls as non-load bearing partitions and curtain walls carrying lateral loads or load-bearing systems that carry both lateral and vertical loads. Light gage steel framing may be used as joists or fabricated into trusses for support of vertical roof and floor loads.

19.1.1 TI 809-07 and AISI Specifications of The Design of Cold Formed Steel Structural Members will be used as design guidance and CEGS 05400, "Cold Formed Steel Framing" and CEGS 04220, "Non-bearing Masonry Veneer/Steel Stud Walls as the basis for contract specifications.

19.1.2 In accordance with reference TI 909-07 and CEGS 05400, the building structural designer has design responsibility for cold-formed steel systems and this responsibility will not be transferred to the Construction Contractor. The design analysis shall contain design calculations needed to size and for connections for cold formed framing. Contract Drawings shall completely detail the cold formed framing. **The structural designer is responsible for design and all details needed to implement the design for load carrying cold-formed framing system. Contract Plans and/or Specifications shall require all cold formed framing members and details that are not on the Contract Plans and are selected by the Construction Contractor to be submitted for review and approval by the structural designer**.

19.2 **Expansive Soil Areas**. Severe expansive soil conditions exist in the San Antonio area and portions of Fort Sill, Altus AFB, Sheppard AFB, and Fort Hood and in other known areas listed in TM 5-818-7. Design of buildings founded on expansive soil should be based on the criteria listed below. Where it is possible to found the building on a stable stratum such as gravel, rock or a sufficient thickness of compacted engineering fill, the criteria may be neglected.

19.2.1 Foundation. The Foundation Design Analysis (FDA) will indicate the type, or types, of foundation that can be used and will also indicate other special requirements such as carton-formed voids under grade beams and structurally supported first floors over a 150mm (6 inch) (minimum) void. The Foundation Design Analysis will also indicate any potential tensile forces caused by expansive soil, which may require additional vertical reinforcement in drilled piers. If the FDA indicates that the foundation material is expansive and these items are not covered in the FDA, the structural engineer should request guidance from the geotechnical engineer.

19.2.2 Framing. Due to the likelihood of differential movement, a primary consideration in framing selection is flexibility. Steel framing is preferred. Load bearing masonry or precast walls are acceptable, however, masonry walls should be made movement-tolerant by the use of closely spaced control joints. Cast-in-place concrete frames should be used only if a rigid foundation, such as a thick mat, is provided.

19.2.3 Exterior Walls. The flexibility requirement, mentioned above for frames, also applies to walls. Precast concrete panels or insulated metal panels will provide adequate flexibility. Brittle finishes such as stucco or brick veneer should not be used unless panelized by control joints. Long, unbroken runs of masonry should be avoided where possible. Where not possible, control joints should be provided at 5.5 meters o.c., maximum. These structural provisions need to be coordinated with Architectural details on plans.

19.2.4 Interior Partitions. Use metal stud, gypsum board, dry-wall construction where possible. Where brittle finishes must be used, liberal use of control joints is required. Coordinate with Architectural details on plans.

19.2.5 Basements. Basements, especially partial basements, should be avoided if at all possible. Where basements must be provided, the basement floors will be structurally supported over a 150mm (minimum) void; provide perimeter wall drains discharging to a sump; exterior faces of basement walls will be waterproofed. Lateral earth pressure (k) values and special excavation/backfill requirements will be cited in the Foundation Design Analysis. If this information is not available in the FDA, the structural engineer should request guidance from the geotechnical engineer.

19.2.6 Bench Marks. When benchmarks are required on building foundations (to monitor movement) use the detail on Plate S53.

19.2.7 Grading and Drainage. Care must be taken to ensure against ponding of water adjacent to the building foundation. These items should be coordinated with the civil site layout and landscape engineer. Some considerations are:

19.2.7.1 Grade sites to drain surface water well away from the building. This is particularly true for side-hill sites.

19.2.7.2 Do not use planters or shrubs which require frequent watering adjacent to buildings.

19.2.7.3 Areas subject to accidental spillage of water (air-conditioning cooling towers, etc.) should receive special attention to ensure discharge of spillage into storm drains or drainage away from the building.

19.2.8 Utilities. Special consideration should be given to connections, suspension and placement of under floor utility lines to prevent damage due to soil heave. Testing should be done immediately before final acceptance of the building to detect leaks due to disturbance during construction. Roof drains should be carried down the outside of exterior walls where possible. Sewer, water and drain lines in crawl spaces shall be supported clear of the crawl space floor utilizing trenches if necessary. The Foundation Design Analysis will indicate whether special provisions must be made for under floor utilities. In such cases, the mechanical design engineer should be contacted for guidance.

19.3 **Special Concrete Requirements**. To alleviate deterioration of concrete due to sulfate action at White Sands Missile Range, the following requirements should be required by the contract specifications. The AE should contact the supervising district Technical Coordinator for a copy of

special concrete specifications. For all concrete used in foundation construction: (a) coarse and fine aggregates will be washed, (b) calcium chloride or admixtures containing chloride salts will not be used, (c) all concrete will have air entrainment. In addition for all concrete less than 600 mm above finished grade, except for floor slabs within buildings and for concrete used for electrical systems (ducts, manholes, pull boxes, vaults, etc.) will: (a) use Type V cement, (b) have an air content by volume of 5.5 percent plus or minus 1.5 percent, (c) contain an approved type F pozzolan, (d) contain not less than 400kg of cement per cubic meter of concrete (675 lb. (seven sacks) of cement per cubic yard of concrete), (e) not exceed a slump of 75 mm (f) be moist cured for 10 days, and (g) receive a water proofing surface treatment consisting of two coats of linseed oil.

19.4 **Seismic Provisions**. The basic seismic design criteria is contained in reference given in TI 809-04 and FEMA 302 and will be followed subject to the exceptions and clarifications listed below:

19.4.1 The Spectrical Accelerations S_s and S_1 for each base in the Southwestern Division are listed in paragraph 22. Also provided in paragraph 23 and 23.1 is guidance for bases in low seismically areas where seismic analysis does not need to be performed because lateral wind loading will control design.

19.4.2 The design examples contained , in reference given in TI 809-04 appendix H, should be used as guides for presenting the seismic design analysis. See Chapter IX; Design Analysis Chapter 4 for additional guidance on seismic analysis.

19.4.3 Minimum seismic reinforcement must be provided for CMU walls in facilities with a Seismic Design Category of C and higher. This requirement increases the cost of CMU walls making other wall systems more competitive. This should be kept in mind in making wall system selection.

19.5 **Fallout Shelter Spaces**. Addition of fallout shelter spaces may be requested by the using agency as part of a project design. Unless provisions of shelter spaces are included in the programmed amount for a facility, the cost limitation on any special construction measures is 1 percent of the programmed amount. PF 40 provides protection from fallout radiation for basic life safety for a 14 day period while radiation is life threatening. PF 100 is appropriate only for essential facilities which must continue to function during a radiation emergency. Analysis and design of shelter

spaces will be in accordance with the current standards published by the Defense Civil Preparedness Agency. For additional information refer to the reference given in paragraph 2.1.19.

19.6 **Aircraft Hangar Wind Loads**. Southwestern Division policy is to design aircraft hangar and maintenance buildings to resist wind loads resulting from the basic wind speed set forth in reference TI 809-01 with aircraft access doors both open and closed. Deviation from this policy will require a waiver from MACOM or MAJCOM.

19.7 **Monorail Design**. Hoist runway beams and their supporting hangers shall be designed and detailed by the design engineer. Beam design shall be conservative due to the possibility of overloads caused by misuse of the hoist. The criteria given herein is for design of monorails supporting hoists with rated capacity of 8.9 kN (2000 pounds), or smaller.

19.7.1 Except as specified herein, the monorail beam design shall be in accordance with AISC deign specifications taking into account the laterally unsupported length of the beam compression flange. The monorail beam vertical service live load shall be 1.5 times the rated capacity of the hoist, to account for impact and overload, and a lateral load of 0.2 times the hoist rated capacity perpendicular to the beam. The beam shall be designed for the service live load plus dead load of beam and hoist. The vertical beam deflection to length ratio shall be limited to 1/800 with a service live load equal to the rated hoist capacity. An “S shape” beam with channel on top should be used for all but very short spans.

19.7.2 The service live load for hangers supporting the monorail beam shall be 2.0 times the rated capacity of the hoist and a lateral load of 0.2 times the rated hoist capacity perpendicular to the beam. The hangers shall be designed for the service live load plus dead load of the beam and hoist. Monorail beams should be braced for longitudinal forces equal to 0.1 times the rated hoist capacity. Instead of using longitudinal beam bracing, the longitudinal force may be carried by designing the hangers for this longitudinal force in addition to the loads described above.

19.7.3 One load case for design of the building framing supporting the monorail shall be vertical service design load of 1.5 times the rated capacity of the hoist combined with all other live loads and dead loads supported by the framing.

When the monorail is supported by roof framing, a service live loads of 0.5 times the total roof design live load is appropriate for combining with the hoist service load of 1.5 times the hoist rated capacity. When building framing supporting the monorail is open web steel joists, the design engineer shall designate KCS joists or provide a load diagram for custom design by the joist manufacturer. The design shall also assure proper joist loading due to the concentrated loads at the monorail hangers by requiring the hangers to be at the panel points, or adding special joist web or cord reinforcing when the hangers are not at the panel points.

19.8 **Traveling Crane Runway Girders**. Runway girders may be designed as simple or continuous members with certain limitations. Continuous girders should not be used where significant unequal foundation settlement is likely to occur. Where foundations are other than shale or hard rock, check anticipated differential settlement so that the difference is limited to 0.003 L between adjacent supports. Limit live load deflection to span length at mid-span to 1/800. The flanges of crane girders shall be proportioned to resist AISC code lateral forces. For continuous girders limit ratio of length of adjacent spans to 2:1. Connect ends of simply supported girders in such a manner as to allow the ends to rotate under vertical loading. Use adjustable bolted connections for fastening the rail to the girder (welded connections are not permitted).

19.9 **Firewalls**. Fire codes require that 4-hour rated firewalls be self supporting (free standing) and cannot be attached to the building framing on either side for top support unless the framing has a 1-1/2 hour fire rating. If it is not feasible to cantilever a single firewall from the foundation, a double wall may be used with each wall attached to, and supported by, the adjacent building framing. The foundations for such walls must, of course, be designed for the imposed loads. The minimum lateral design load for fire-walls should be 480 Pa unless a portion of the wall is exposed to exterior wind loads. Fire rated walls with less than a 4-hour fire rating (sometimes called "fire partitions") need not be free standing and may be supported by the building framing. Control joints in firewalls should be keyed and caulked with rock wool held in place by mortar (applies to both faces).

19.10 **Antiterrorism/Force Protection.** Security engineering is an important aspect of facility design. Structural measures due to force protection requirements may require the design of

the framing system, wall type and thickness, and structural roof system to form a protective system. DD Form 1391 establishes aggressor tactics and level of protective design and the security engineering associated costs for the project. Project development for the DD 1391 should follow the guidance in TM 5-853-1. Guidance for preparation of the concept design is in TM 5-853-2 and for the final design in TM 5-809-3. Coordination between the facility Architectural designer and structural design engineer is needed early during the lay-out of the building when blast resistant construction is required.

20. **MISCELLANEOUS STRUCTURES**:

20.1 **Manholes, Pullboxes, Surface Inlets, etc.** These structures should comply with details shown in Chapter II, Civil and Chapter VI, Electrical. Concrete strength will be 21 mPa (3000 psi) unless otherwise shown. Precast concrete structures are acceptable and should be used where more economical. H10 design wheel loads will be used except that structures in pavement will be designed for the pavement design wheel loads.

20.2 **Headwalls**. Dimensions of headwalls should be similar to those shown on plates in Chapter II, Civil. Concrete strength will be 21 mPa (3000psi) unless otherwise shown. Keyed construction joints should not be used.

20.3 **Transformer Pads and Condenser Pads**. See Plate S59 for typical structural details. Concrete should be 21 mPa (3000 psi).

20.4 **Retaining Walls and Other Earth Retaining Structures**. Guidance for the design of retaining structures is furnished in EM 1110-2-2501, Retaining and Flood Walls. Lateral earth loads on structures should be based on p = whk where p = lateral pressure, w = wet unit weight of earth 585kg/m^2 (120 pcf) minimum, may be higher in some areas, h = depth of soil and k = coefficient of lateral earth pressure which will be furnished in the Foundation Design Analysis or by geotechnical engineer. Surcharge loads should be included where applicable. In case of high ground water table, investigation should also be made for lateral buoyant earth pressure plus 100 percent hydrostatic pressure at one-third overstress. Where drains or weep holes are provided (see Plate S60), the water table may be assumed to be lowered 50 percent of the difference in the water table and drain elevations. Hydrostatic uplift should also be included. It is considered

acceptable practice to design retaining walls for the following criteria:

20.4.1 The resultant of the vertical and horizontal loads falls within the middle third of the base.

20.4.2 The bearing pressure must not exceed the allowable bearing pressure.

20.4.3 The safety factor against overturning must be at least 1.5.

20.4.4 The sliding safety factor must be at least 1.5. Where a sloping backfill surface occurs, the Geotechnical Engineer should be contacted for adjustment of the design "K" lateral earth pressure factor. It is preferred that the working stress method of design be used with actual (unfactored) loads.

20.5 **Metal Buildings Systems**. Off-the-shelf or custom designed pre-engineered metal buildings are economical and suited to some projects such as shops, small storage or equipment buildings, etc. Use of these buildings should be considered where permitted (or specified) by the using service. Economy is fully realized when all components of the pre-engineered building are utilized, i.e., steel framing, purlins, girts, metal roof, and wall panels. When substitutions are made for any of these basic components, the savings will be reduced. Pre-engineered metal buildings are not recommended when the building geometry and/or architecture is not compatible with the use of continuous frames consisting of fabricated tapered columns and rafters. The following considerations apply:

20.5.1 Foundations and floors should be detailed on the construction drawings.

20.5.2 The building supplier should be allowed minor variations in building dimensions to accommodate off-the-shelf designs.

20.5.3 All loads required for design of the building frames should be specified including wind, seismic and crane loads.

20.5.4 Place applicable pre-engineered building notes from enclosed Plate S5 on the construction drawings. The Engineer of Record shall approve the structural design analysis prepared by the pre-engineered building manufacturer.

20.6 **Storage Tank Foundations**. Foundations for storage tanks shall conform with recommendations in the Foundation Design Analysis, tank manufacturers recommendations, API 640, Welded Steel Tanks for Oil Storage, and minimum requirements shown on Plates S56, S57, and S58.

20.6.1 The width of reinforced concrete ring foundations for vertical tanks on ground shall be designed to support the load from the tank wall and roof plus weight of tank fluid directly above the ring without exceeding the allowable foundation bearing pressure. The ring circumferential reinforcement shall be designed for hoop tension caused by "at rest" lateral earth pressure acting on the inside of the ring, taking into account the surcharge from weight of fluid in the tank. When applicable, the ring shall be designed for stresses resulting from seismic forces combined with the other stresses. See API Standard 650, Welded Steel Tanks for Oil Storage, for seismic forces on tanks.

20.6.2 Foundations for elevated tanks shall be designed for most unfavorable combination from weight of tank, weight of tank contents, and effects from lateral forces due to wind and earthquake.

20.7 **Reinforced Box Culverts**. Box culvert design shall conform to the requirements in AASHTO Standard Specifications for Highway Bridges. Appropriate State Highway Department standard designs that conform to AASHTO specifications may be used.

21. **ENGINEER-OF-RECORD**. The Engineer-of-Record (EOR) for all aspects of structural designs, including connections, for in-house jobs shall be the Chief of the engineering office performing the design. The EOR for all aspects of structural designs, including connections, for Architect-Engineer or Engineer-Architect designs, shall be the principal-in-charge of the design firm. ETL 1110-3-447 sets a policy that the design of structural steel (except for metal building systems), reinforced concrete, precast concrete framing and cladding and their connections (except precast lifting design), and masonry the project designer shall maintain complete design responsibility for members and connections, and not transfer this responsibility to the Construction Contractor. In a like manner TI 5-809-07 and provisions of CEGS 05400 require the project designer to have ultimate design responsibility for design of light gage cold-formed framing.

22.

Basic Wind Speeds, Seismic Spectral Accelerations, Ground Snow Loads

LOCATION	(Note 1) BASIC WIND SPEED Km/hr	(MPH)	(Note 2) SEISMIC ACCELERATIONS S_s g	S_1 g	(Note 3) GROUND SNOW LOAD N/m^2	(PSF)
Altus AFB, OK	145	(90)	0.18	0.06	480	(10)
Amarillo, TX (Pantex)	145	(90)	0.16	0.04	720	(15)
Brooks AFB, TX	145	(90)	0.13	0.04	240	(5)
Dyess AFB, TX	145	(90)	0.08	0.03	720	(15)
Fort Chaffee AR, OK	145	(90)	0.20	0.10	480	(10)
Fort Bliss, TX	145	(90)	0.35	0.10	480	(10)
Fort Hood, TX	145	(90)	0.09	0.05	240	(5)
Fort Polk, LA	165	(100)	0.15	0.07	240	(5)
Fort Sam Houston, TX	145	(90)	0.12	0.04	240	(5)
Fort Sill, OK	145	(90)	0.35	0.09	480	(10)
Goodfellow AFB, TX	145	(95)	0.08	0.03	240	(5)
Kelly AFB, TX	145	(90)	0.13	0.04	240	(5)
Lackland AFB, TX	145	(90)	0.13	0.04	240	(5)
Laughlin AFB, TX	145	(90)	0.08	0.03	0	(0)
Little Rock AFB, AR	145	(90)	0.53	0.19	480	(10)
Lone Star AAP, TX	145	(90)	0.18	0.08	240	(5)
Longhorn AAP, TX	145	(90)	0.18	0.07	240	(5)
Louisiana AAP, LA	145	(90)	0.19	0.09	240	(5)
McAlester AAP, OK	145	(90)	0.20	0.09	480	(10)
Pine Bluff Arsenal, AR	145	(90)	0.42	0.17	480	(10)
Randolph AFB, TX	145	(90)	0.12	0.04	240	(5)
Red River AAP, TX	145	(90)	0.19	0.09	240	(5)
Reese AFB, TX	145	(90)	0.09	0.03	960	(20)
Sacramento Peak, NM	195	(120)*	0.35	0.10	2400	(50)
Sheppard AFB, TX	145	(90)	0.17	0.06	240	(5)
Tinker AFB, OK	145	(90)	0.30	0.09	480	(10)
Vance AFB, OK	145	(90)	0.20	0.07	480	(10)
White Sands, NM (main post only)	145	(90)	0.40	0.10	240	(5)

See notes on following page.

Notes for Wind Speed, Seismic Accelerations, and Snow Load table.

(1) Site specific wind speeds are form TI 809-01. Basic wind speed are 50-year recurrence interval, 3-second gust speed. Design wind pressure should be determined using ASCE 7. (*) indicates special wind region.

(2) Seismic accelerations are based on mapped contours from the National Seismic Hazard Study by the U.S. Geological Survey for the Federal Emergency management Agency. S_s is Spectral Acceleration at 0.2 seconds. S_1 is Spectral Acceleration at 1.0 seconds. Seismic design shall conform with TI 809-04.

(3) Ground snow loads are from TI 809-01. Snow loads on roofs will be in accordance with TI-809-01. The minimum roof Live load of 960 N/m^2 (20 psf) will be satisfactory except when roof slopes can cause drifts and ground snow loads are 720 N/m^2 (15 psf) or more.

23. **Seismic Design Analysis Design Aid**. The Seismic Spectral Accelerations within the Southwestern Division military boundaries are generally low to moderate. Therefore, design for wind loads instead of seismic design analysis requirements will control the required strength of the primary lateral force resisting structural system and other components for many facilities. The Seismic Design Category table that follows in paragraph 23.1 provides the seismic Design Category for each of the three building Seismic Use Groups for each military installation located within CESWD. The Design Categories where determined using the TI 809-04 provisions using the base Seismic Spectral Accelerations listed in paragraph 22 above, and Site Classifications for the base that are listed in the table below. The Site Classifications where based on the general soil properties at each military installation. The Seismic Design Category values where obtained by computing the design spectral response acceleration values, S_{DS} and S_{D1}, at each base for each Seismic Use Group and these where used to select the Seismic Design Category from the TI tables 4-2a and 4-2b. The tabulation may be used to indicate that seismic loading will not control the design of the main lateral force resisting system. Within CESWD no additional seismic analysis is required for the design of the main lateral force resisting system for the facility when the Design Category tabulated below is A or B.

However, all parts of the structure between separation joints shall be interconnected to form a continuous load path and concrete or masonry walls shall be anchored to roof and floors and other members that provide lateral support for the wall or which are supported by the wall. When the Seismic Design Category tabulated is C or higher, a seismic analysis of the lateral force resisting system should be performed. The requirements for basic seismic force resisting structural systems and components required in Chapter 7 of the TI shall be complied with for facilities with Design Categories of C or higher, even for those where seismic loading does not control the design of the lateral force resisting system.

23.1

Seismic Design Category
Design Aid

Location	Site Class (Note 1)	Seismic Use Group (Note 2) I	II	III
Altus AFB, OK	C	A	A	A
Amarillo, TX (Pantex)	D	B	B	C
Brooks AFB, TX	Note 3	A	A	A
Dyess AFB, TX	Note 3	A	A	A
Fort Chaffee AR, OK	C	B	B	C
Fort Bliss, TX	D	C	C	D
Fort Hood, TX	D	B	B	C
Fort Polk, LA	D	B	B	C
Fort Sam Houston, TX	Note 3	A	A	A
Fort Sill, OK	D	C	C	D
Goodfellow AFB, TX	Note 3	A	A	A
Kelley AFB, TX	Note 3	A	A	A
Lackland AFB, TX	Note 3	A	A	A
Laughlin AFB, TX	Note 3	A	A	A
Little Rock AFB, AR	C	C	C	D
Lone Star AAP, AR	D	B	B	D
Longhorn AAP, TX	D	B	B	C
Louisiana AAP, LA	D	C	C	D
McAlester AAP, OK	D	C	C	D
Pine Bluff Arsenal, AR	E	D	D	D
Randolph AFB, TX	Note 3	A	A	A
Red River AAP, TX	D	C	C	D
Reese AFB, TX	Note 3	A	A	A
Sacramento Peak, NM	Note 4	-	-	-
Sheppard AFB, TX	C	B	B	C
Tinker AFB, OK	D	C	C	D
Vance AFB, OK	D	B	B	C
White Sands, NM (main post only)	D	C	C	D

See notes on following page.

Notes for Seismic Design Category - Design Aid table.

No additional seismic analysis is required for the design of the main lateral force resisting system of the facility when its tabulated Design Category is A or B. When its Seismic Design Category is C or higher, a seismic analysis should be performed.

The Design Categories where determined using the TI 809-04 provisions using the base Seismic Spectral Accelerations listed in paragraph 22, and Site Classifications for the base that are listed in the table. The Site Classifications where based on the general soil properties at each military installation. The Seismic Design Category values where obtained by computing the design spectral response acceleration values, S_{DS} and S_{D1}, at each base for each Seismic Use Group and these where used to select the Seismic Design Category from the TI tables 4-2a and 4-2b

(1) See TI 809-04 Table 3-1 for definition of Site Classification.

(2) See TI 809-04 Table 4-1 for selection of the facility Seismic Use Group based on occupancy or function.

(3) Structures located in regions having short period spectral response values, $S_{s,}$ less or equal to 0.15g and values of the 1 second period spectral response acceleration, S_1, less than or equal to 0.04g are permitted to be directly categorized as Seismic Design Category A.

(4) Site Classifications on Sacramento Peak are variable and facilities constructed are typically unoccupied. Designer should select appropriate seismic determinations for design.

APPENDIX A

Plates

Index

Plate	General Information
S1	General Notes
S1A	General Notes Continued
S2	Foundation Notes (Slab-on-Grade)
S3	Foundation Notes (Ribbed-Mat Slab)
S4	Steel Framing Notes
S5	Pre-Engineered Building Notes
S6	Not used
	Reinforcement Lap, Embedment and Cover
S7	Not used
S8	Table A - Reinforcement Tension Laps, and Embedment
S8A	Notes for Table A
S9	Not used
S10	Table B - Concrete Cover
	Pier and Beam Foundation Details
S11	Typical Pier and Column Details
S12	Typical Corner & Intersection Reinforcing
S13	Typical Grade Beam Reinforcing Diagram
S14	Typical Grade Beam Void Details
	Ribbed-Mat Foundation Details
S15	Partial Plan - Frame Construction
S16	Ribbed Mat Foundation Sections
S17	Optional Details of Exterior Beams
S18	Ribbed Mat Foundations - Rib Reinforcement
S19	Ribbed Mat Construction Joint
	Slab-on-Grade Floors
S20	Typical Exterior & Interior Grade Beam
S21	Construction Joint Details
S22	Weakened Plane Joint Details
S23	Engine Generator & Equipment Pads
S24	Typical Floor Trench Details

Index (cont.)

Plate	General Information
	Supported Floor Construction
S25	1st Floor w/Crawl Space
S26	1st Floor w/Carton Forms
S27	1st Floor Monolithic w/Grade Beams
	Supported Floor Construction Cont.
S28	Supported Floor (Bar Joists on Grade Beams)
S29	Supported Floor (Bar Joists on Steel Beams)
S30	Typical Loadbearing Wall 2nd Floor Details
S31	Typical Precast Floor System
	Stoops, Ramps, Etc.
S32	Typical Articulated Stoop
S33	Typical Supported Stoop
S34	Typical Ramp Details
	Basement Details
S35	Basement Wall - Drainage System
S36	Basement Waterproofing Details
S37	Basement Waterproofing
	CMU Walls & Partitions
S38	Joist Anchorage & Base Plate Details
S39	Bridging Anchorage & Rake Connection
S40	Steel Joist & CMU Partition Intersection
S41	Exterior CMU Wall - Connection to Steel Beam
S42	Typical Details of Interior CMU Partitions
S43	Special Control Joint Details
S44	Reinforced CMU Seismic Details Around Openings
S45	Typical Reinforced CMU Seismic Details
S46	Reinforced CMU Seismic Notes
	Metal Stud Wall & Partitions
S47	Metal Stud Partition Lateral Support
	Miscellaneous Building Details
S48	Steel Joist Bottom Chord Loading Detail
S49	Suspended Ceiling Details

Index (cont.)

Plate	General Information
S50	Roof Vent Framing - Steel Construction
S51	Roof Vent - Concrete Construction
S52	Existing Slab Removal & Replacement
S53	Bench Mark Detail
	Perimeter Insulation Details
S54	Perimeter Insulation-Ribbed Mat Slab
S55	Perimeter Insulation-Slab-on-Grade
	Tanks
S56	Fuel Storage Tank - Ring Foundation
S57	Above-ground Steel Storage Tank Foundation
S58	Underground Fuel Storage Tank Foundation
	Equipment Foundations
S59	Condenser or Electrical Foundation Details
	Retaining Walls
S60	Retaining Wall Drainage

GENERAL NOTES:

1. DESIGN LIVE LOADS - TI 809-01 & ASCE 7

ROOF - _____ Pa

FLOORS:
FIRST - _____ Pa
UPPER - _____ Pa
MECHANICAL - _____ Pa
(Corridors, Stairs, Others) - - - - - - - - - - - - _____ Pa

2. WIND LOAD PARAMETERS - TI 809-01 & ASCE 7
BASIC WIND SPEED - - - - - - - - - - - - - - _____Km/h
IMPORTANCE FACTOR - - - - - - - - - - - - - - _____
EXPOSURE CATEGORY - - - - - - - - - - - - - - _____

3. SEISMIC DESIGN PARAMETERS - TI 809-04 & FEMA 302
SEISMIC SPECTRAL ACCELERATIONS
S_s - _____g
S_1 - _____g
SEISMIC USE GROUP - - - - - - - - - - - - - - - - - - _____
SEISMIC DESIGN CATAGORY - - - - - - - - - - - - - - _____
(Add the following when the Seismic Design Catagory is C or higher)
DESIGN SPECTRAL ACCELERATIONS
S_{DS} - _____g
S_{D1} - _____g
RESPONSE MODIFICATION FACTOR FOR
BASIC SEISMIC FORCE RESISTING SYSTEM
R - _____

4. GENERAL CONCRETE NOTES:

CONCRETE FOR BUILDING MEMBERS SHALL HAVE A SPECIFIED COMPRESSIVE STRENGTH OF 21 Mpa (3000 psi), UNLESS OTHERWISE NOTED.

CONCRETE FOR SLABS SUBJECTED TO VEHICULAR WHEEL LOADS SHALL HAVE A SPECIFIED COMPRESSIVE STRENGTH OF 28 Mpa (4000 psi).

NONPRESTRESSED CONCRETE REINFORCEMENT SHALL CONFORM WITH ASTM A 615/615M GRADE 60/420.

REINFORCEMENT LAP SPLICES AND EMBEDMENT LENGTHS SHALL CONFORM TO TABLE A, CLASS B, CASE 2 LENGTHS SHOWN ON DWG _____.
(Designer: See Plate S8 for Table A)

CONCRETE COVER OVER REINFORCEMENT SHALL CONFORM TO THE MINIMUMS REQUIRED BY TABLE B ON DWG. _____. (Designer: See Plate S10 for Table B)

REINFORCEMENT DETAILING AND PLACEMENT SHALL CONFORM TO ACI 318 AND ACI 315.

(See Plate S1A for continuation of GENERAL NOTES)

NOTE TO DESIGNER:

MODIFY NOTES AS REQUIRED WHEN DESIGN CONCRETE STRENGTH IS NOT IN ACCORDANCE WITH GNERERAL NOTE 4. STRUCTURAL DETAILS SHOULD SHOW CONCRETE REINFORCEMENT COVER, LAPS AND EMBEDEMENTS AND CONSTRUCTION JOINT LOCATIONS THAT DO NOT CONFORM TO NOTE 4.

GENERAL NOTES CONTUNUED FROM PLATE S1

CONSTRUCTION JOINTS IN BEAMS ANS SUPPORTED FLOOR SLABS NOT SHOWN ON DRAWINGS SHALL BE PLACED THE CENTER OF A SPAN, WITH JOINT SPACING NOT TO EXCEED 18 m.

SEE FOUNDADITION NOTES (SLAB-ON-GRADE) OR (RIBBED MAT SLAB) FOR THEIR CONSTRUCTION JOINT REQUIREMENTS.

MECHANICAL EQUIPMENT PADS ON FLOOR SLABS SHALL BE 100 MM THICK AND REINFORCED WITH #10 @ 300 mm EW., UNLESS OTHERWISE SHOWN.

5. GENERAL CONCRETE MASONRY NOTES:

HOLLOW CMU UNITS SHALL CONFORM TO ASTM C9 90 TYPE 1. OF THE NOMINAL THICKNESS SHOWN ON THE DRAWINGS.

MORTAR FOR CMU SHALL CONFORM TO ASTM C 270, TYPE S UNLESS OTHERWISE NOTED.

GROUT FOR CMU GROUTED CELLS, LINTELS, COLUMNS, PILASTERS, BOND BEAMS AND BLOCKS WITH EMBEDDED ANCHORS SHALL CONFORM TO ASTM C 476 WITH A MINIMUM COMPRESSIVE STRENGTH OF 14 Mpa (2000psi), UNLESS OTHERWISE NOTED.

CONTROL JOINTS SHALL BE OF THE TYPE AND AT THE LOCATIONS SHOWN ON THE DWGs.

CMU REINFORCING BARS SHALL CONFORM TO ASTM A 615/615M GRADE 60/420. JOINT REINFORCEMENT SHALL BE COLD DRAWN WIRE WITH A MINIMUM OF 9 GAUGE LONGITUDINAL WIRE SIZE, UNLESS OTHERWISE NOTED, WITH THE TYPE AND SPACING AS SHOWN ON THE DWGs OR SPECIFIED.

TENSION AND COMPRESSION LAP SPLICE LENGTH SHALL BE 48 TIMES THE DIAMETER OF THE BAR.

6. SUBSTITUTION OF EXPANSION OR DRILLED AND GROUTED-IN ANCHORS FOR EMBEDDED ANCHORS SHOWN ON THE DRAWINGS WILL NOT BE PERMITTED.

7. THE STRUCTURE SHOULD NOT BE CONSIDERED TO BE STABLE DURING CONSTRUCTION UNTIL ALL ELEMENTS ARE IN PLACE AND CONNECTED. THE CONTRACTOR IS RESPONSIBLE FOR ALL TEMPORARY CONSTRUCTION BRACING REQIRED.

NOTE TO DESIGNER:

DELETE NOTE 5 WHEN NO CMU WILL BE USED FOR CONSTRUCTION

EXPANSION OR DRILLED AND GROUTED-IN ANCHORS SHOULD ONLY BE USED FOR CONNECTIONS OF NEW CONSTRUCTION TO EXISTING FACILITIES

FOUNDATION NOTES: (SLAB - ON - GRADE)

1. DESIGN FOUNDATION BEARING PRESSURE (NET)____kPa.

2. DRILLED PIERS SHALL EXTEND APPROXIMATELY_____ m BELOW EXISTING GRADE INTO_____. THE ACTUAL DEPTH, SHALL BE DETERMINED IN THE FIELD BY THE CONTRACTING OFFICER.

3. PLACE 150 mm CAPILLARY WATER BARRIER AND VAPOR BARRIER UNDER ALL NON-STRUCTURAL FLOOR SLABS ON FILL. EXCEPT AS OTHERWISE NOTED.

4. REINFORCEMENT SHALL BE PLACED 40 mm FROM TOP OF NON-STRUCTURAL SLABS ON GRADE, UNLESS OTHERWISE NOTED.

5. FLOOR SLAB CONSTRUCTION JOINTS (C. J.) SHALL BE PLACED AS SHOWN ON FOUNDATION PLANS.

6. FLOOR SLAB ISOLATION JOINTS SHALL BE 1.46 kg (30#) FELT, UNLESS OTHERWISE NOTED.

7. FOR CONSTRUCTION JOINT AND WEAKENED PLANE JOINT DETAILS. SEE SHEET_____ OF_____.

8. CONCRETE FLOOR SLAB ON GRADE MAY BE PLACED IN LANES. SPACING OF JOINTS SHALL BE AS SHOWN ON THE FOUNDATION PLAN. WHEN LANE PLACEMENT IS USED, CONSTRUCTION JOINTS SHALL BE USED FOR THE JOINTS BETWEEN LANES. SAW CUT WEAKENED PLANE JOINTS SHALL BE PROVIDED ACROSS EACH LANE AT SPACING SHOWN ON PLANS.

9. ALL EXTERIOR GRADE BEAMS SHALL BE CHAMFERED 15mm ON THE EXTERIOR EXPOSED CORNER.

10. FILL:

    A. ALL FILL PLACED UNDER BUILDING SLABS SHALL BE COMPACTED TO NOT LESS THAN 92 % MAX. DENSITY ACCORDING TO ASTM D 1557.

    B. REMOVE_____ OF EXISTING MATERIAL AND REPLACE WITH NON - EXPANSIVE FILL UNDER THE 150 mm CAPILLARY WATER BARRIER.

11. ALL GRADE BEAMS SUPPORTED BY DRILLED PIERS OR PILES SHALL HAVE VOIDS UNDER THEM. (SEE DETAILS)

NOTE TO DESIGNER:

DELETE NOTE 11, WHEN NOT REQUIRED BY THE FOUNDATION DESIGN ANALYSIS.

FOUNDATION NOTES: (RIBBED MAT SLAB)

1. DESIGN FOUNDATION BEARING PRESSURE (NET) _____ kPa.

2. PLACE 150 mm CAPILLARY WATER BARRIER AND VAPOR BARRIER UNDER ALL SLABS. EXCEPT AS OTHERWISE NOTED.

3. CONSTRUCTION JOINTS (C. J.) SHALL BE PLACED IN LANES THRU SLABS AND BEAMS AND SAW CUT JOINTS IN SLABS PERPENDICULAR TO THE LANES AT THE SPACING SHOWN ON THE FOUNDATION PLAN.

4. CONCRETE CLEAR COVER OVER SLAB REINFORCEMENT SHALL BE 40 mm $\leq$ T/4 $\leq$ 65 mm FROM THE TOP OF THE SLAB UNLESS OTHERWISE NOTED. (T = SLAB THICKNESS)

5. FILL:

   A. ALL FILL PLACED UNDER BUILDING SLABS SHALL BE NON-EXPANSIVE AND SHALLL BE COMPACTED TO NOT LESS THAN 92 % MAXIMUM DENSITY ACCORDING TO ASTM D 1557, METHOD D.

   B. REMOVE _____ OF EXISTING MATERIAL AND REPLACE WITH NON-EXPANSIVE FILL UNDER THE 150 mm CAPILLARY WATER BARRIER.

STEEL FRAMING NOTES

1. UNLESS OTHERWISE SPECIFIED, HOT- ROLLED STEEL BUILDING MEMBERS USING W-SHAPES SHALL BE ASTM A992 OR A572 GRADE 50 WITH AISC TECHNICAL BULLETIN # 3 SPECIAL REQUIREMENTS, M-, S-, AND CHANNEL SHAPES ASTM A572 GRADE 50, SQUARE, RECTANGULAR & ROUND HSS SHAPES ASTM A 500 GRADE C, ANGLES AND MISSACELENOUS STIFFNER PLATES ASTM A 36.

2. ALL SHEAR CONNECTIONS NOT DETAILED OR OTHERWISE NOTED SHALL BE STANDARD AISC WELDED OR AISC BOLTED CONNECTIONS AND SHALL HAVE SUFFFICIENT CAPACITY TO SUPPORT (THE END REACTION SHOWN ON THE DRAWING) OR (THE END REACTIONEQUAL TO ONE - HALF THE TOTAL UNIFORM LOAD CAPACITY SHOWN IN THE ALLOWABLE UNIFORM LOAD TABLES IN PART 2 OF THE AISC ALLOWABLE STRESS DESIGN MANUAL).

3. WELDING SHALL CONFORM WITH AWS D1.1 STRUCTURAL WELDING CODE.

4. ALL BOLTS FOR BEAM CONNECTIONS SHALL BE ASTM A325M WITH A MINIMUM DEAMETER OF 16 mm. UNLESS OTHERWISE NOTED. ALL BOLTED CONNECTIONS SHALL BE BEARING TYPE CONNECTIONS, UNLESS NOTED AS SLIP CRITICAL. WASHERS SHALL BE INSTALLED UNDER NUTS OF FASTENERS WHEN REQUIRED BY THE SPECIFICATION FOR STRUCTURAL JOINTS.

5. ALL ANCHOR RODS SHALL BE ASTM F1554, Grade 55, UNLESS OTHERWISE NOTED.

6. UNLESS OTHERWISE NOTED, ALL JOISTS, PURLINS OR SUBPURLINS SUPPORTING THE ROOF DECK SHALL BE FIELD WELDED TO SUPPORTING MEMBERS OR TO PRESET BEARING PLATES.

7. STEEL ROOF DECK SHALL BE 38 mm DEEP WR_____mm THICKNESS. STANDARD METAL DECKING SHALL BE ASTM A653 SQ GRADE 230 MPa WITH G60 METAL DECKING. DECKING SHALL BE CONTINUOUS OVER AT LEAST THREE (3) SUPPORTS EACH DECKING PANEL SHALL BE ATTACHED TO SUPPORTING MEMBERS AND ADJACENT PANELS BY 16 mm DIAMETER WELDS AS INDICATED BELOW FOR THE APPLICABLE PANEL WIDTH. IF OTHER PANEL WIDTHS ARE USED. CONTRACTOR MUST PROVIDE WELD SPACING TO PROVIDE EQUIVALENT SHEAR STRENGTH AND STIFFNESS.

	610 mm PANEL	915 mm PANEL
NO. OF END AND SUPPORT WELDS	_____	_____
SPACING OF SIDELAP & EDGE WELDS	_____ mm O. C.	_____ mm O. C.

WELDS SHALL BE USED FOR SEISMIC DESIGN CATEGORY C OR HIGHER. SCREWS, POWER ACTURATED FASTENERS, OR PNEUMATICALLY DRIVEN FASTENERS MAY BE USED FOR SEISMIC DESIGN CATEGORY A AND B AND FOR DESIGN WIND SPEED LESS THAN 160 Km/hr PROVIDED THE TYPE, SIZE, LENGTH, AND SPACING OF THE FASTENERS ARE SHOWN TO PROVIDE, AS A MINIMUM. THE SAME SHEAR, UPLIFT, AND STIFFNESS VALUES AS THE WELDED PATTERN INDICATED ABOVE. THE REQUIRED SUPPORTING CALCULATIONS AND DATA SHALL BE BASED UPON THE STEEL DECK INSTITUTE'S DIAPHRAGM DESIGN MANUAL. SIDELAP WELDING IS NOT RECOMMENDED FOR 0.85 mm thick DECKS.

8. SUBPURLINS SHALL BE DESIGNED TO SUPPORT LOADS SHOWN WITH DEFLECTIONS LIMITED TO L/240. WHERE L = CLEAR SPAN .

9. BETWEEN PANEL POINTS OF STEEL JOISTS, THE BOTTOM CHORD SHALL NOT SUPPORT OVER 225 N. VERTICAL LOAD WITHOUT ADEQUATE REINFORCING OF BOTTOM CHORD. NO VERTICAL LOAD SHALL BE IMPOSED ON BRIDGING.

10. CONCRETE SLABS ON METAL FORM SHALL BE 80 mm STRUCTURAL CONCRETE AND REINFORCED WITH 6X6 - W2, 9XW2. 9 - W. W. F. OR EQUIVALENT REINFORCING STEEL THE METAL FORM SHALL BE GALVANIZED AND SHALL HAVE A MINIMUM YIELD STRENGTH OF 345 MPa. USE FLOOR HARDENER ON EXPOSED FLOORS.

PRE - ENGINEERED METAL BUILDING NOTES:

1. THE BUILDING SHALL BE A MANUFACTURER'S STANDARD PREFABRICATED METAL STRUCTURE OF THE APPROXIMATE INSIDE AREA SHOWN. EXCEPT AS NOTED. RIGID FRAMES SHALL BE SPACED AT _____ CTR. TO CTR., BUT OVERALL DIMENSIONS AND CONSTRUCTION DETAILS MAY VARY TO SUIT MANUFACTURER'S STANDARD DESIGN. HOWEVER, MINIMUM WEB THICHNESS OF RIGID FRAMES SHALL BE 4.8 mm.

2. THE BUILDING SHALL BE DESIGNED AND FABRICATED ACCORDING TO THE CONTRACT SPECIFICATIONS, AISC, MBMA AND AISI LATEST SPECIFICATIONS. AMERICAN INSTITUTE OF STEEL CONSTRUCTION CERTIFICATION IS REQUIRED OF THE METAL BUILDING SYSTEM MANUFACTURER AND A CERTIFICATE TO VERIFY COMPLIANCE SHALL BE SUBMITTED WITH THE DESIGN ANALYSIS. THE DIMENSIONAL TOLERANCES OUTLINED IN THE AWS CODE UNDER WORKMANSHIP AND THE TOLERANCES APPICABLE TO HOT ROLLED STEEL UNDER THE AISC "STANDARD MILL PRACTICE" , SECTION SHALL BE REQUIRED IN THE FABRICATION OF THE STEEL BUILDING FRAMES.

** 3. THE BUILDING FRAME SHALL BE DESIGNED TO LIMIT THE LATERAL DEFLECTION TO _____ mm AT THE BUILDING EAVE FOR A BASIC WIND SPEED OF _____ Km/h.

4. A COMPLETE DESIGN ANALYSIS SHOWING ALL CALCULATIONS FOR THE RIGID FRAMES, GIRTS, PURLINGS AND X-BRACING FOR WIND AND SEISMIC LOADS AND A LAYOUT OF ANCHOR BOLTS AND OTHER EMBEDED ITEMS SHALL BE SUBMITTED FOR APPROVAL WITH THE ALL MAIN MEMBERS. TYPICAL CONNECTIONS (SHOWING BOLT HOLES AND WELDS), AND ERECTION DRAWINGS.

5. THE BUILDING SHALL BE DESIGNED TO SUPPORT ALL MECHANICAL EQUIPMENT INCLUDING HEATERS, SPRINKLERS, EXHAUST SYSTEMS AND ALL OTHER SUCH DEVICES. ADDITIONAL GIRTS OR PURLINS SHALL BE PLACED IN CONVENIENT LOCATIONS FOR ATTACHMENT OF ALL MECHANICAL EQUIPMENT.

6. DESIGN LOADS SHALL CONFORM WITH LIVE LOADS, WIND LOAD AND SEISMIC LOAD PARAMETERS GIVEN IN THE GENERAL NOTES PLUS COLLATERAL DEAD FROM MECHANICAL EQUIPMENT, CEILINGS, SPRINKLERS AND CRANE LOADS AS APPLICABLE. LOAD COMBINATIONS AND DESIGN STRESSES SHOULD COMPLY WITH AISC SPECIFICATIONS FOR STRUCTURAL STEEL BUILDINGS.

7. RIGID FRAME ANCHOR BOLTS SHALL BE DESIGNED AND FURNISHED BY THE CONTRACTOR. BOLTS SHALL BE DESIGNED BY A PROFESSIONAL ENGINEER FOR THE FRAME REACTIONS FURNISHED BY THE METAL BUILDING MANUFACTURER. THE ANCHOR BOLT DESIGN ANALYSIS SHALL BE SUBMITTED FOR APPROVAL.

8. BUILDINGS WITH SEISMIC DESIGN CATEGORY OF C OR HIGHER SHALL NOT USE METAL PANEL WALLS AND ROOF AS A DIAPHRAGM DIAPHRAGMS FOR BUILDINGS WITH SEISMIC DESIGN CATEGORY OF A OR B MUST BE A MINIMUM OF 0.85 mm THICKNESS. LOAD TEST ON METAL PANEL WALL AND ROOF ASSEMBLIES TO BE USED AS A DIAPHRAGM MUST BE SUBMITTED.

NOTE TO ENGINEER: GUIDE SPECIFICATION CEGS 13120 STANDARD METAL BUILDING SHALL BE USED FOR PREPARATION OF CONTRACT SPECIFICATIONS.

** NOTE 3: ON DRIFT MAY BE DELETED FOR UTILITARIAN BUILDINGS WITH METAL SIDING. DRIFT FOR BRICK VENEER CLADDING EQUAL H/600 FOR 10 YR WIND. DRIFT FOR REINFORCED CMU EQUAL H/400 FOR 10 YR WIND.

TABLE A - REINFORCEMENT TENSION LAPS, AND EMBEDMENT

fy = 420 MPa (60000 psi), f'c = 21 MPa (3000 psi)

BAR SIZE	BAR DIA (mm)	EMBEDMENT AND CLASS A LAP (mm)				CLASS B LAP (mm)			
		TOP BAR		OTHER BARS		TOP BAR		OTHER BARS	
		CASE 1	CASE 2	CASE 1	CASE 2	CASE 1	CASE 2	CASE 1	CASE 2
10	9.5	560	815	435	635	715	1070	560	815
13	12.7	740	1095	560	840	940	1425	740	1095
16	15.9	915	1375	715	1045	1195	1880	915	1375
19	19.1	1095	1625	840	1270	1425	2135	1095	1625
22	22.2	1600	2390	1220	1830	2060	3100	1600	2390
25	25,4	1830	2720	1400	2085	2365	3530	1830	2720
29	28.7	2060	3075	1575	2365	2670	3990	2060	3075
32	32.3	2315	3455	1780	2670	3000	4500	2315	3455
36	35.8	2565	3835	1985	2950	3330	4980	2565	3835

SEE PLATE S8A FOR NOTES FOR USE WITH TABLE A
NOTE: BAR SIZE DESIGNATION ARE IN METRIC SYSTEM SI UNITS .

NOTES FOR USE WITH TABLE A

1. TABLE A PRESENTS LENGTHS OF TENSION DEVELPMENT LENGTHS AND TENSION LAP SPLICE LENGTHS BASED ON ACI 318-95, SECTION 12.2.2.
2. CLASS A LAP LENGTHS APPLY WHEN BAR LAPS ARE STAGGERED TO LAP HALF THE BARS AT THE SAME LOCATION OR WHEN BARS ARE LAPPED AT A LOCATION WHERE THE REINFORCEMENT AREA PROVIDED IS AT LEAST TWICE THAT REQUIRED.
3. CLASS B LAP LENGTHS APPLY WHEN ALL BARS ARE SPLICED AT A LOCATION OF MAXIMUM STRESS IN THE BARS.
4. CASE 1 LENGTHS APPLY TO BEAMS AND COLUMNS WITH CONCRETE COVER EQUAL OR GREATER THAN THE BAR DIAMETER, CLEAR BAR SPACING EQUAL OR GREATER THAN THE BAR DIAMETER AND WITH STIRRUPS OR TIES NOT LESS THAN THE CODE MINIMUM THOROUTHOUT THE LENGTH IN THE TABLE; AND FOR OTHER ELEMENTS WITH CONCRETE COVER EQUAL OT GREATER THAN THE BAR DIAMETER AND CLEAR SPACING EQUAL OR GREATER THAN TWO TIMES THE BAR DIAMETER.
5. CASE 2 LENGTHS APPLY TO BEAMS AND COLUMNS WITH CONCRETE COVER LESS THAN THE BAR DIAMETER, AND CLEAR BAR SPACING LESS THAN THE BAR DIAMETER; AND FOR OTHER ELAMENTS WITH CONCRETE COVER LESS THAN THE BAR DIAMETER AND CLEAR BAR SPACING LESS THAN TWO TIMES THE BAR DIAMETER.
6. TOP BARS ARE HORIZONTAL REINFORCEMENT PLACED SO THAT MORE THAN 30 cm OF CONCRETE IS CAST BELOW THE REINFORCEMENT.
7. MULTIPLY LENGTHS SHOWN BY 0.87 FOR 28 MPa (4000 psi) CONCRETE.
8. MULTIPLY LENGTHS SHOWN BY 1.3 FOR LIGHTWEIGHT AGGREGATE CONCRETE.
9. MULTIPLY LENGTHS SHOWN BY 1.3 FOR EPOXEY-COATED BARS.

NOTES TO DESIGN ENGINEER:

(1) TABLE A DOES NOT COVER HOOKED BARS, EMBEDMENT OR SPLICE LENGTHS FOR BUNDLED BARS AND COMPRESSION BARS. PLANS SHALL DETAIL REINFORCEMENT HOOKS, LAPS AND EMBEDMENTS NOT COVERED BY THE TABLE; AND WHERE THE CLASS AND/OR CASE IS NOT CLEAR.

(2) THE DESIGNER SHALL VERIFY THAT PRACTICAL AND CONSTRUCTIBLE LAPS AND EMBEDMENTS WILL RESULT IN MEMBERS WHEN REINFORCEING STEEL SHOWN ON PLANS IS DETAILED WITH THE LAPS AND EMBEDMENT LENGTHS SHOWN IN TABLE A.

TABLE B
CONCRETE COVER (mm) FOR CAST-IN-PLACE NON-PRESTRESSED CONCRETE FOR BUILDINGS

DESCRIPTION		SINGLE LAYER	TWO LAYERS TOP	TWO LAYERS BOTTOM	REMARKS
SLABS	ON GRADE	40 FROM TOP	① 20	80	① 40 WHEN EXPOSED TO WEATHER
	OF RIBBED MATS	②			② T/4 (40 < T/4 < 65)
	SUPPORTED	20 FROM BOT.	20	20	T = SLAB THICKNESS
	ON CARTON FORMS	40 FROM BOT.	20	40	
	ON CONCRETE	CENTERED			
	ON METAL DECK	CENTERED			
WALLS	INTERIOR FACES	CENTERED	20		
	EXTERIOR EXPOSED FACE	CENTERED	③ 40		③ 50 FOR #19 AND LARGER OR EXPOSED TO EARTH

DESCRIPTION		SIDE	TOP	BOTTOM	REMARKS
BEAMS	FORMED GRADE BEAMS	50	40	④ 50	④ 80 IF CAST ON EARTH
	IN RIBBED MATS	80	40	80	
	ABOVE GRADE	40	40	⑤ 40	⑤ 50 FOR #19 AND LARGER WHEN EXPOSED TO WEATHER
OTHER	JOISTS	20	20	20	
	SPOT FOOTINGS	⑥ 40	⑥ 40	80	⑥ 50 FOR #19 AND LARGER WHEN
	DRILLED PIERS	80	---	---	
	COLUMNS AND PLINTHS	⑦ 40	---	---	⑦ 50 FOR #19 AND LARGER WHEN EXPOSED TO WEATHER

NOTE: UNLESS OTHERWISE NOTED ON DRAWINGS, CONCRETE COVER OVER PRIMARY REINFORCEMENT, TIES, STIRRUPS AND SPIRALS SHALL COMPLY WITH LISTED VALUES. COVER SHALL COMPLY WITH REQUIREMENTS OF ACI 318M FOR ELEMENTS NOT DESCRIBED.

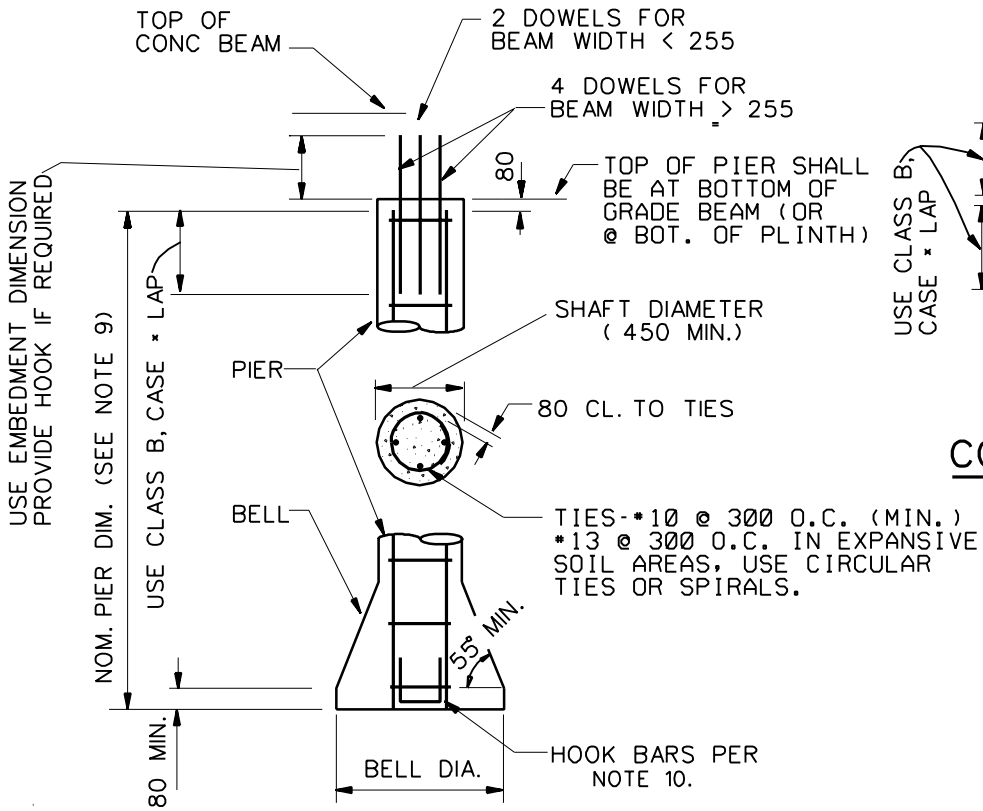

PIER DETAIL

- NO SCALE -

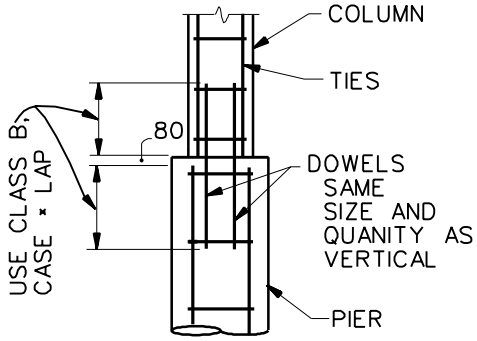

COLUMN DETAIL

PER DESIGN NOTES:

1. USE 21 MPa (3000psi.) CONCRETE, SEE GENERAL NOTE 2, PLATE 4.
2. USE 100 mm TO 150 mm (4" TO 6") SLUMP CONCRETE AND 20 mm AGGREGATE TO FACILITATE CONCRETE PLACEMENT, VIBRATE ONLY TOP 1500 mm OF PIER. (IEIT SPECS ACCORDINGLY).
3. DESIGN PIER AS A SHORT TIED COLUMN.
4. VERTICAL REINFORCING IN PIERS TO BE ASTM A615M, A616M OR A617M GRADE 420.
5. MINIMUN SHAFT SIZE IS 450mm (18") FOR PIERS UP TO 12 METERS DEEP AND 600mm (24") FOR PIERS LONGER THAN 12 METERS.
6. TO FACILITATE CONCRETE PLACEMENT, USE THE MINIMUM NUMBER OF HEAVY BARS (NOT LESS THAN FOUR [4]).
7. KEEP BELL SIZE IN INCREMENTS OF 150mm (SUCH AS 900 Dia, 1070 Dia, ETC.) TO ENABLE MACHINE BELLING. "D" NOT TO EXCEED 3 X PIER SHAFT DIAMETER ("D"); LARGER BELLS MEAN HANDLING AT HIGHER COST.
8. PIER SIZE AND REINF. MAY BE REDUCED IN SPECIAL CASES SUCH AS PORCHES FOR HOUSING, ETC. ABSOLUTE MINIMUM 300mm Dia PIER WITH 1-*16 VERTICAL BAR.
9. PIER LENGTH FOR ESTIMATING PURPOSES SHALL BE FROM BOTTOM OF PIER TO BOTTOM OF GRADE BEAM OR STUB COLUMN, ACTUAL PIER LENGTH DETERMINED IN FIELD BY CONTRACTING OFFICER.
10. WHERE REINFORCEMENT CARRIES TENSION DUE TO WIND OR SEISMIC LOADS OR SOIL HEAVE, REINFORCEMENT MUST BE DEVELOPED AT THE TOP AND BOTTOM OF THE PIER USING HOOKS OR EMBEDMENT LENGTHS INTO THE GRADE BEAM AND BELL.

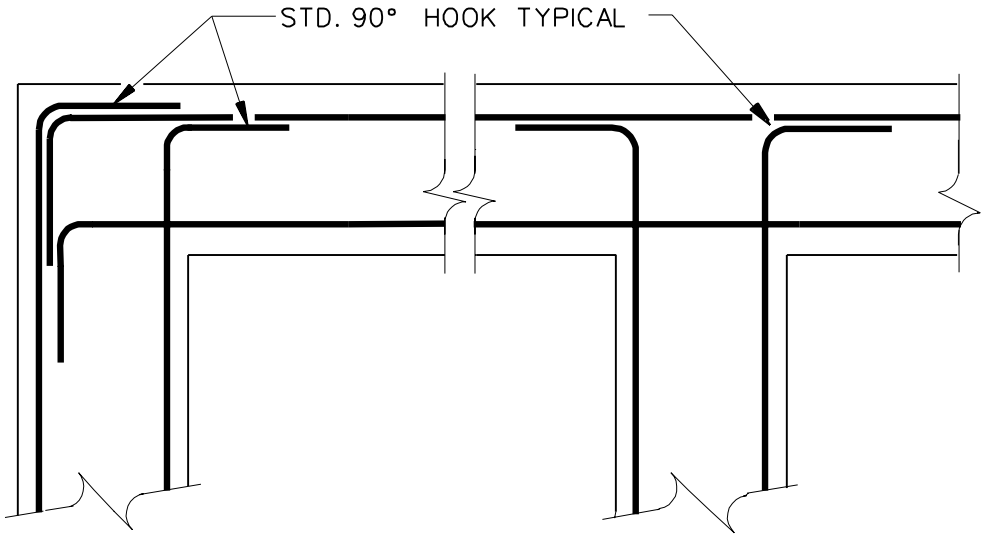

TYPICAL CORNER & INTERSECTION REINFORCING

FOR CONCRETE BEAMS AND WALLS SEE PLATE S18 FOR RIBBED MAT FOUNDATIONS.

NOTES:

(1) REINFORCING SHOWN APPLIES TO TOP, BOTTOM AND INTERMEDIATE BARS.

(2) THE HOOKED BARS SHOWN MAY BE REPLACED WITH HOOKED BARS THAT HAVE A CLASS A LAP WITH STRAIGHT BARS IN THE BEAM OR WALL AT THE CONTRACTORS OPTION.

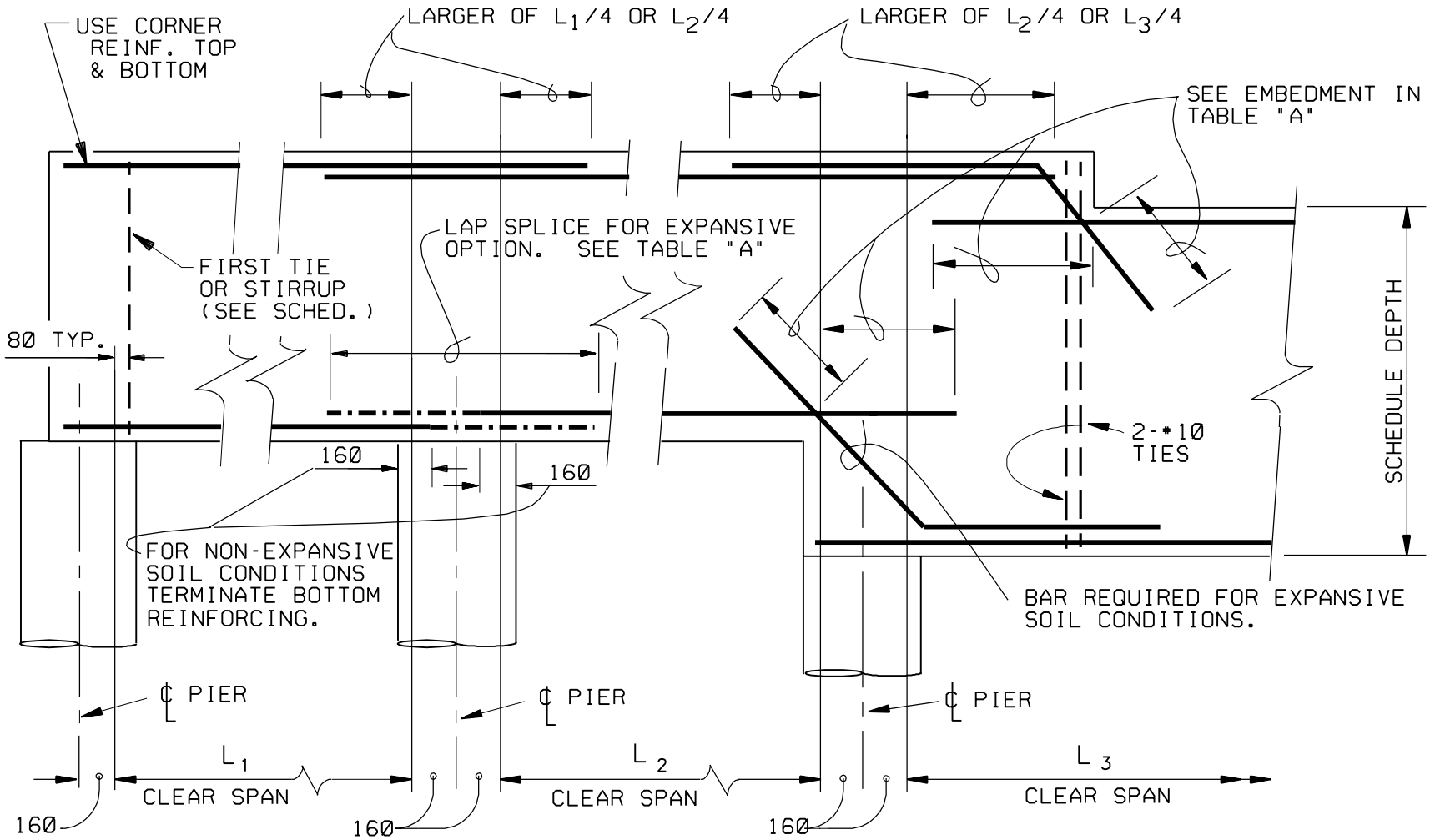

TYPICAL GRADE BEAM REINFORCING DIAGRAM

NOTE: TO DESIGNER:

IN EXPANSIVE SOIL AREAS, TOP AND BOTTOM REINF. SHOULD BE CONTINUOUS DUE TO POSSIBLE FOUNDATION MOVEMENT. CONTINOUS TOP BAR SPLICES SHALL OCCUR AT MID-SPAN AND BE CLASS A.

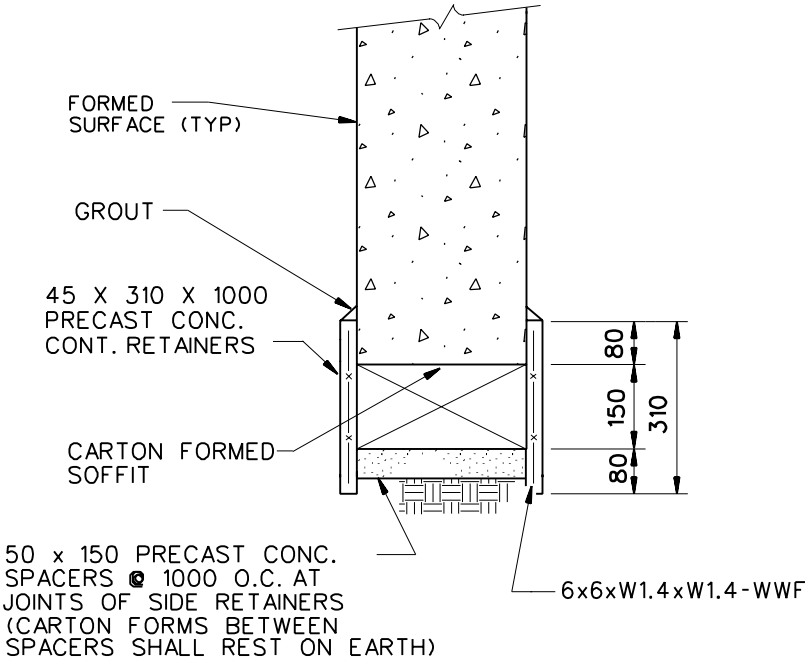

TYPICAL GRADE BEAM VOID

AT SLAB ON GRADE

- No Scale -

DESIGN NOTE:

PRECAST CONCRETE RETAINER SHOWN IS NOT ADEQUATE FOR EARTH FILL HEIGHTS GREATER THAN 1200 mm FOR GREATER HEIGHTS THE DESIGNER MUST DESIGN THE RETAINER AND SOIL PENETRATION FOR ACTUAL FILL PRESSURES. RETAINERS MAY NOT BE REQUIRED IN LOW EXPANSION SOILS, VOIDS MAY NOT BE REQUIRED IN NON-EXPANSIVE SOILS, SEE FOUNDATION RECOMMENDATIONS

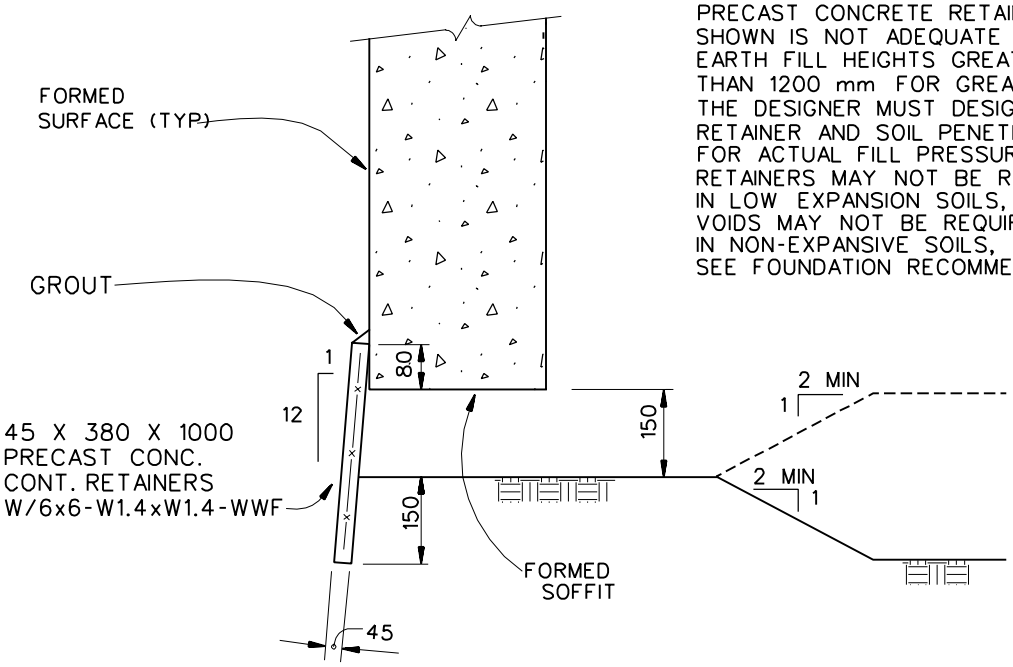

TYPICAL GRADE BEAM VOID

AT FOUNDATIONS WITH CRAWL SPACE

RIBBED MAT FOUNDATION

(EXAMPLE)

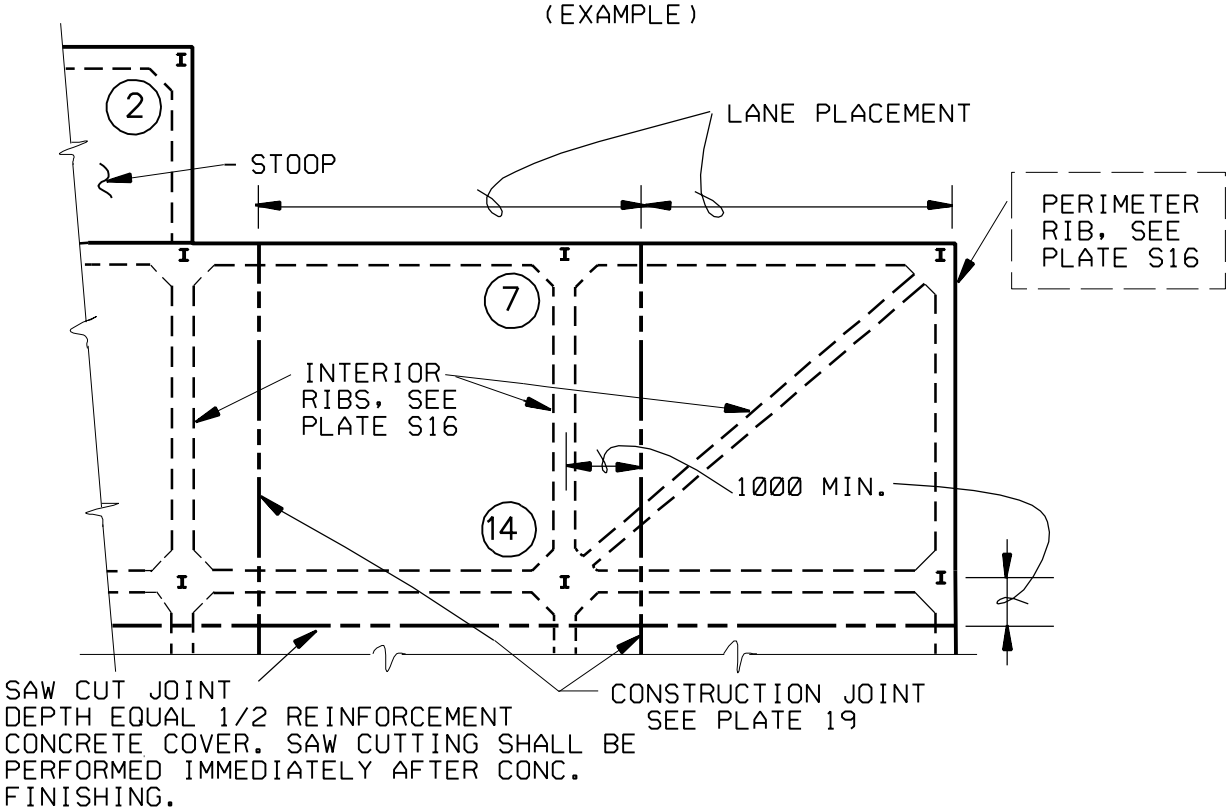

PARTIAL PLAN-FRAME CONSTRUCTION

(SHOWING ENLARGED RIB INTERSECTIONS FOR COLUMN FOOTINGS).

NOTE TO DESIGNER:

* DIMENSIONS SHOWN ARE MINIMUMS. USE LARGER DIMENSIONS IF REQUIRED FOR COLUMN LOADS.

FOOTING SCHEDULE

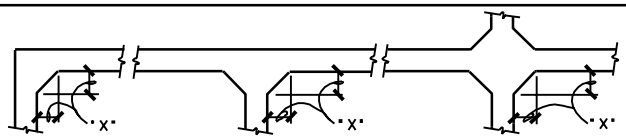

TYPE "A" TYPE "B" TYPE "C"

	MARK	2	7	14
	TYPE	"A"	"B"	"C"
*	DIM. "X" (MIN.)	300	300	300

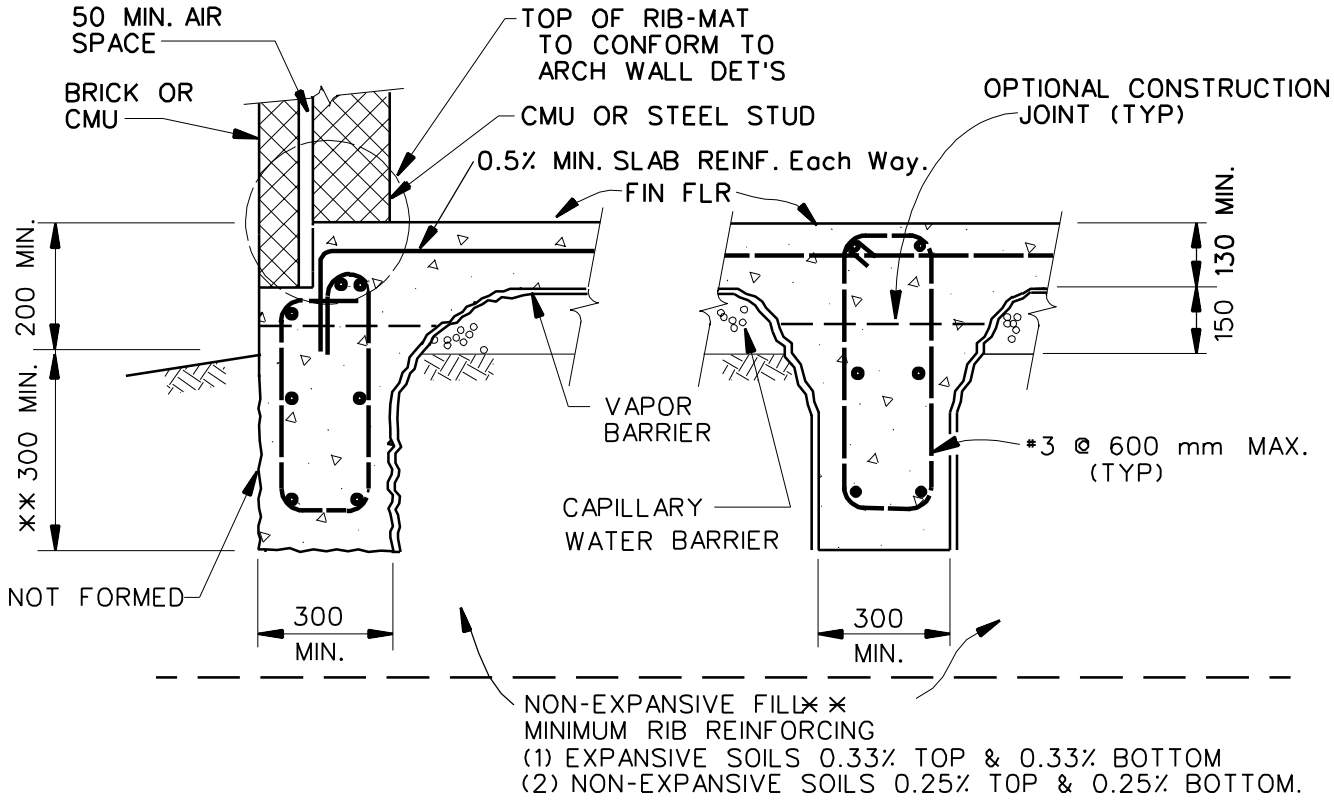

PERIMETER BEAM
(Bearing Wall)

INTERIOR RIB

** SEE FOUNDATION DESIGN ANALYSIS FOR RIB DEPTH, BELOW OUTSIDE GRADE, NON-EXPANSIVE FILL REQUIREMENTS, ETC.

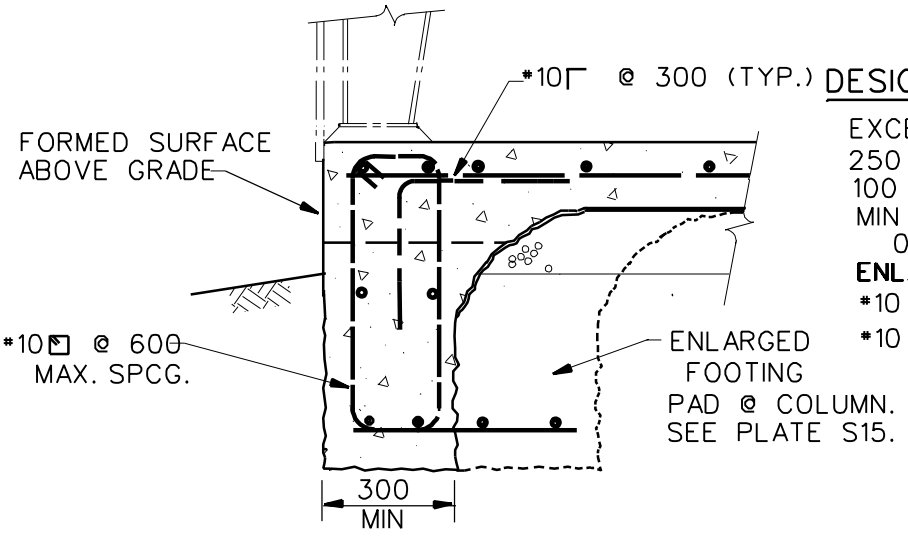

PERIMETER BEAM
(RIGID FRAME)

DESIGN NOTES:

EXCEPTIONS FOR FAMILY HOUSING:
250 mm MIN. RIB WIDTH
100 mm MIN. SLAB THICKNESS
MIN RIB REINF. 0.25% TOP & 0.25% BOTTOM.

ENLARGED FOOTING NOT REQUIRED
#10 @ 600 mm NOT REQUIRED.
#10 @ 600 mm, SLAB TO PERIMETER RIBS.

RIBBED MAT FOUNDATION SECTIONS

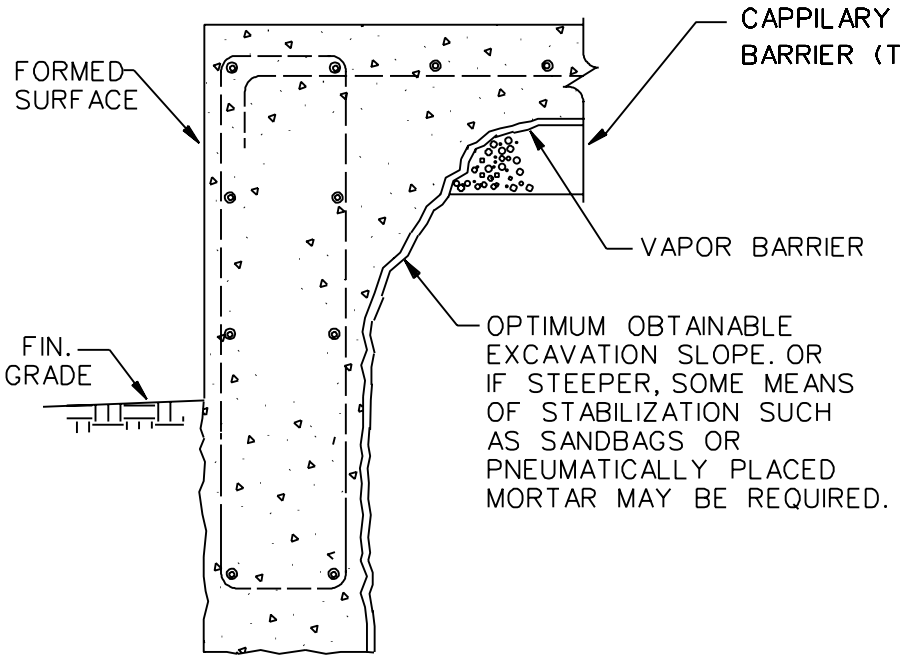

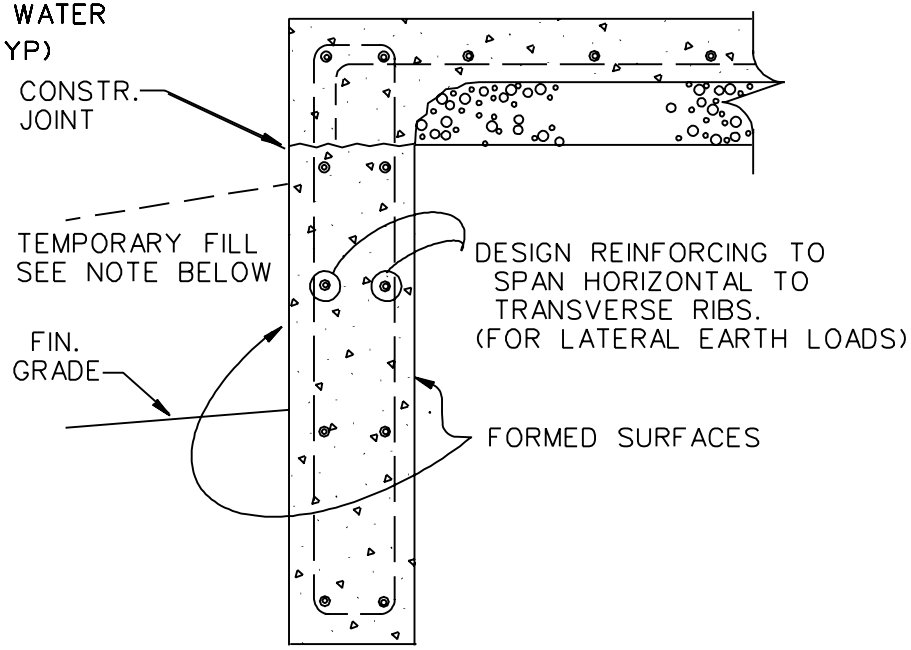

NOTE:

BACKFILL EACH SIDE OF RIB SIMULTANEOUSLY. LEAVE TEMPORARY BACKFILL IN PLACE UNTIL SLAB IS PLACED.

OPTIONAL CONSTRUCTION DETAILS OF EXTERIOR RIBS FOR RIBBED MAT CONSTRUCTION

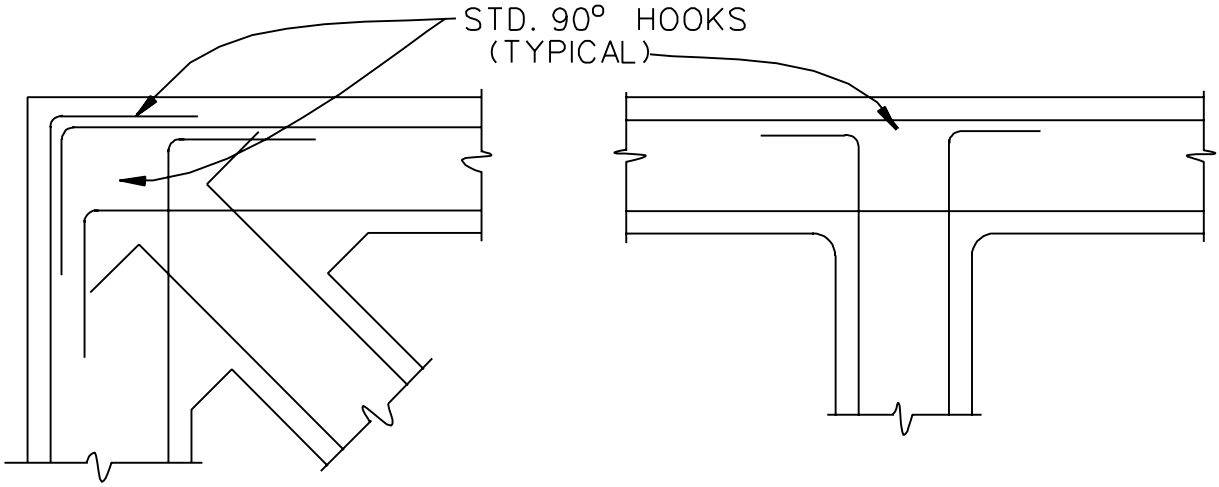

CORNER

INTERSECTION

NOTES:

1. REINFORCING SHOWN APPLIES TO TOP, BOTTOM AND INTERMEDIATE BARS.
2. SEE TABLE "A" FOR SPLICE REQUIREMENTS.
3. THE STANDARD 90° HOOKS ON DIAGONAL AND TRANSVERSE RIB REINFORCEMENT MAY BE VERTICAL RATHER THAN HORIZONTAL.
4. THE HOOKED BARS SHOWN MAY BE CHANGED TO HOOKED BENT BARS THAT LAP WITH STRAIGHT BARS IN THE CONTRACTOR's AT THE CONTRACTOR's OPTION.

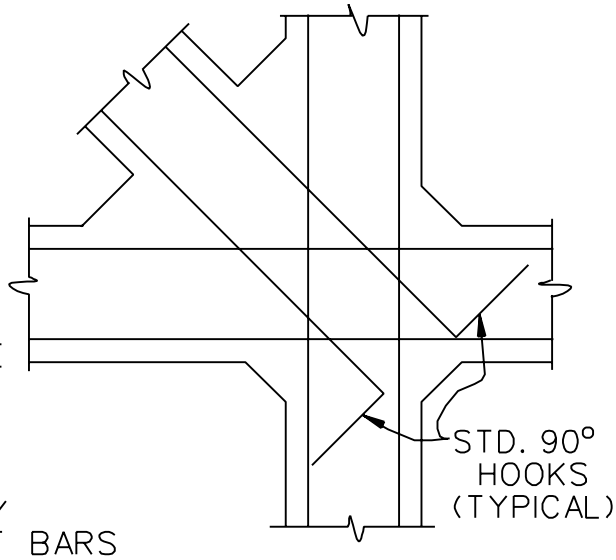

INTERIOR INTERSECTION

RIBBED MAT FOUNDATIONS

- TYPICAL RIB REINFORCEMENT -

NO SCALE

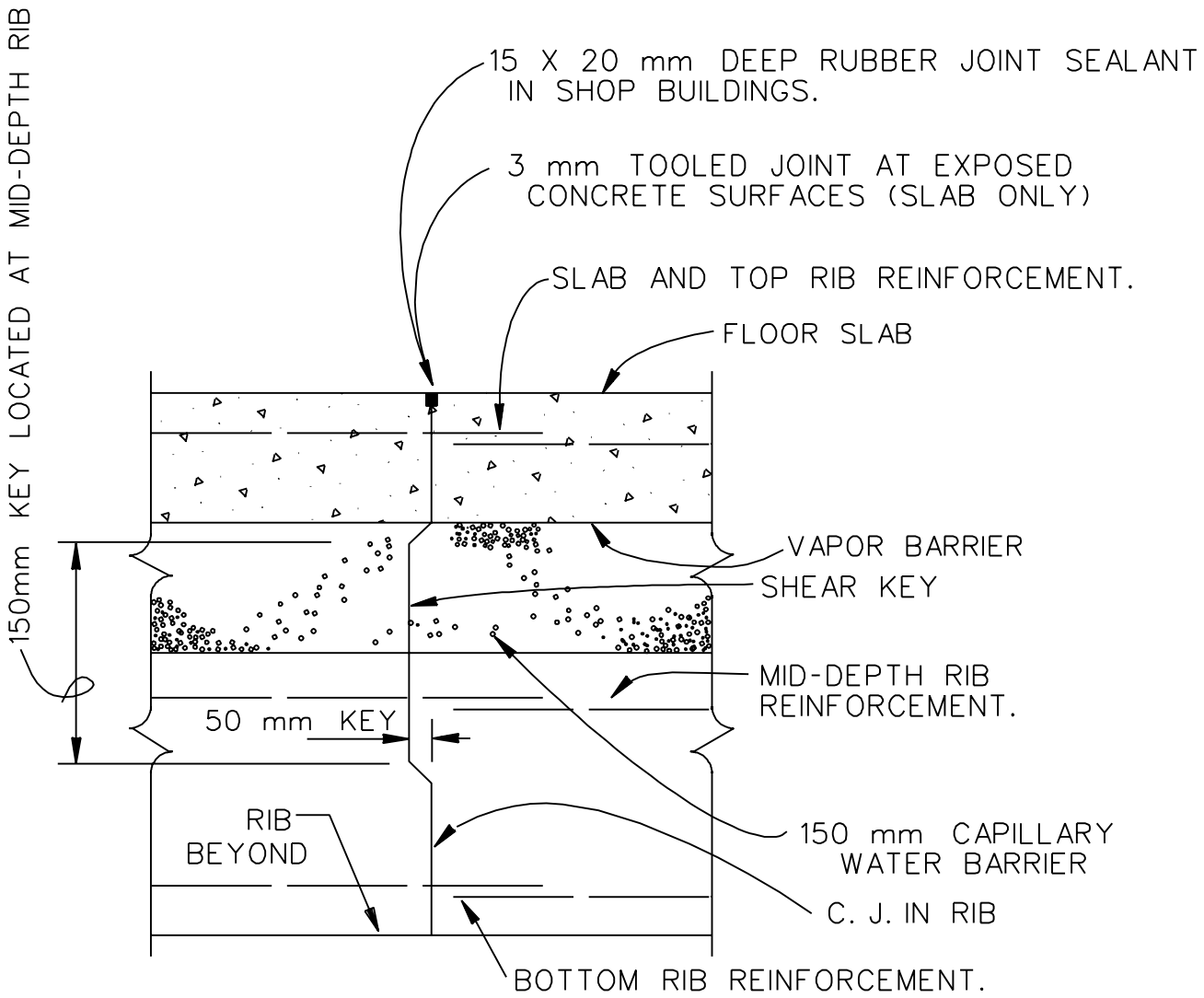

RIBBED MAT CONSTRUCTION JOINT (C.J.)

FLOOR SLAB AND RIB REINFORCEMENT LAPS SHALL BE CLASS B.

DESIGN NOTES:

1. CONSTRUCTION JOINTS ARE TO BE SHOWN ON THE FOUNDATION PLAN IN RIBBED MATS THRU RIBS AND SLAB. SHOW JOINTS ON THE FOUNDATION PLAN.

2. ALL REINFORCING IS CONTINUOUS ACROSS THE CONSTRUCTION JOINT.

3. THE REQUIREMENT FOR THE TOOLED JOINT AND JOINT SEALANT IS TO BE DETERMINED BY THE DESIGNER.

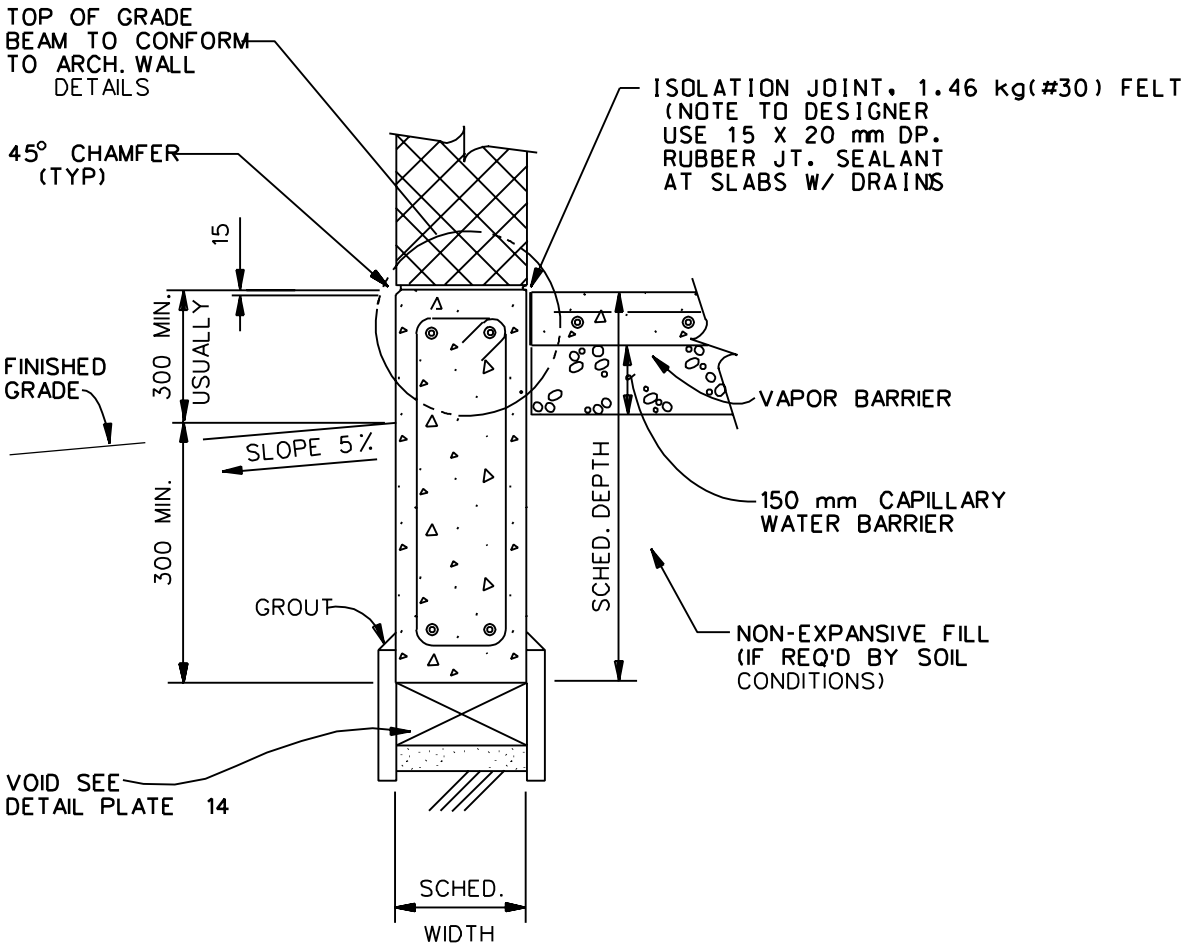

TYPICAL EXTERIOR GRADE BEAM

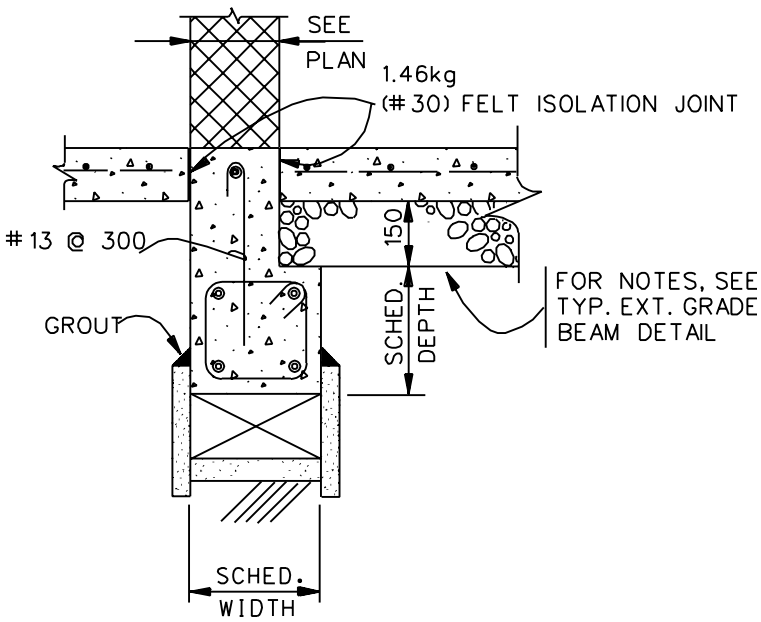

TYPICAL INTERIOR GRADE BEAM

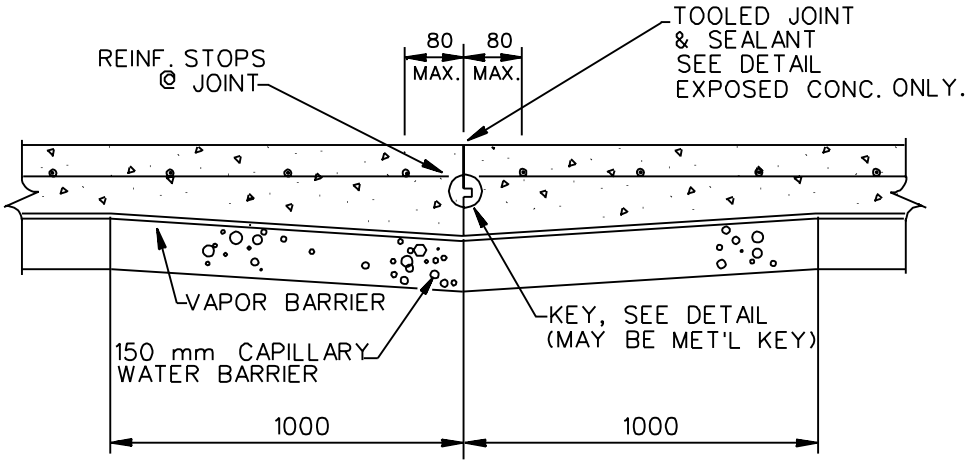

KEYED OPTION

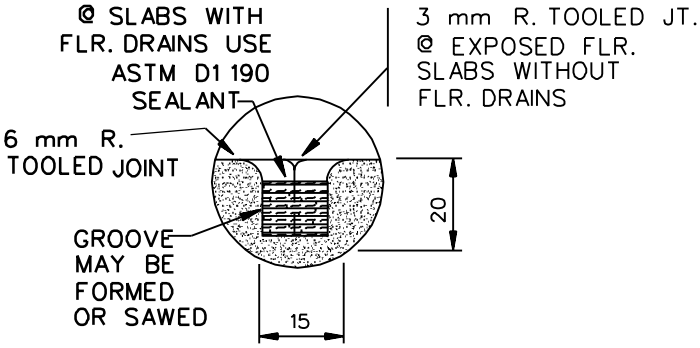

TOOLED JT. & SEALANT

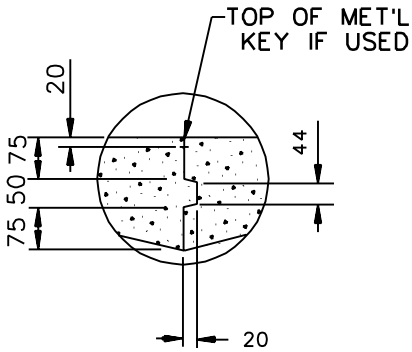

DETAIL OF KEY

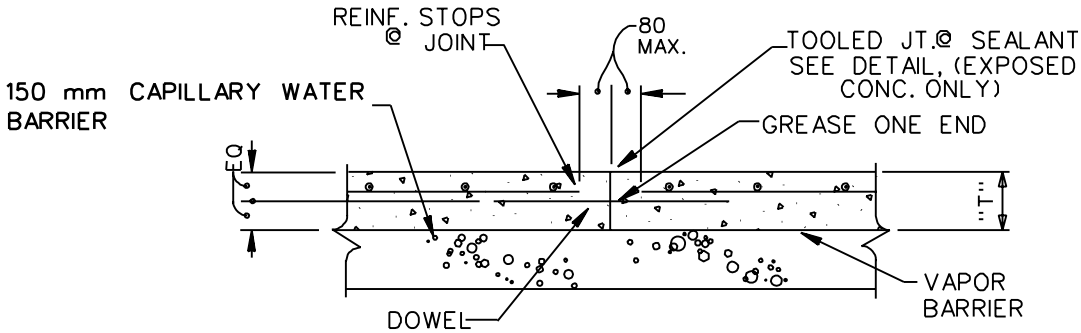

FOR SLABS WITH WHEEL LOADING	FOR OTHER SLABS
20 Ø x 400 LONG@ 300 O.C. FOR T < 200 25 Ø x 450 LONG @ 300 O.C. FOR 200 ≤ T < 280	20 Ø x 400 LONG @ 400 O.C. FOR T = 100 & 125 @ 300 O.C. FOR 125 < T < 200

DOWELED OPTION

(CONTRACTION TYPE)

CONSTRUCTION JOINT DETAILS

(FOR FLOOR SLABS ON GRADE EXCEPT RIB-MATS)

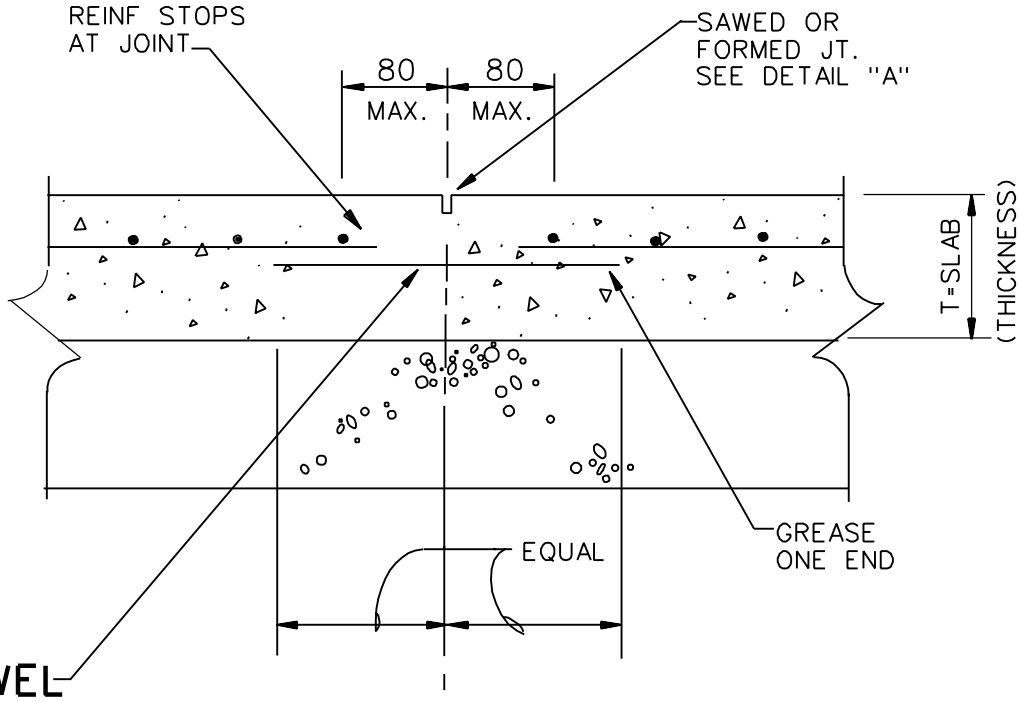

(ONLY FOR SLABS SUBJECTED TO
SIGNIFICANT WHEEL LOADINGS)

20 Ø x 400 LONG @ 300 O.C. (MAX.) FOR T<200 mm
25 Ø x 450 LONG @ 300 O.C. (MAX.) FOR 200≤ T < 290 mm

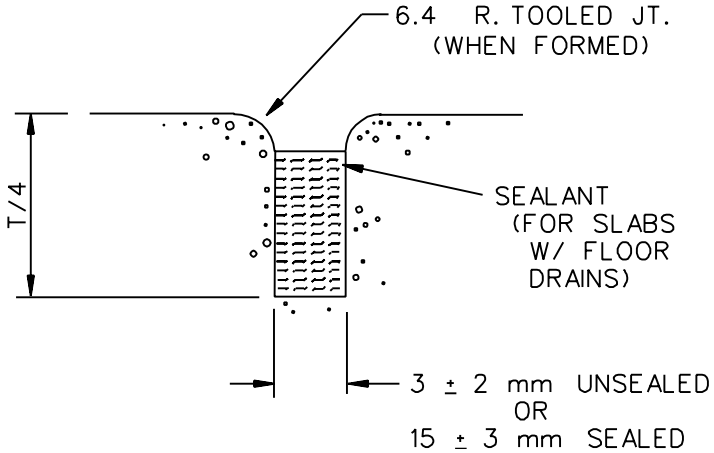

DETAIL "A"

(SAWED OR FORMED)

WEAKENED PLANE JOINT DETAILS

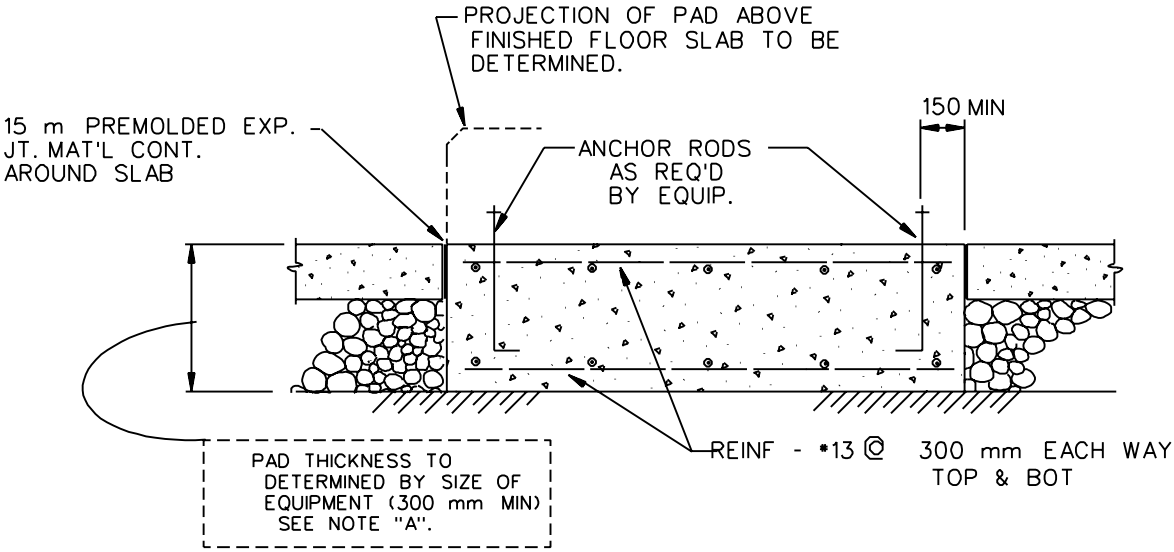

ENGINE GENERATOR SET PAD DETAIL

NO SCALE

NOTE "A"

WEIGHT OF CONC. PAD TO BE 5 TIMES THE MASS OF ROTATING PARTS & A MINIMUM OF 1.5 TIMES THE TOTAL MASS OF SET. FOR HIGH PRESSURE AIR COMPRESSORS OR OTHER EQUIPMENT WHICH WILL PRODUCE A SIGINIFICANT VIBRATION.

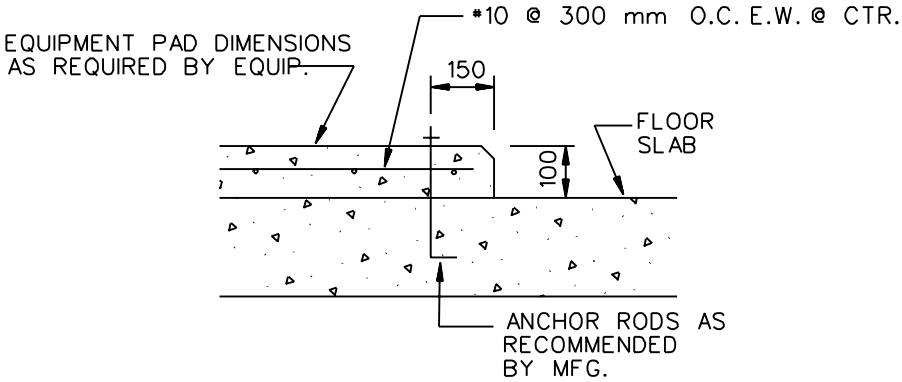

SECTION THRU EQUIPMENT PADS

NO SCALE

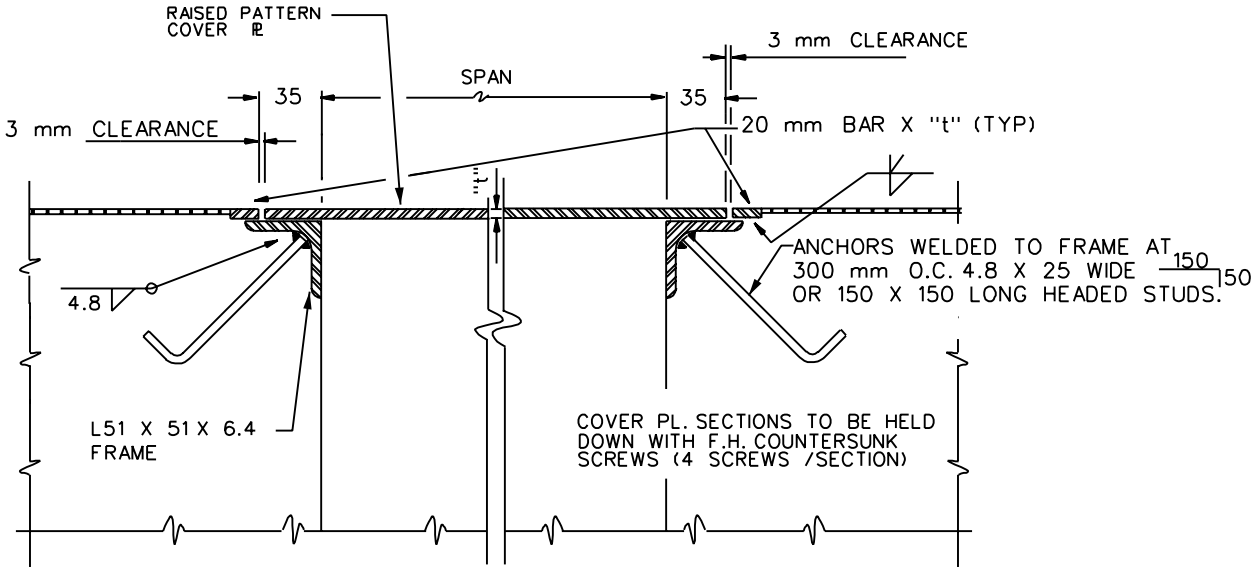

TRENCH COVER PLATE DETAILS

-NTS-

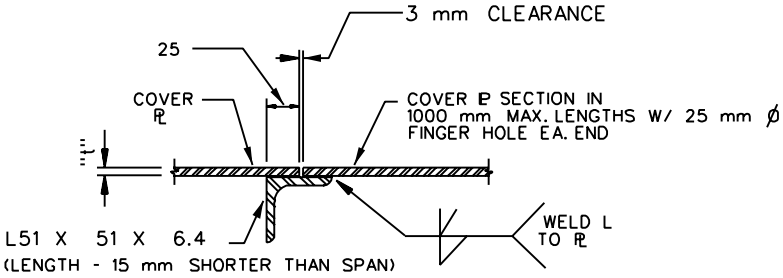

SECTION "A-A"

SPAN mm	"t" mm
300	3.2
450	4.8
600	6.4
750	7.9
900	9.5
1050	11.1

MINIMUM COVER PLATE THICKNESS

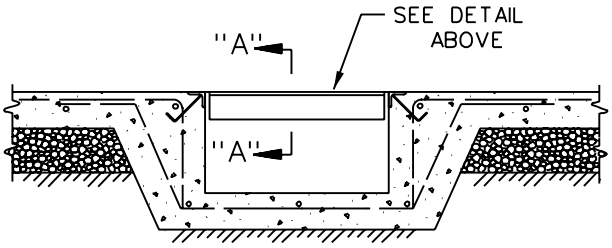

TYPICAL TRENCH SECTION

- NO SCALE -

(APPLIES ALSO TO SIDE WALK DRAINS, FUEL TRENCHES, ETC.)

TYPICAL FLOOR TRENCH DETAILS

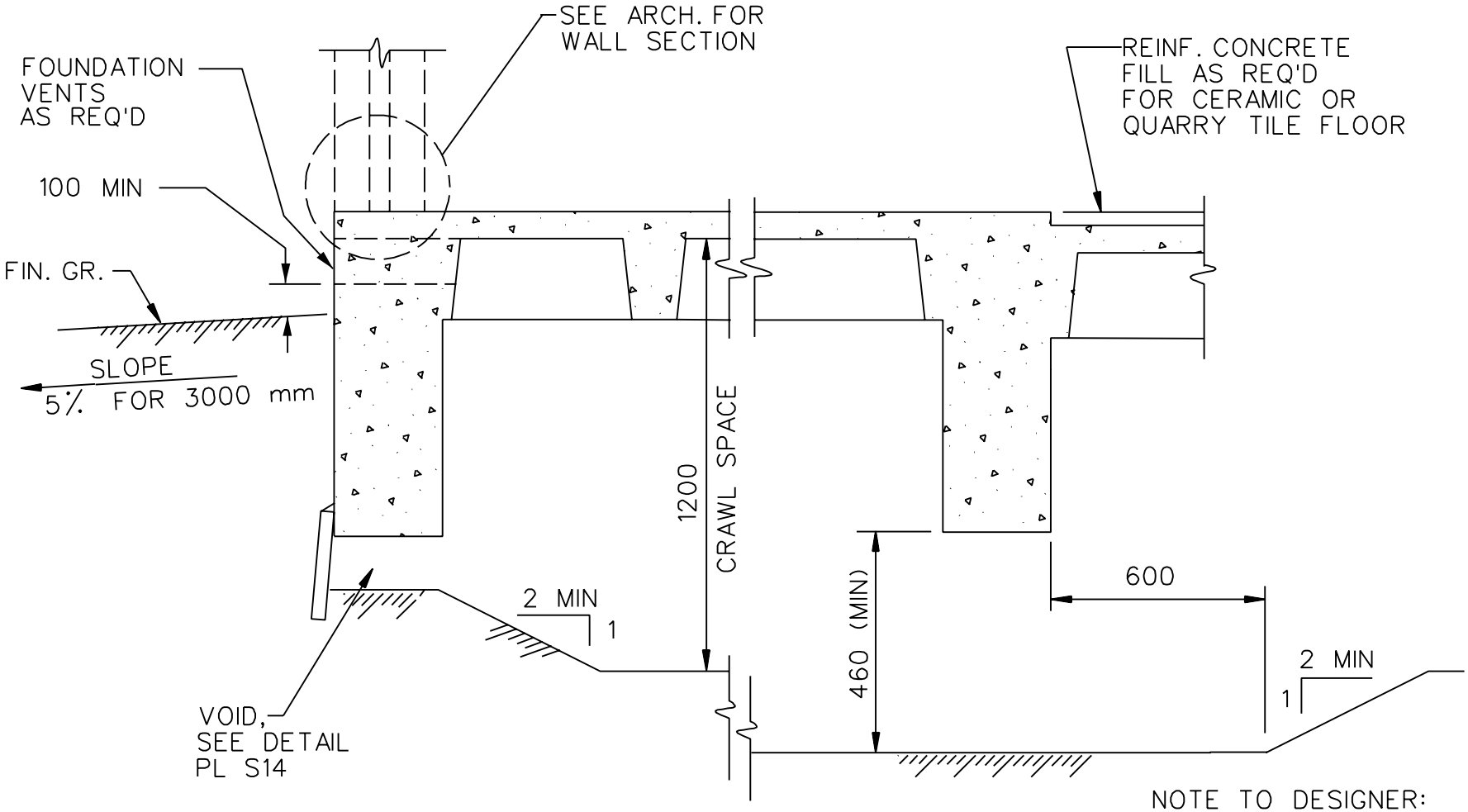

NOTE TO DESIGNER:
PROVIDE JOISTS
UNDER INTERIOR
PARTITIONS PARALLEL
TO JOISTS

SUPPORTED FIRST FLOOR SLAB OVER CRAWL SPACE

PLATE S25

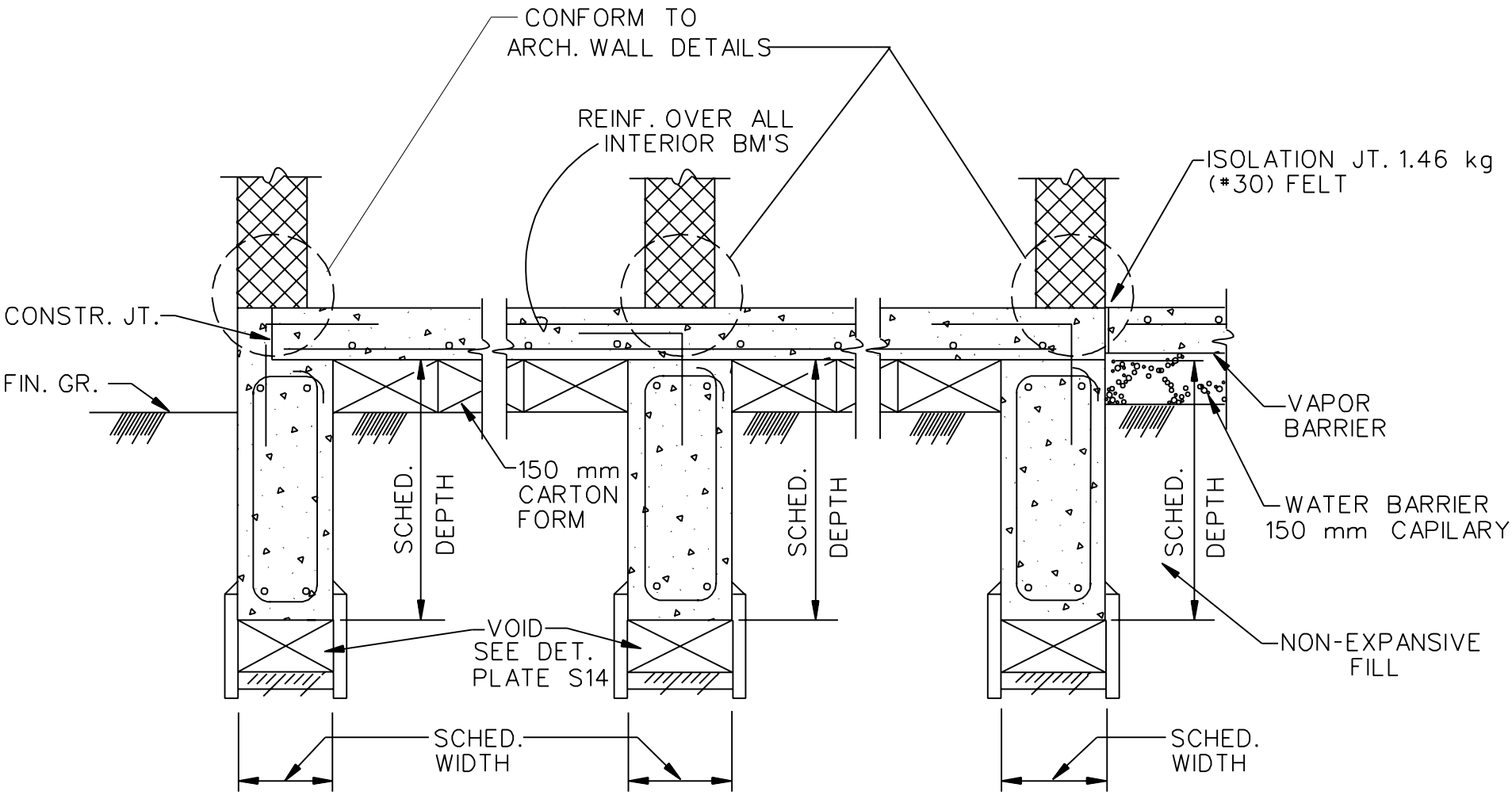

TYPICAL STRUCTURALLY SUPPORTED FIRST FLOOR SLAB

ON CARTON FORMS - EXPANSIVE SOILS

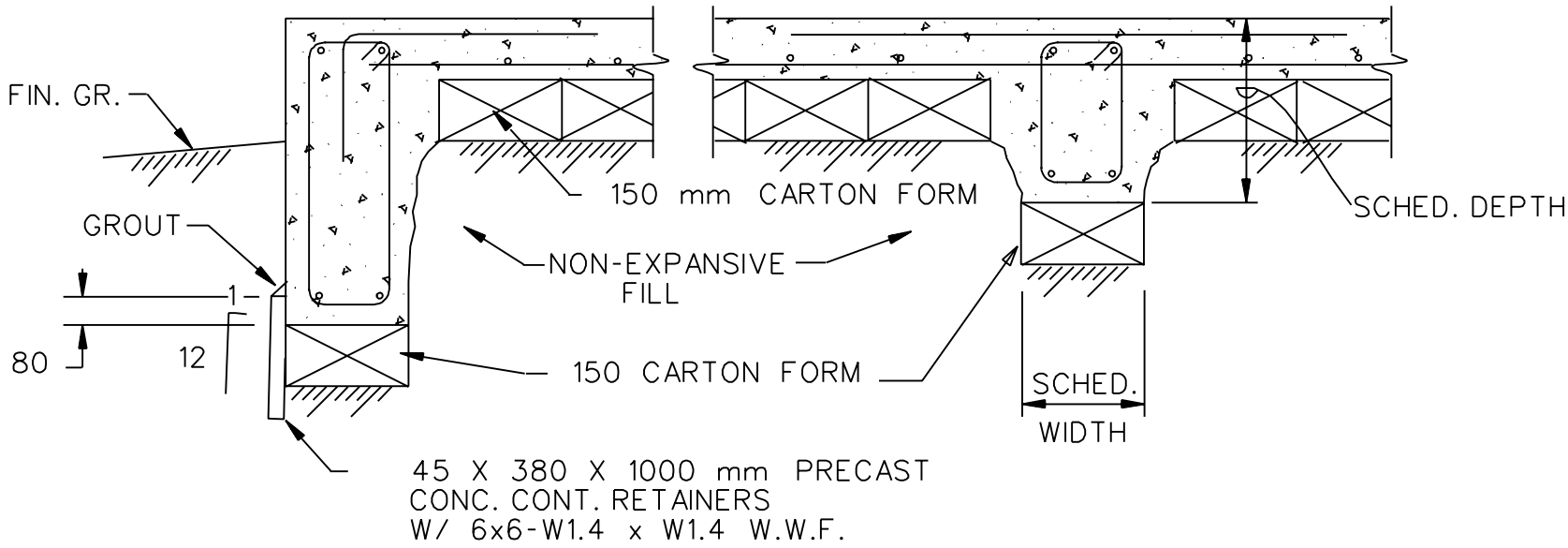

SUPPORTED FLOOR W/ CARTON FORMS

(SLAB MONOLITHIC W/ GRADE BEAMS)

NOTE TO DESIGNER:

THIS TYPE OF CONSTRUCTION MAY BE SUITABLE FOR AREAS OF "MODERATE" EXPANSIVE SOIL TO REDUCE COSTS OF FORMING AND PRECAST RETAINERS IN LIEU OF VOID DETAIL ON PLATE S26.

USE THIS VOID DETAIL ONLY AFTER CONSULTATION AND CONCURRENCE FROM GEOTECHNICAL ENGINEER.

(NON-EXPANSIVE TO MODERATELY EXPANSIVE SOILS)

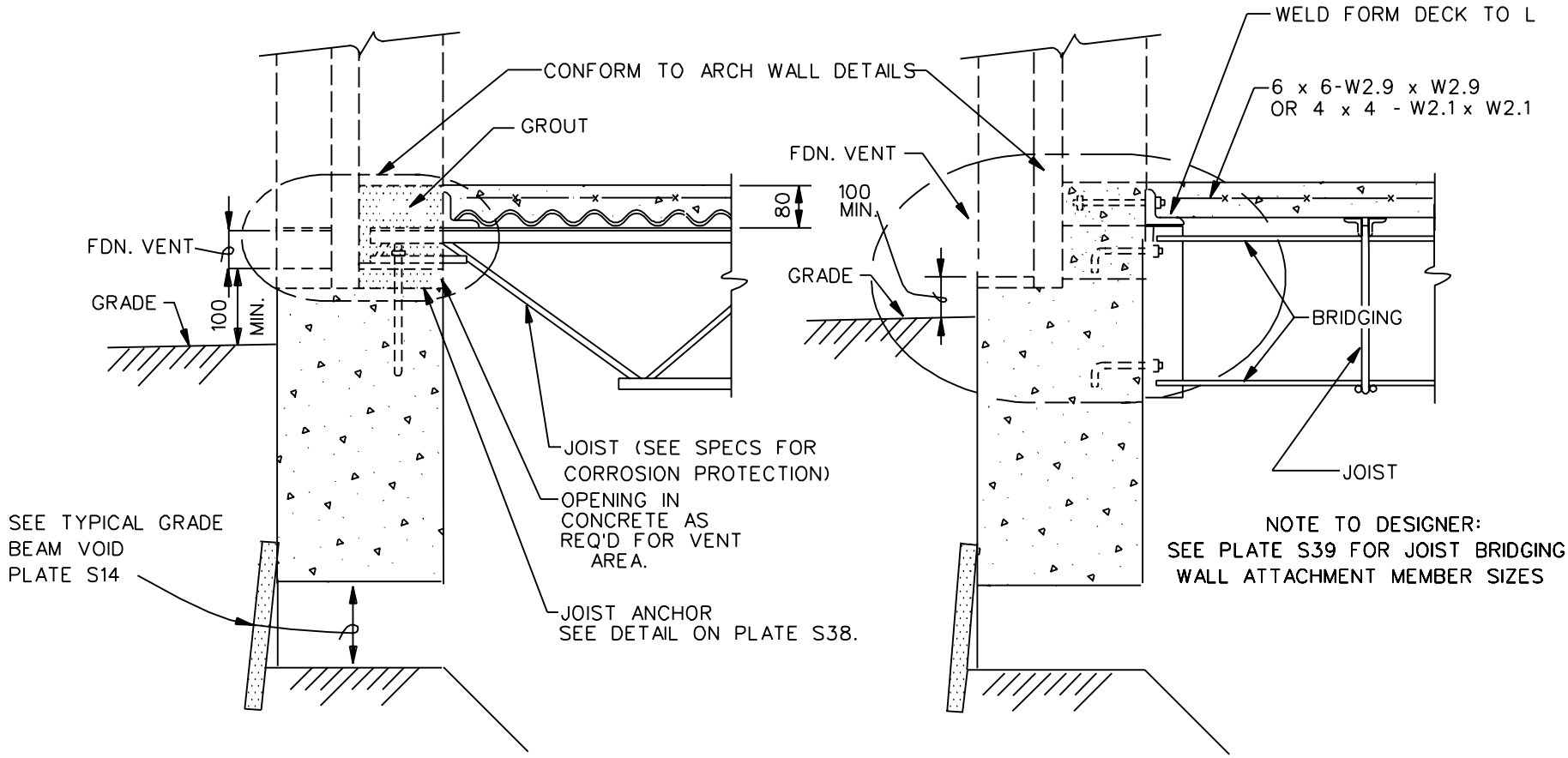

STRUCTURALLY SUPPORTED FLOOR (BAR JOISTS ON GRADE BEAMS)

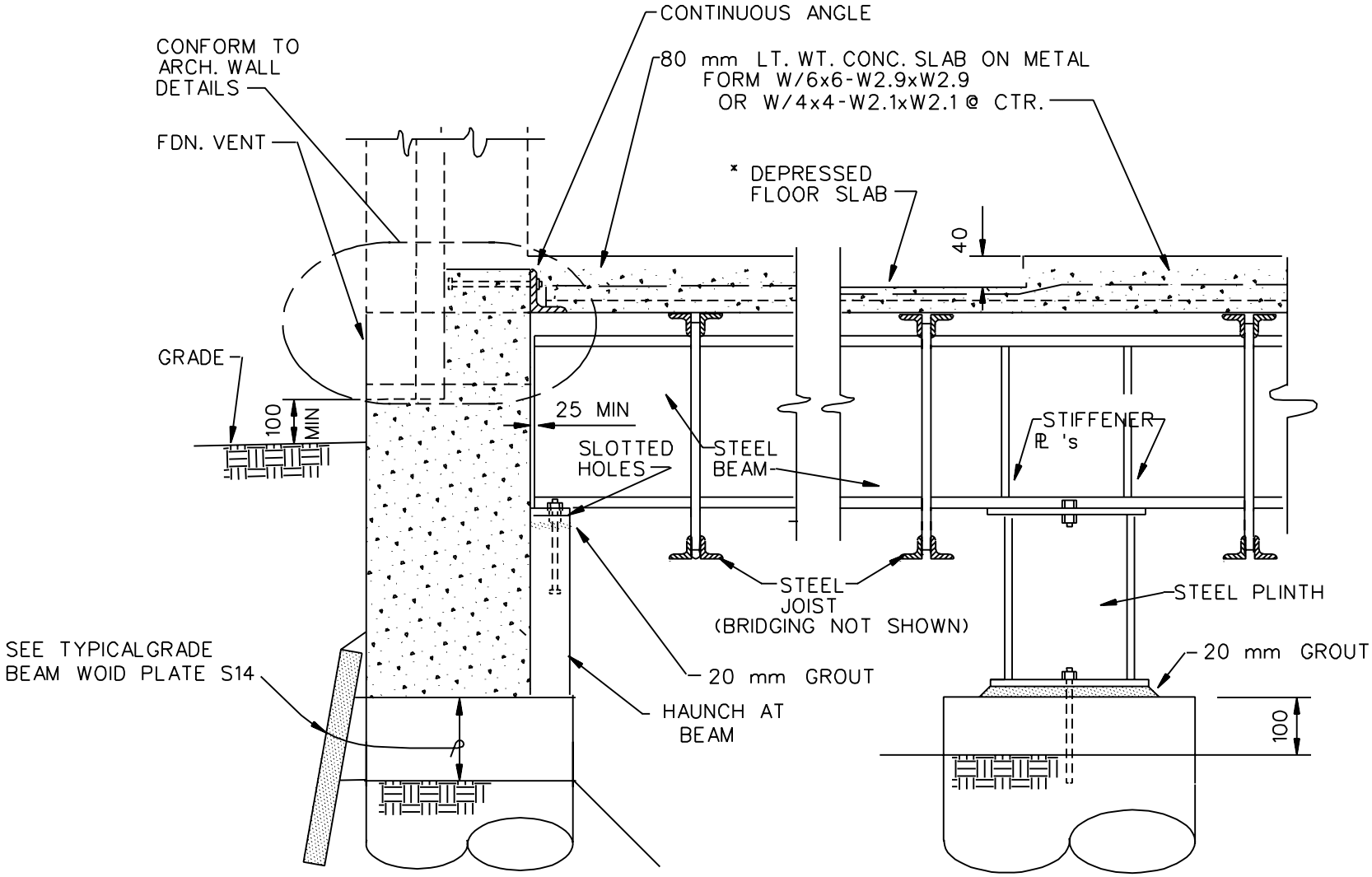

STRUCTURALLY SUPPORTED FLOOR (BAR JOISTS ON STEEL BEAMS)

NOTE TO DESIGNER :

WHEN SMALL AREAS WITH LIGHT FLOOR LOAD WILL REQUIRE A DEPRESSED FLOOR SLAB, SUCH AS TOILETS, FRAMING WILL NOT BE DROPPED, 40 mm SLAB & 40 mm TILE & SETTING BED IS CONSIDERED ADEQUATE.

SPECIFICATIONS SHALL BE EDITED TO ADDRESS CORROSION PROTECTION REQUIREMENTS FOR STEEL BEAMS AND JOISTS IN CRAWL SPACES.

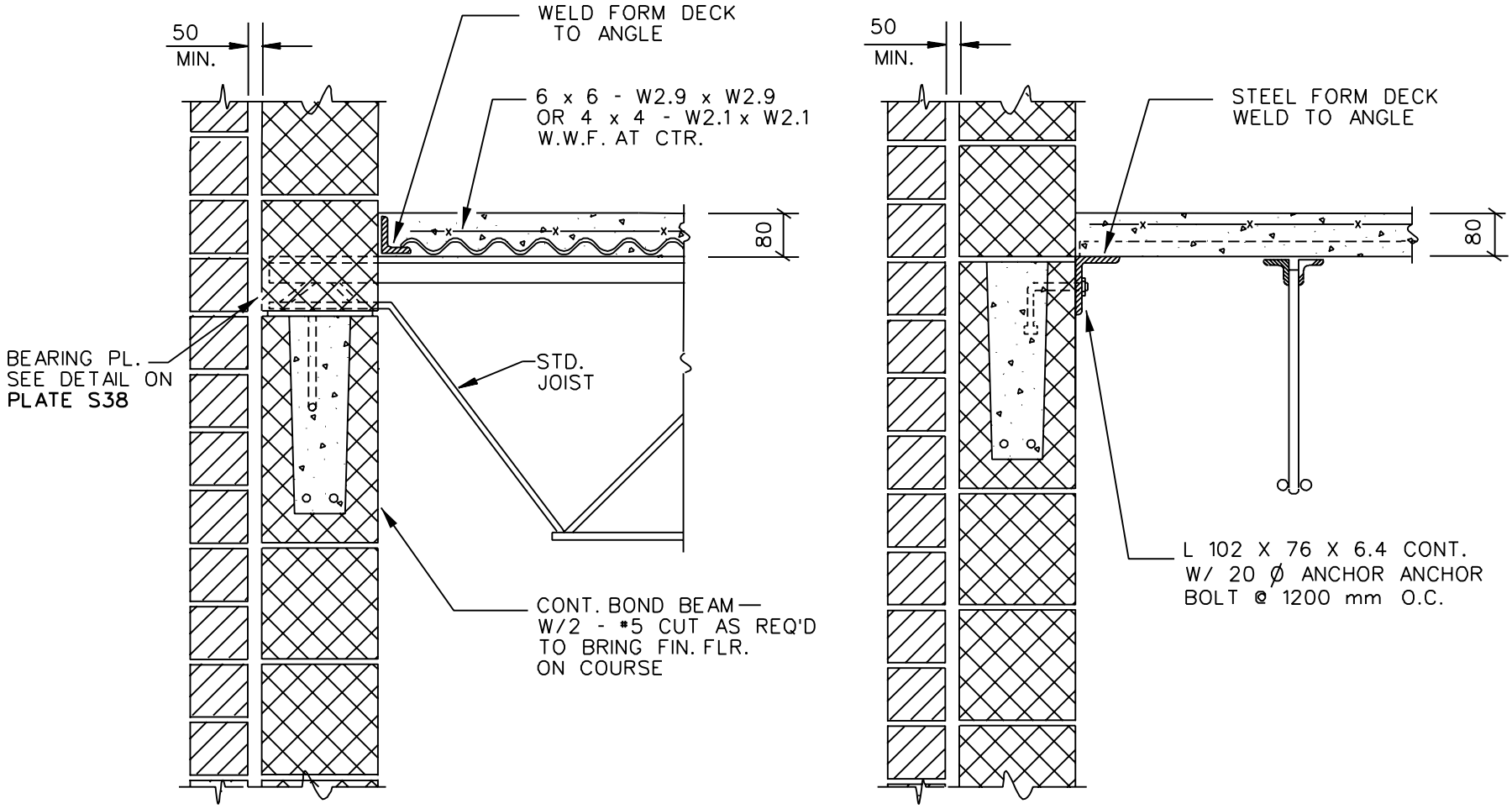

TYPICAL LOADBEARING WALL 2ND FLR. DETAILS

DESIGN NOTE: TYPICAL DETAILS FOR REGIONS OF LOW SEISMICITY (SEISMIC DESIGN CATAGORIES A & B) IN HIGHER SEISMIC ZONES, THESE DETAILS MUST BE REVISED AS NECESSARY TO TRANSFER FLOOR DIAPHRAGM SHEAR INTO THE WALL.

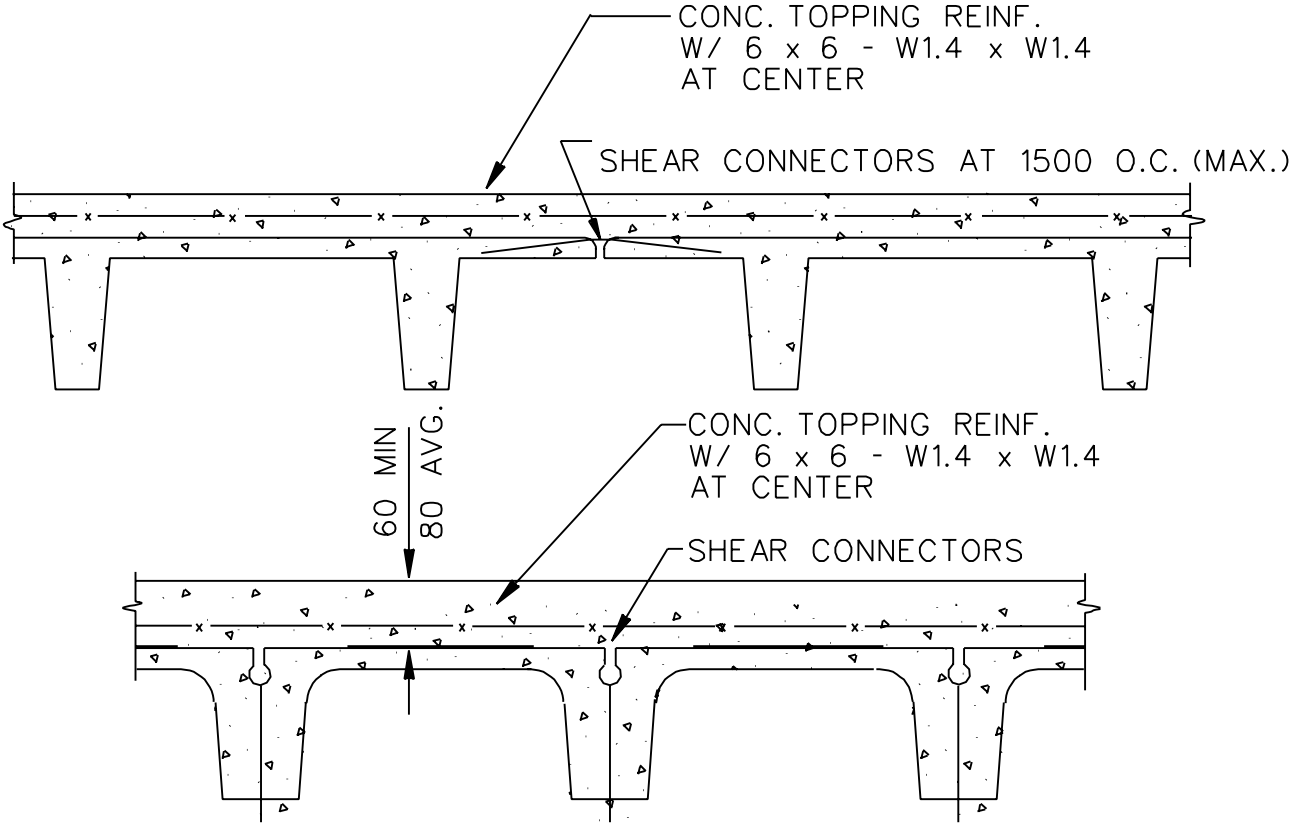

TYPICAL PRECAST FLOOR SYSTEMS

NOTES:

1. PRECAST FLOOR SYSTEM MAY BE DOUBLE TEE, CHANNEL SLAB OR CORED SLAB, PRESTRESSED OR NOT, LIGHTWEIGHT OR HARDROCK CONCRETE DESIGNED AS CONTINUOUS OR SINGLE SPANS WITH (EXCEPT AT DEPRESSED AREAS) OR WITHOUT COMPOSITE ACTION WITH TOPPING.

2. FLOOR SYSTEMS SHALL BE DESIGNED FOR THE LIVE LOADS SHOWN AND FOR THE ACTUAL DEAD LOADS. DESIGN FOR EQUIPMENT LOADS IF GREATER THAN LIVE LOADS.

3. PRECAST BEAMS SHOULD BEAR ON 3 mm NEOPRENE PADS (70 DUROMETER).

4. PRECAST UNITS WILL BE 28 MPa CONCRETE (MIN) AND HAVE NOT MORE THAN 15 mm INPLACE DIFFERENTIAL CAMBER BETWEEN ADJACENT UNITS.

5. TOPPING SHALL BE 21 MPa HARDROCK OR LT. WT. CONC WITH A MINIMUM THICKNESS OF 60 mm AT ANY POINT (EXCEPT AT DEPRESSED AREAS) AND VARY IN THICKNESS AS REQUIRED BY CAMBER IN UNITS SO AS TO PROVIDE A LEVEL FINISHED FLOOR UNDER DEAD LOADS. EMBEDMENT OF CONDUIT OR OTHER PIPING IN TOPPING SHALL NOT BE ALLOWED.

6. TOPPING IS NOT REQUIRED FOR ROOF SLABS.

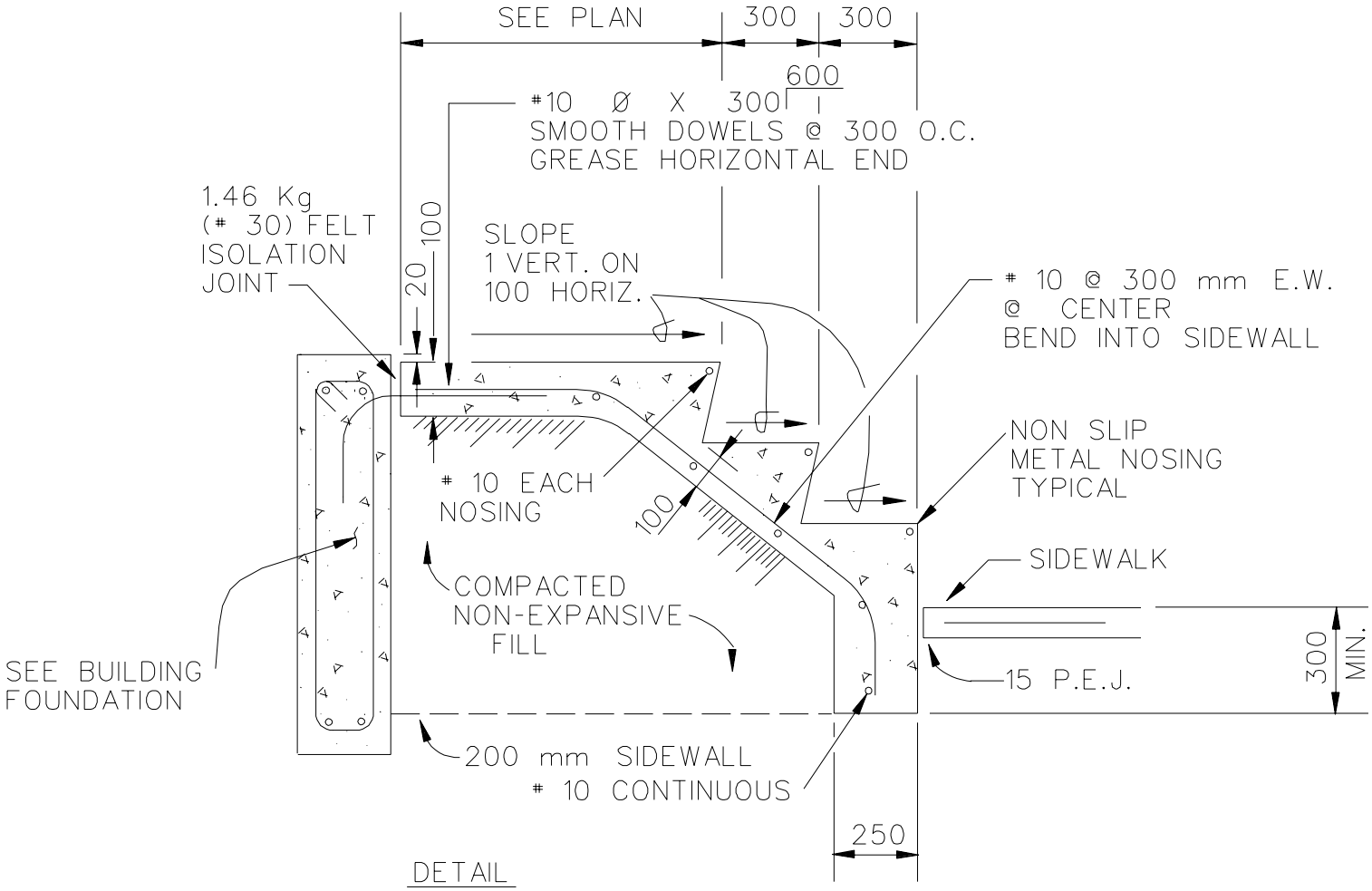

TYPICAL "ARTICULATED" STOOP

PLATE S32

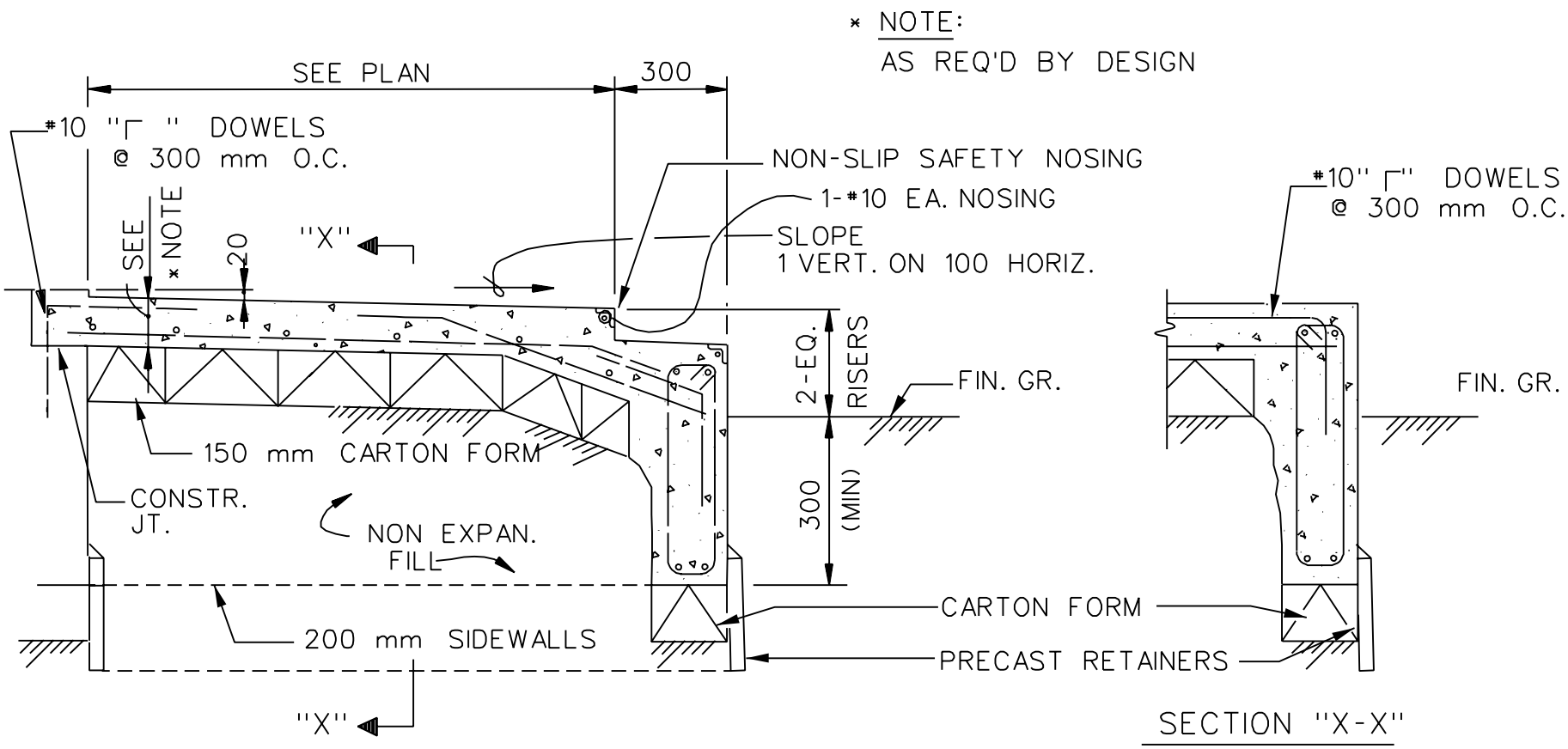

TYPICAL SUPPORTED STOOP

NOTE TO DESIGNER: SEE PLATE S27 FOR VOID DETAIL.

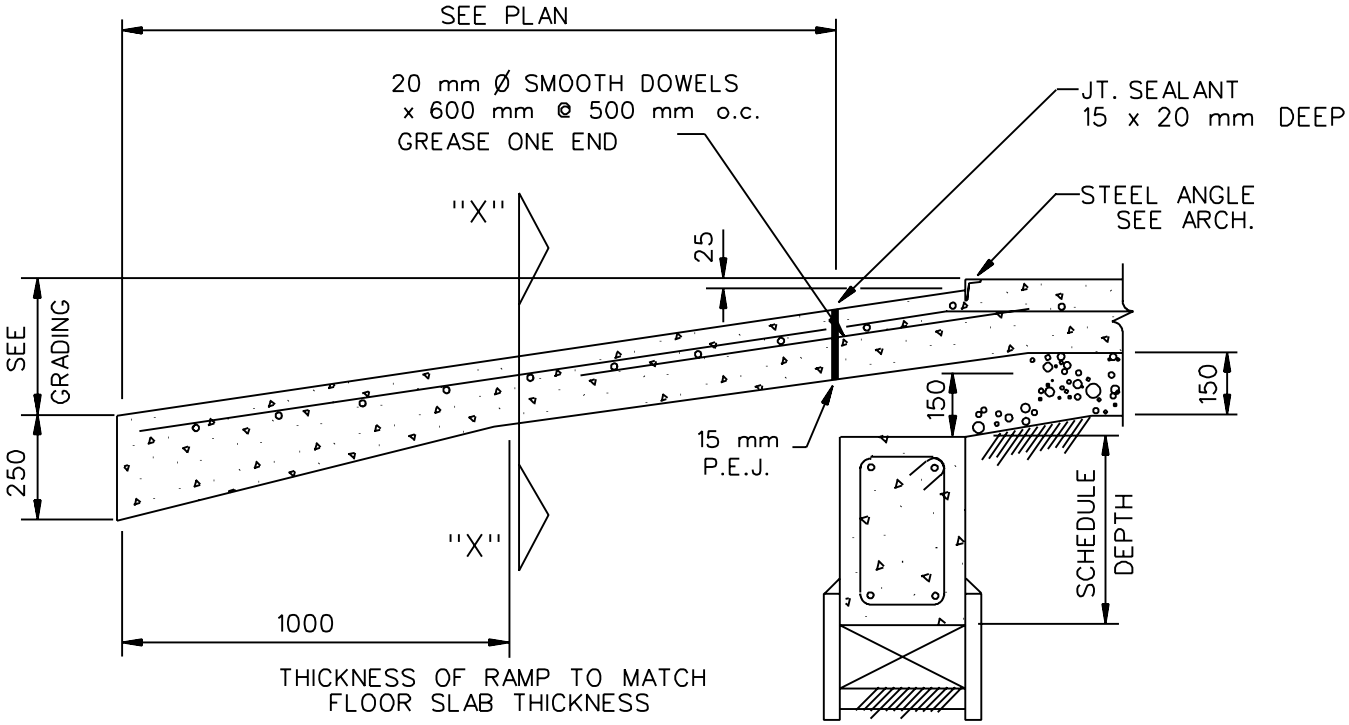

TYPICAL SECTION THRU RAMP TO SLAB ON GRADE FLOOR

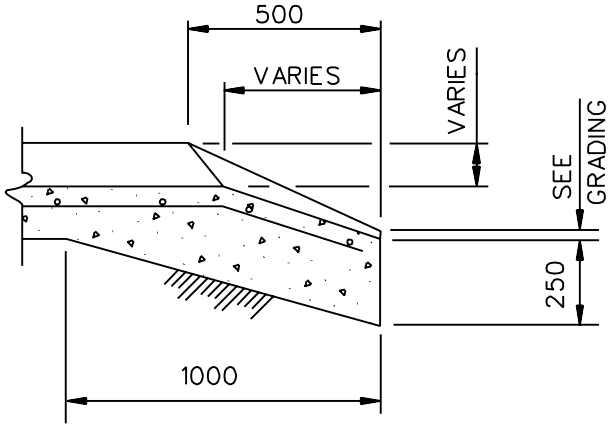

SECTION "X-X"

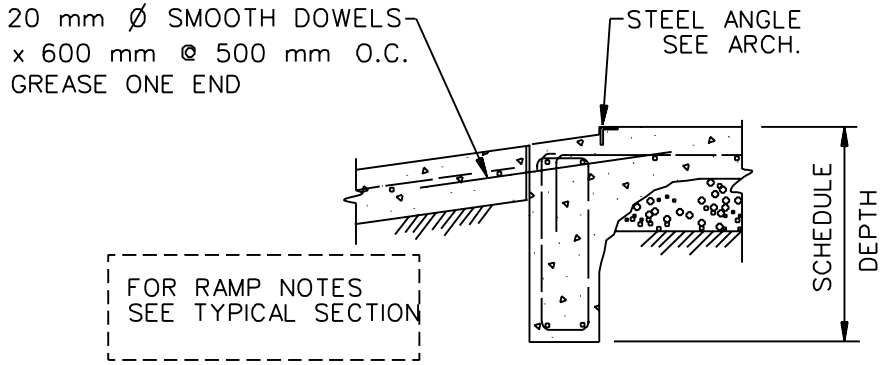

TYPICAL RAMP TO RIBBED-MAT SLAB FLOOR

TYPICAL RAMP DETAILS

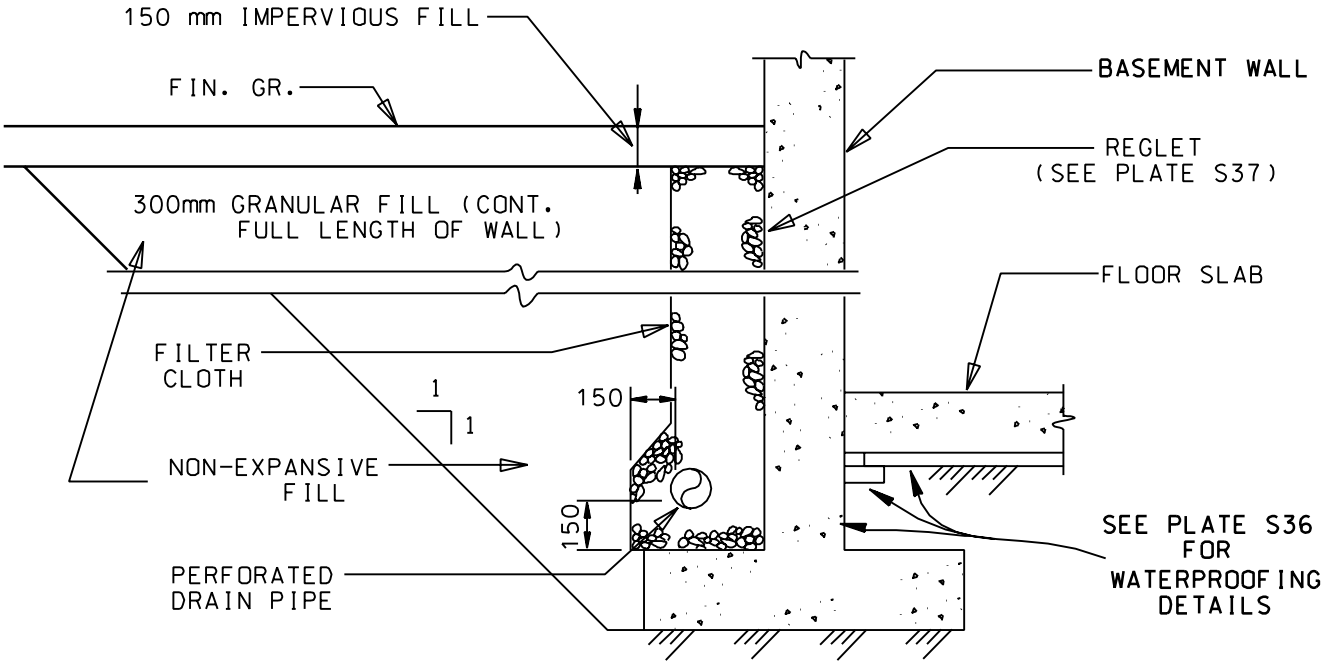

BASEMENT WALL-DRAINAGE SYSTEM

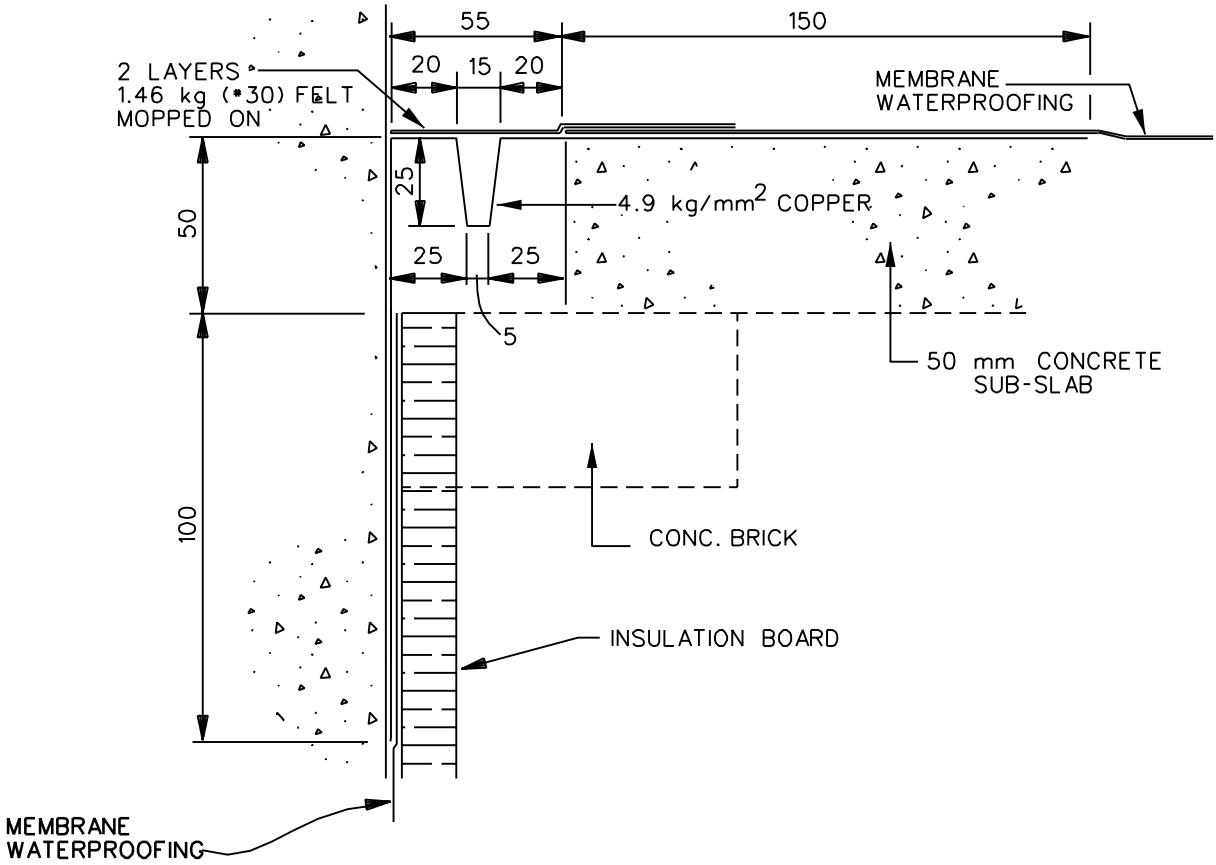

COPPER BELLOWS

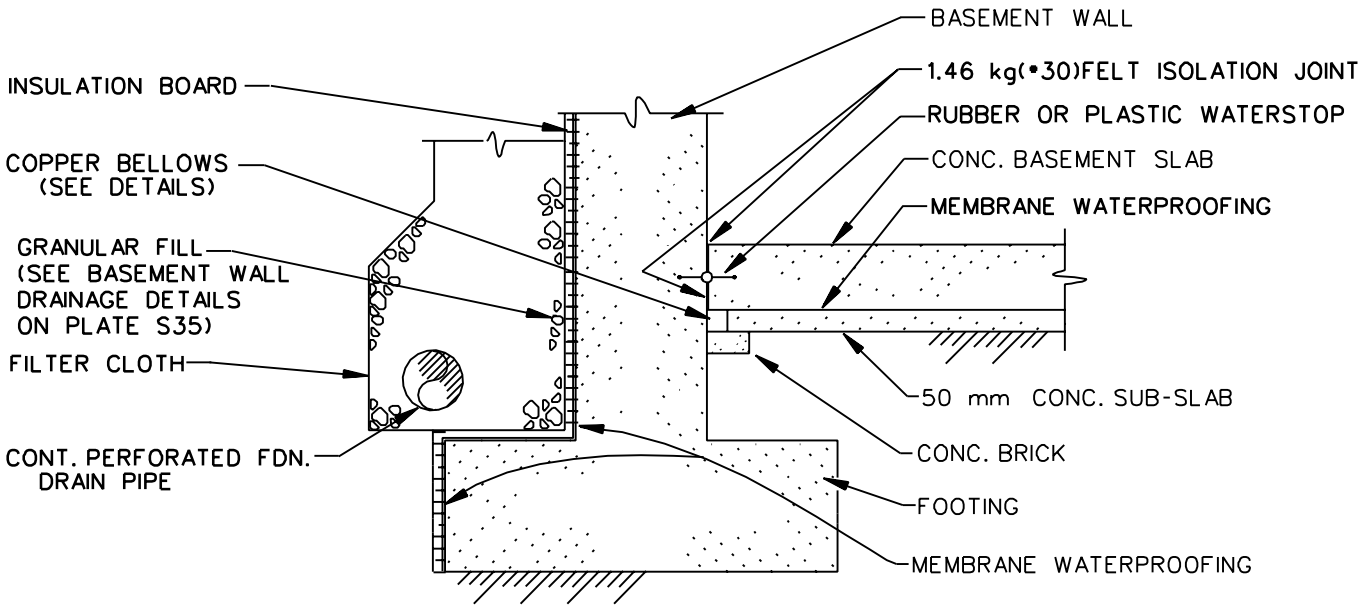

TYPICAL FLOOR TO WALL SECTION

BASEMENT WATERPROOFING DETAILS

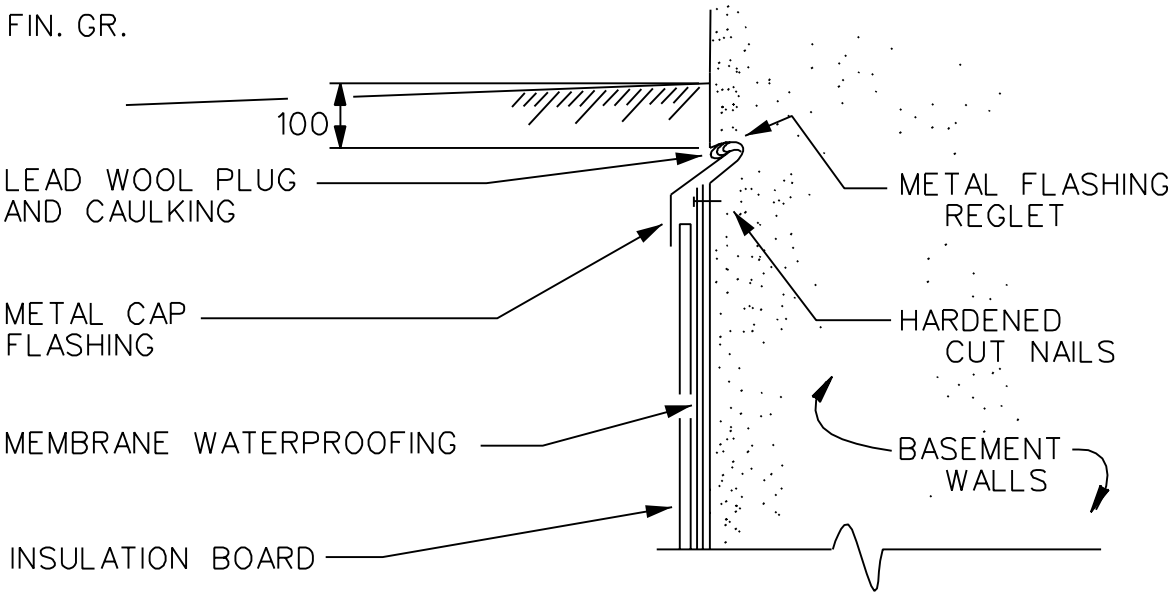

WALL & REGLET DETAIL

(ALSO APPLIES TO EXTERIOR BERMED WALLS)

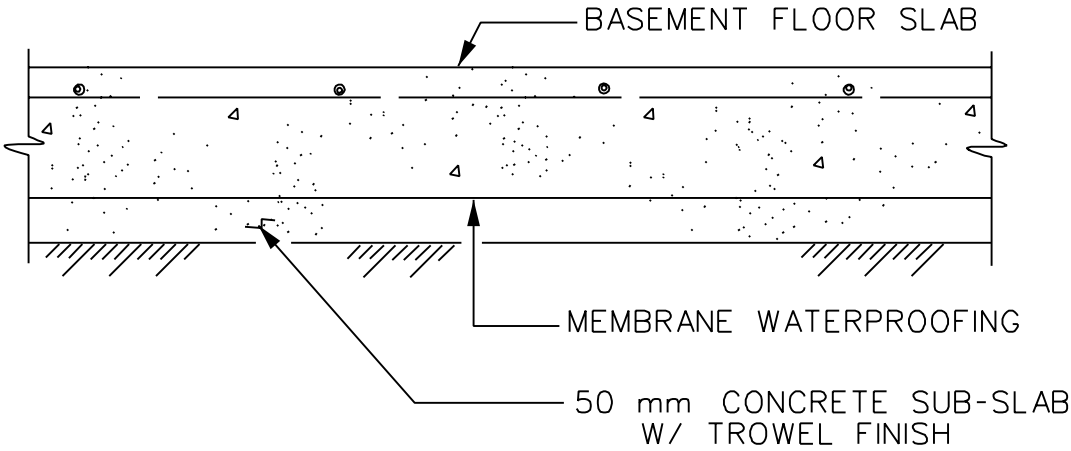

FLOOR SLAB

BASEMENT WATERPROOFING

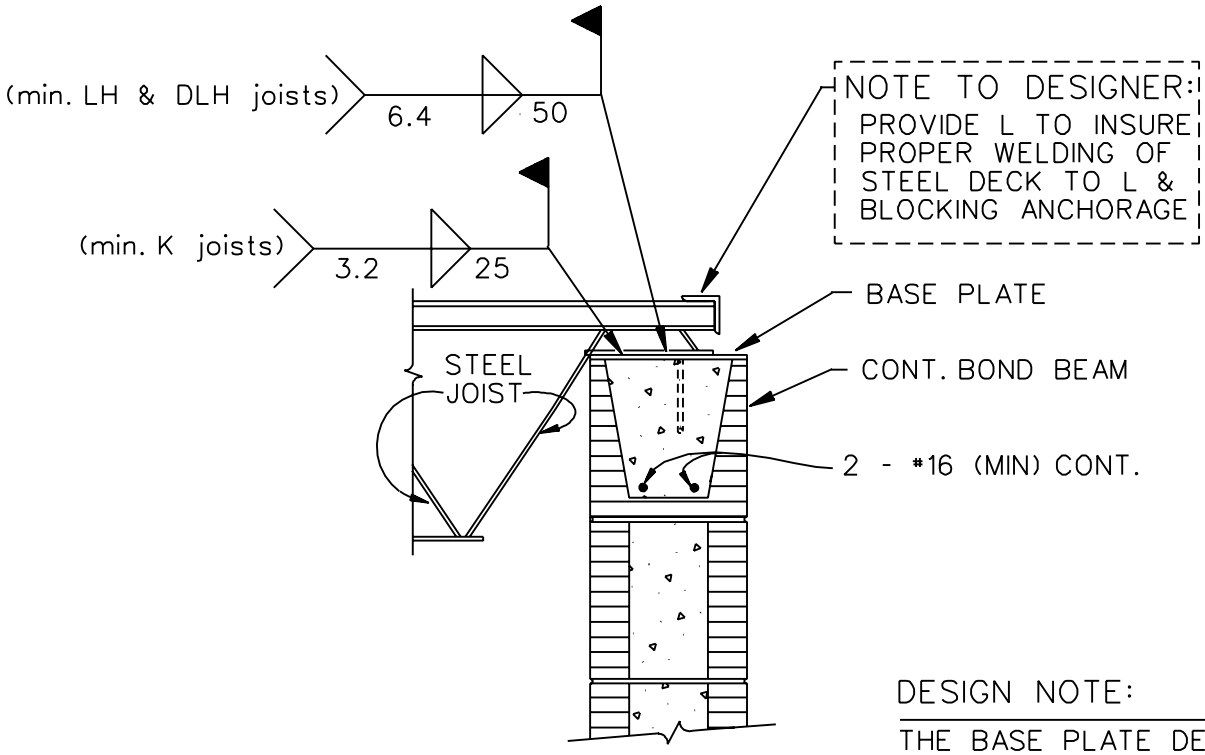

JOIST ANCHORAGE DETAIL

DESIGN NOTE:

THE BASE PLATE DETAIL IS ADEQUATE FOR 4500 N SEISMIC SHEAR OR 9000 N WIND SHEAR (SERVICE LOAD ALLOW) BETWEEN DECK AND WALL. IF LOADS ARE HIGHER ADJUST THE STUD SIZE OR PROVIDE ADDITIONAL CONNECTIONS.

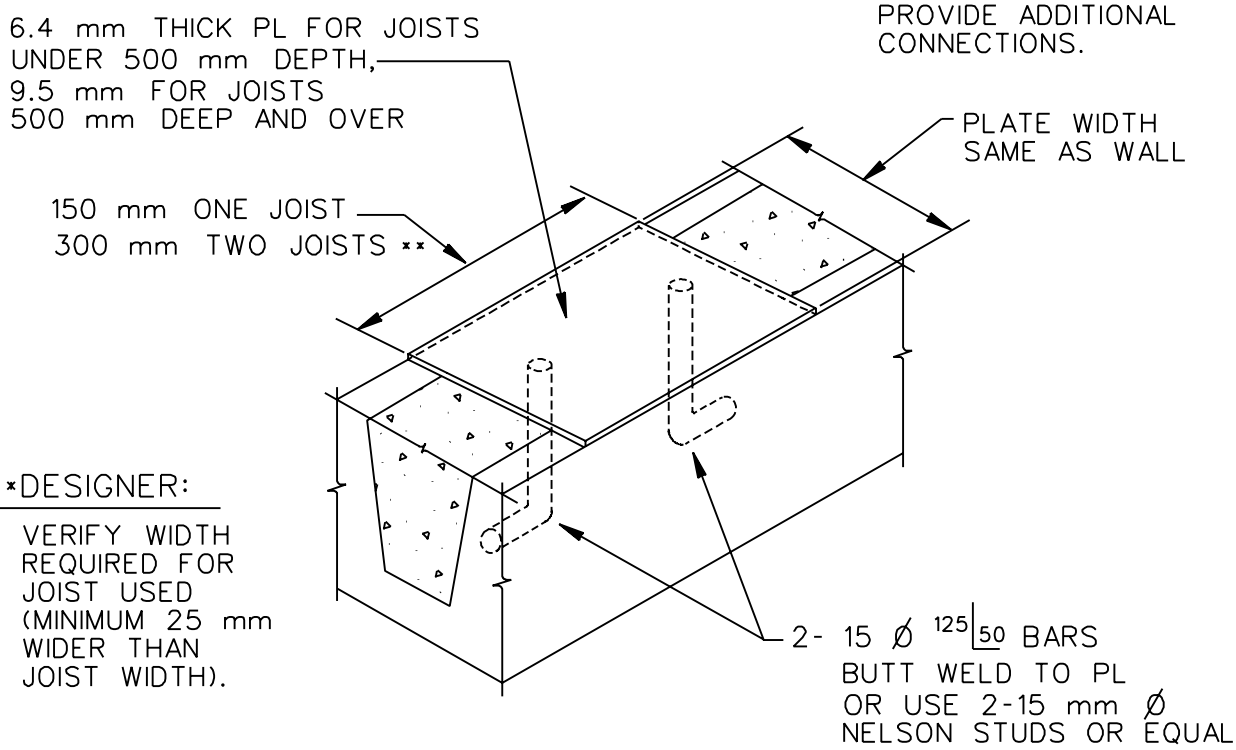

**DESIGNER:

VERIFY WIDTH REQUIRED FOR JOIST USED (MINIMUM 25 mm WIDER THAN JOIST WIDTH).

TYPICAL STEEL JOIST BASE LP DETAIL

N.T.S.

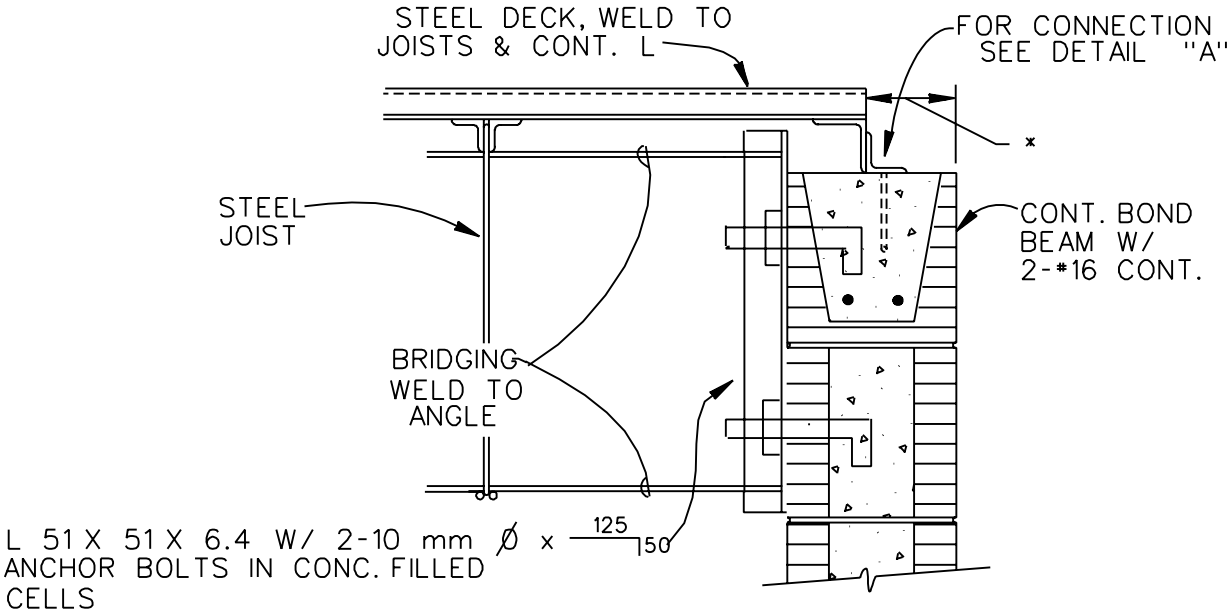

SECTION

DESIGN NOTE:
SHEAR CAPACITY 4500 N SEISMIC SHEAR OR 9000 N WIND SHEAR PER CLIP CONNECTION.
(SERVICE LOAD ALLOWABLE)

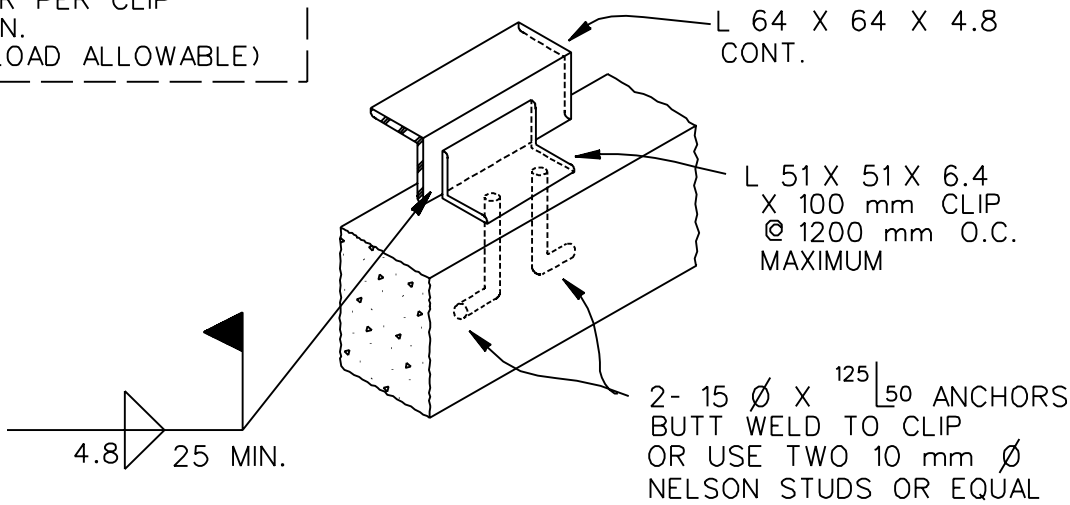

DETAIL "A"

ROOF CONNECTION AT RAKE DETAILS

* NOTE TO DESIGNER: CALL OUT DIMENSION AND COORDINATE WITH ARCHITECTURAL.

DESIGN NOTE:

THIS DETAIL IS ADEQUATE FOR 3750 N/m SEISMIC SHEAR OR 7500 N/m WIND SHEAR BETWEEN DECK AND WALL.
IF SHEARS ARE HIGHER ADJUST BOLT SIZE OR CLIP SPACING.
(SERVICE LOAD ALLOWABLE)

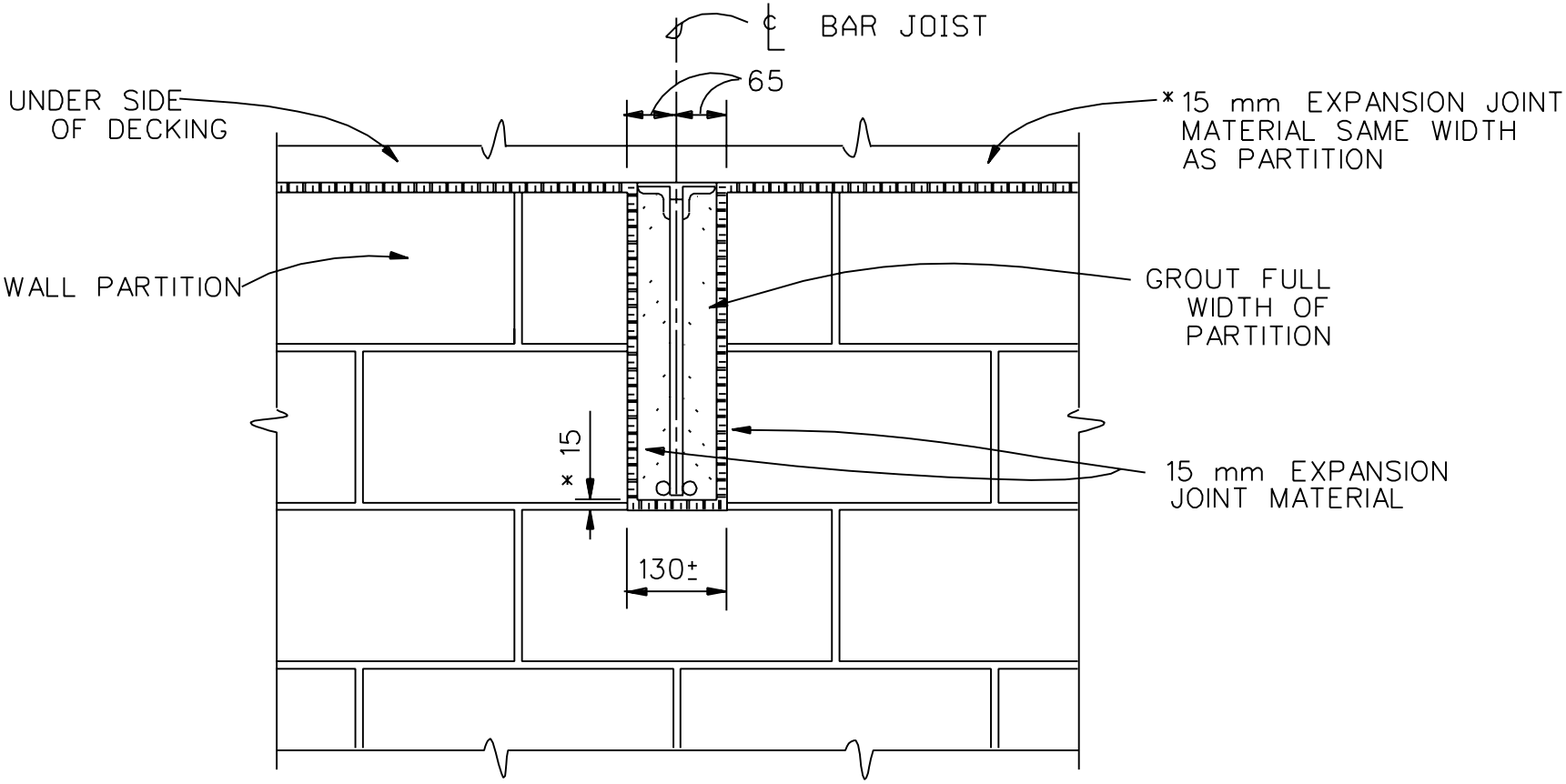

STEEL JOIST & CMU PARTITION INTERSECTION

* 15 mm MINIMUM BUT MUST BE INCREASED, IF NECESSARY, TO EXCEED LIVE LOAD DEFLECTIONS.

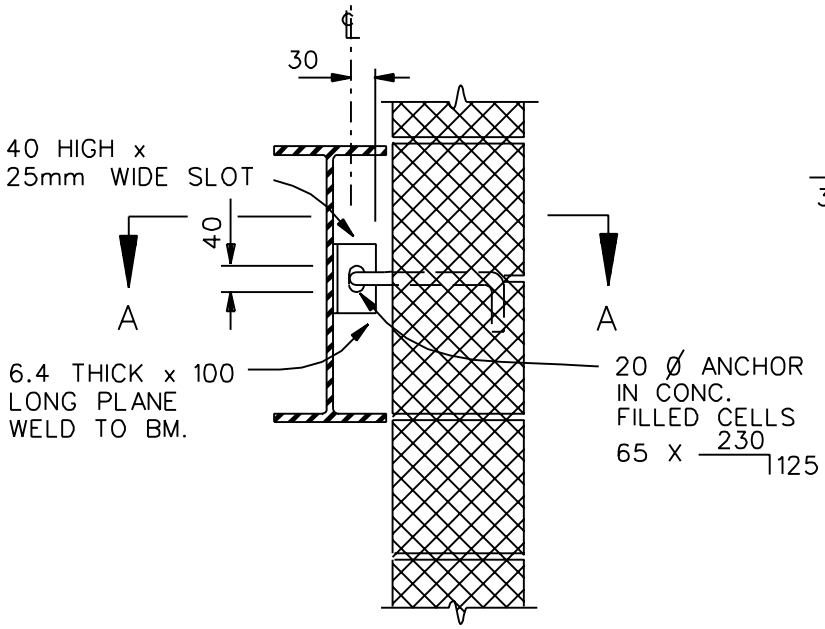

DETAIL 1

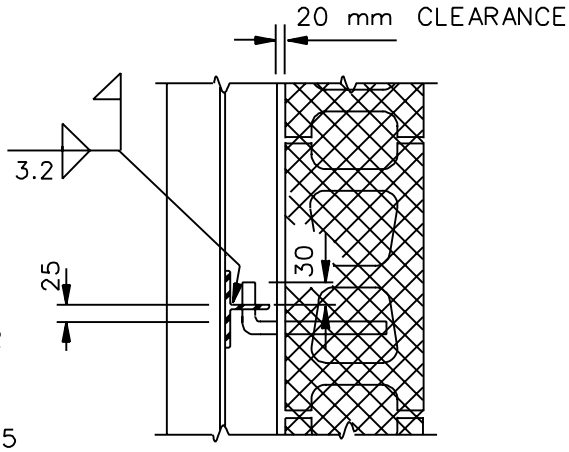

SECTION A-A

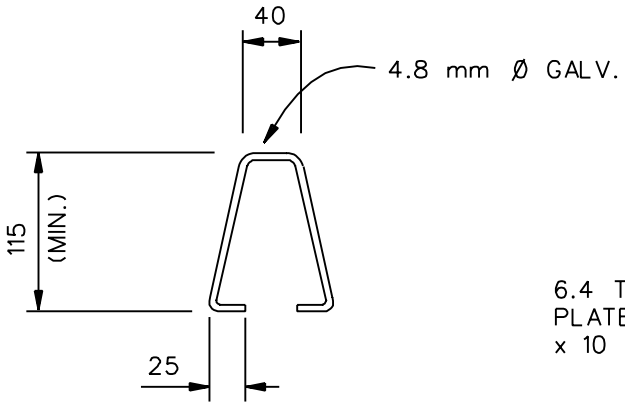

FLEXIBLE ANCHOR

LOAD CAPACITY OF EACH ANCHOR = 2670 N

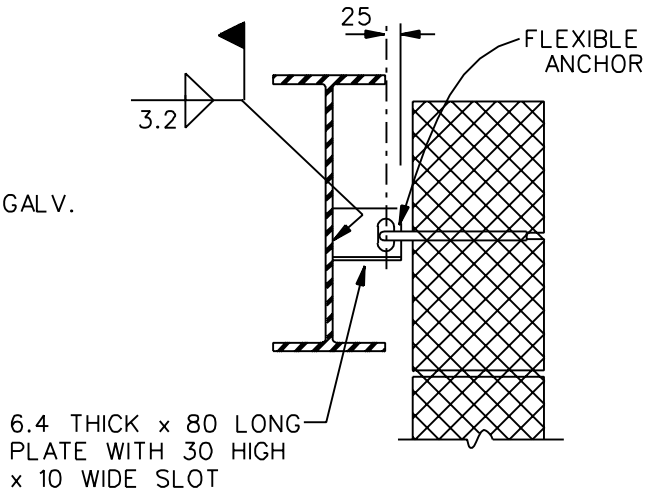

DETAIL 2

SELECT ANCHOR SPACING TO CARRY NORMAL LOADS ON WALL

WALL ANCHOR TO STEEL BEAM DETAILS

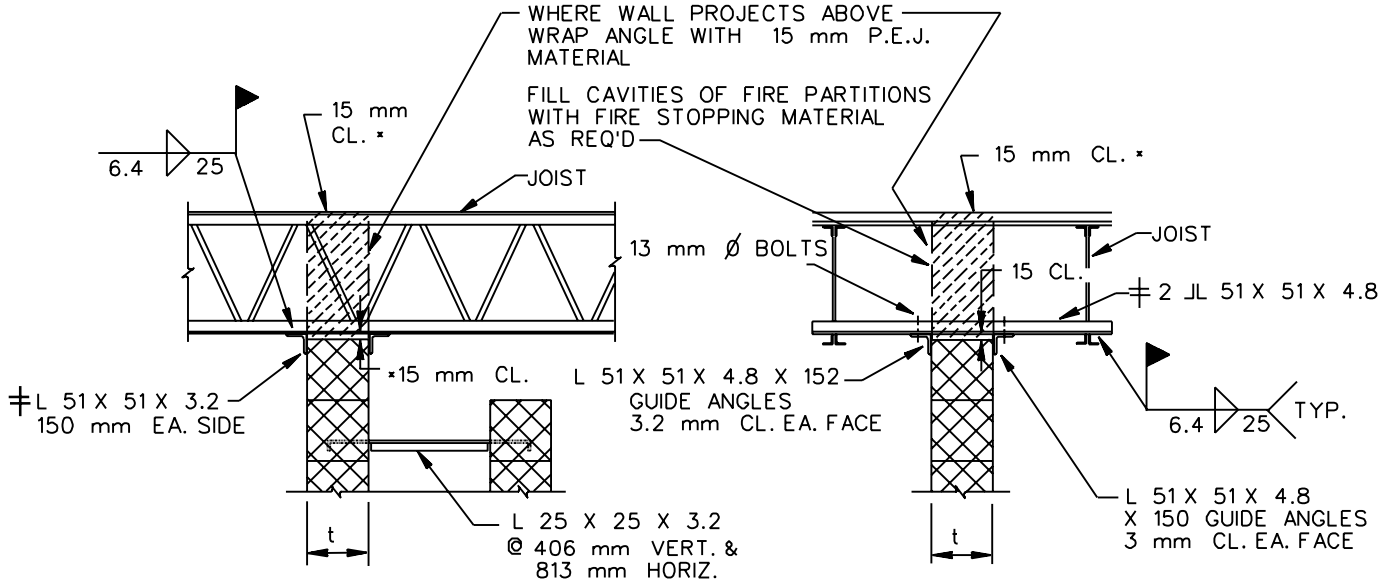

CHASE PARTITION

(FOR ALL SEISMIC AREAS)

WITH STRUCTURAL STEEL JOIST

(FOR ALL SEISMIC AREAS)

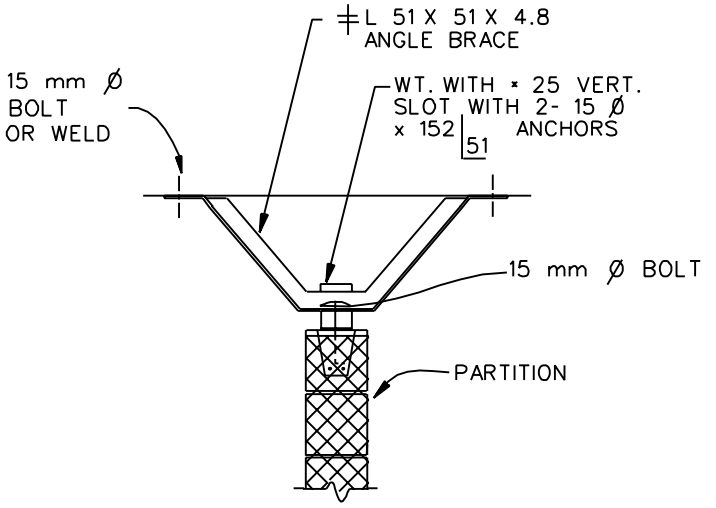

ALTERNATE SUPPORT

(FOR ALL SEISMIC AREAS)

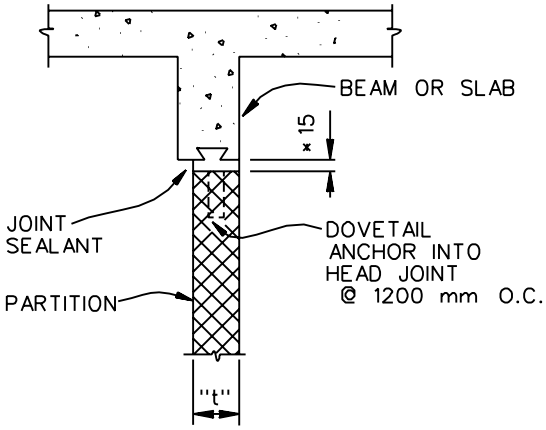

WITH CONCRETE BEAM OR SLAB

(FOR USE ONLY WHEN PARTITION DESIGN PRODUCES NO SEISMIC REQUIREMENTS)

TYPICAL DETAILS of INTERIOR CMU PARTITIONS

NOTE TO DESIGNER:

SUPPORT AT TOP OF WALL WHEN DISTANCE BETWEEN LATERAL SUPPORTS EXCEED 36 " t "

* 15 mm DEFLECTION CLEARANCE IS MINIMUM BUT SHOULD NOT BE LESS THAN LIVE LOAD DEFLECTION OF ROOF SYSTEM.

‡ SPACING TO BE DETERMINED BY DESIGNER

DESIGN NOTE:
CHECK REINFORCEMENT AT CORNERS OF BUILDING FOR WIND & SEISMIC LOADS.

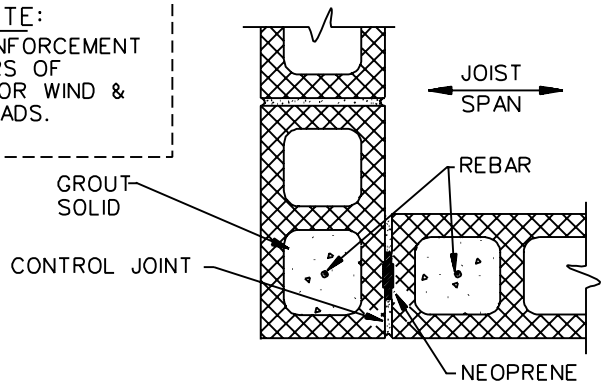

DESIGN NOTE:
TYPE "A" C.J. IS REQUIRED IN ALL LOAD BEARING CONSTR.

TYPE "A"

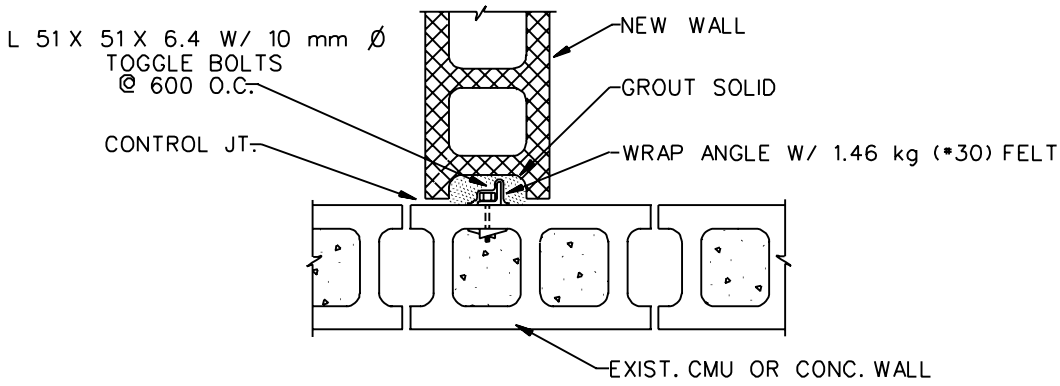

TYPE "B"

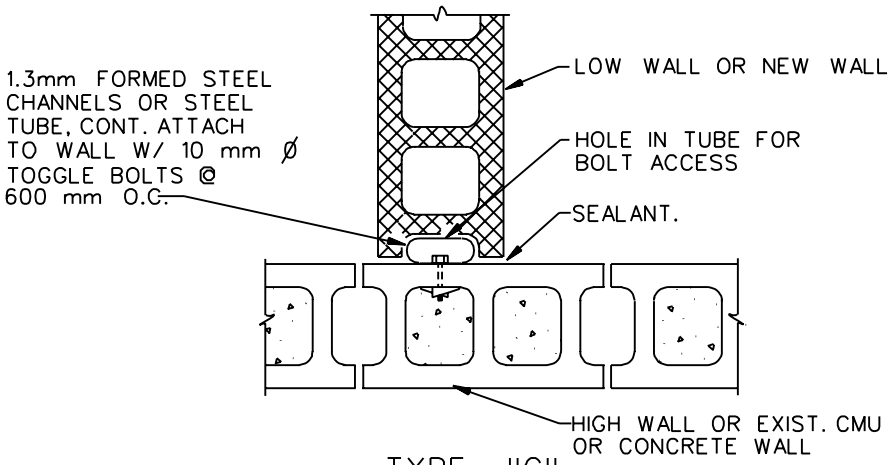

TYPE "C"

SPECIAL CONTROL JOINT DETAILS

NOTE TO DESIGNER:

COORDINATE CMU DETAILS TO MEET ARCHITECTURAL AND STRUCTURAL REQUIREMENTS. CMU CONTROL JOINT LOCATIONS SHALL BE SHOWN ON THE CONTRACT DRAWINGS.

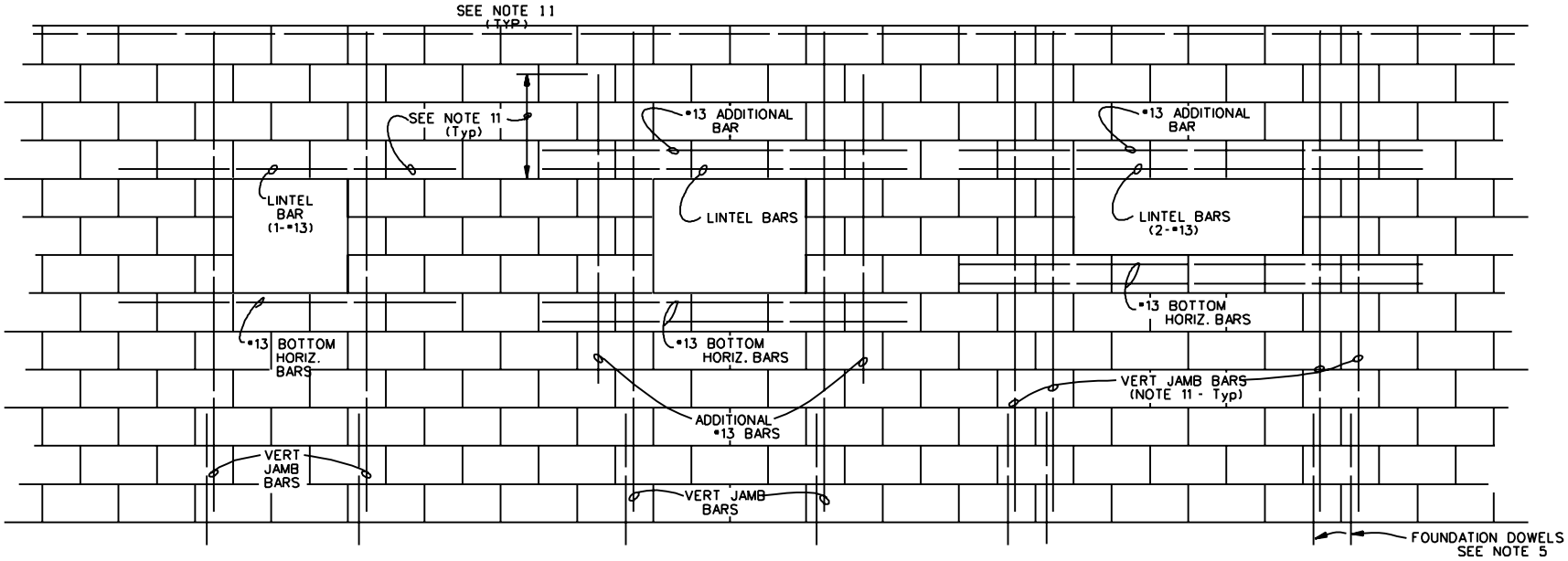

OPENINGS 600mm OR LESS IN EITHER DIRECTION FOR STRUCTURAL PARTITIONS & EXTERIOR WALLS AND FOR ALL OPENINGS IN NON-STRUCTURAL PARTITIONS.

OPENINGS WHICH EXCEED 600mm BUT NOT MORE THAN 1200mm IN EITHER DIRECTION FOR STRUCTURAL PARTITIONS & EXTERIOR WALLS.

OPENINGS WHICH EXCEED 1200mm IN EITHER DIRECTION FOR STRUCTURAL PARTITIONS & EXTERIOR WALLS.

REINFORCED CMU SEISMIC DETAILS

REINFORCEMENT AROUND WALL OPENINGS

SEE "REINFORCED SEISMIC CMU NOTES" ON PLATE S46.

THIS PLATE IS NOT TO SCALE.

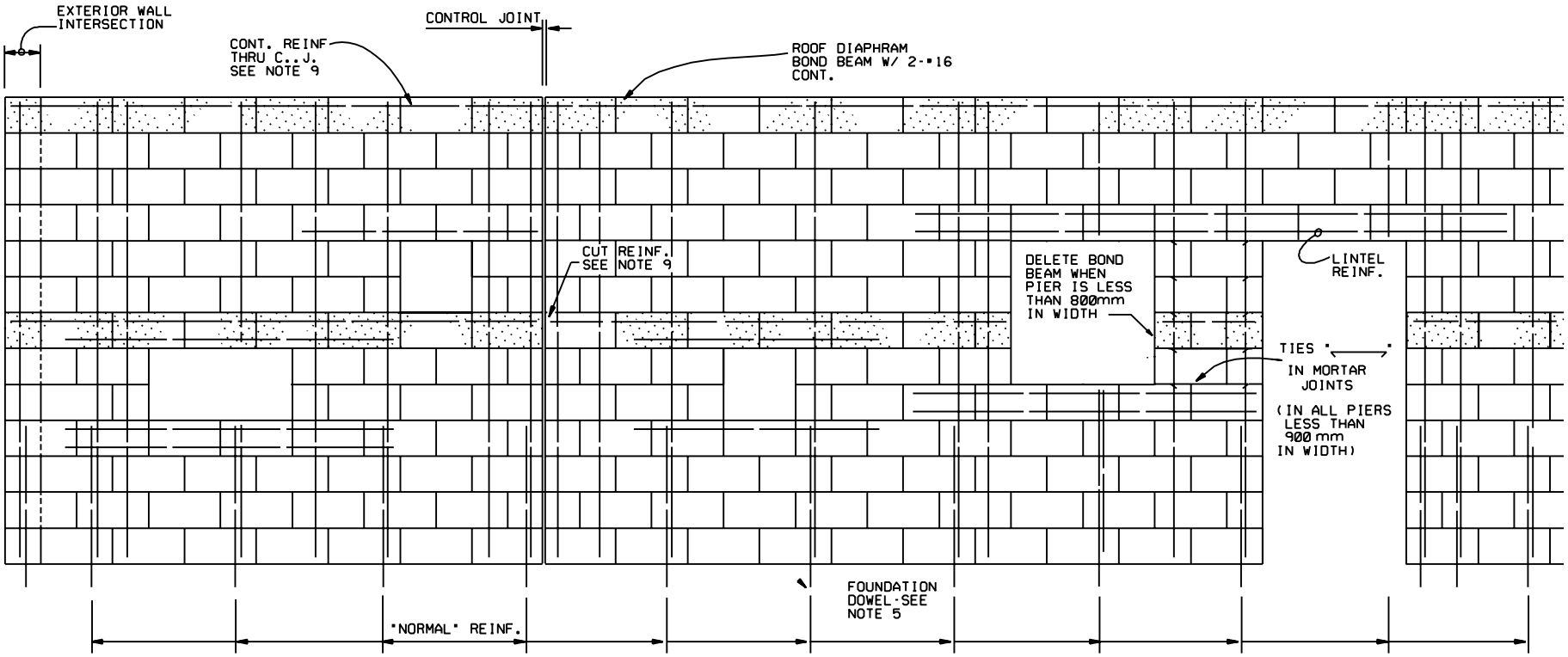

OPENING W/LINTEL BOND BEAM COMBINATION

TYPICAL CONTROL JOINT

TYPICAL WALL PIER

TYPICAL REINFORCED CMU SEISMIC DETAILS

SEE "REINFORCED SEISMIC CMU NOTES" ON PLATE S46.
THIS PLATE IS NOT TO SCALE.

REINFORCED HOLLOW CMU (SEISMIC DESIGN CATAGORIES C & D ONLY)

1. ALL CMU SHALL BE 2 - CELL BLOCK AND HAVE A SPECIFIED COMPRESSIVE STRENGTH OF 14 MPa (2,000 psi) ON NET ARE AT 28 DAYS.

2. MINIMUM MORTAR COMPRESSIVE STRENGTH - 12.4 MPa (1,800 psi) AT 28 DAYS.

3. CELLS WHICH CONTAIN REINFORCING STEEL SHALL BE FILLED SOLIDLY WITH 14 MPa (2,000 psi) CONCRETE, OR GROUT, INCLUDING BOND BEAMS, LINTELS AND PILASTERS.

4. VERTICAL CELLS TO BE FILLED SHALL HAVE VERTICAL ALIGNMNET SUFFICIENT TO MAINTAIN A CLEAR UNOBSTRUCTED CONTINUOUS VERTICAL CELL NOT LESS THAN 50 X 75 MM IN PLAN DIMENSIONS.

5. FOUNDATION DOWELS SHALL EXTEND A MINIMUM OF 30 DIAMETERS INTO THE FOUNDATION CONCRETE AND 40 DIAMETERS INTO THE MASONRY WALL OR PARTITION. LAPS OR SPLICES OF REINFORCING STEEL IN MASONRY SHALL BE 600 MM OR 40 BAR DIAMETERS, WHICHEVER IS GREATER. THERE SHALL BE A FOUNDATION DOWEL FOR EACH VERTICAL REINORCING BAR. EXCEPT AS NOTED FOR JAMB BARS IN NOTE 12.

6. VERTICAL WALL REINFORCING SHALL EXTEND CONTINUOUSLY FROM THE TOP OF FOUNDATION TO EMBED AT LEAST 150 MM INTO ROOF DIAPHRAGM BOND BEAM, OR TO TOP OF PARAPET WHEN PARAPET EXITS.

7. AN ADDITIONAL VERTICAL BAR WITH FOUNDATION DOWEL, SAME SIZE AND LENGTH AS THE NORMAL REINFORCING BAR, SHALL BE PLACED.

   A. ON EACH SIDE OF CONTROL JOINTS.
   B. AT INTERSECTION OF EXTERIOR WALLS.
   C. AT INTERSECTION OF INTERIOR SHEAR WALLS W/EXTERIOR WALLS.

8. ALL INTERIOR STRUCTURAL WALLS (SHEAR AND/OR BEARING) SHALL HAVE INTERMEDIATE BOND BEAMS LOCATED AT THE SAME LEVELS AS EXTERIOR BOND BEAMS.

9. BOND BEAM REINFORCING STEEL FOR INTERIOR AND EXTERIOR WALLS SHALL BE CONTINUOUS THROUGHOUT, EXCEPT AT CONTROL AND ISOLATION JOINTS.

   A. AT CONTROL JOINTS INTERMEDIATE BOND BEAM REIN-FORCEMENT SHALL BE DISCONTINUOUS. REINFORCEMENT IN BOND BEAMS AT FLOOR AND ROOF DIAPHRAGM LEVELS SHALL BE CONTINUOUS.

   B. AT ISOLATION JOINTS ALL BOND BEAM REINFORCING STEEL SHALL BE CUT.

10. LOCATION AND DETAILS OF CONTROL AND ISOLATION WALL JOINTS SHALL BE AS DETAILED ON THE DRAWING.

11. BARS AROUND PERIMETER OF OPENINGS SHALL EXTEND NOT LESS THAN 40 BAR DIAMETERS OR 600 MM, WHICHEVER IS LARGER, BEYOUND CORNER OR OPENING. VERTICAL JAM BARS WILL BE THE SAME SIZE AND NUMBER AS NORMAL VERTICAL REINFORCING. FOUNDATION DOWELS FOR THESE BARS AROUND OPENINGS ARE ONLY REQUIRED WHEN BAR DEVELOPMENT LENGTH DOES NOT EXIST BELOW THE OPENING.

12. HORIZONTAL AND VERTICAL REINFORCING SHALL BE _____

    (DESIGNERS SHALL COMPLETE THIS NOTE TO DEFINE WALL REINFORCEMENT REQUIREMENTS, INCLUDING JOINT REINFORCING. COORDINATE REINFORCING ON STRUCTURAL AND ARCHITECTURAL DRAWINGS. SEE NOTE TO DESIGNER BELOW.)

NOTE TO DESIGNER:
MINIMUM AREA OF STEEL AND MAXIMUM SPACING OF BARS SHALL CONFORM WITH CHAPTER 11 OF FEDERAL EMERGENCY MANAGEMENT AGENCY PUBLICATION 302, PROVISIONS FOR SEISMIC REGULATIONS FOR NEW BUILDINGS AND OTHER STRUCTURES. THE MINIMUM REINFORCEMENT REQUIRED TO PROVIDE DUCTILE PROPERTIES FOR A SEISMIC DISTURBANCE MAY NEED TO BE INCREASED TO CARRY BUILDING DESIGN LOADS. THE DESIGN STRUCTURAL ENGINEER SHALL DESIGN THE TYPICAL WALL SECTION, LINTELS ABOVE OPENINGS, WALL STIFFINERS AT SIDES OF OPENINGS AND WALL PIERS FOR THE DEAD, LIVE, WIND AND SEISMIC LOADS ACTING ON THE WALL AND INCREASE THE MINIMUMS AS REQUIRED TO CARRY THESE LOADS.

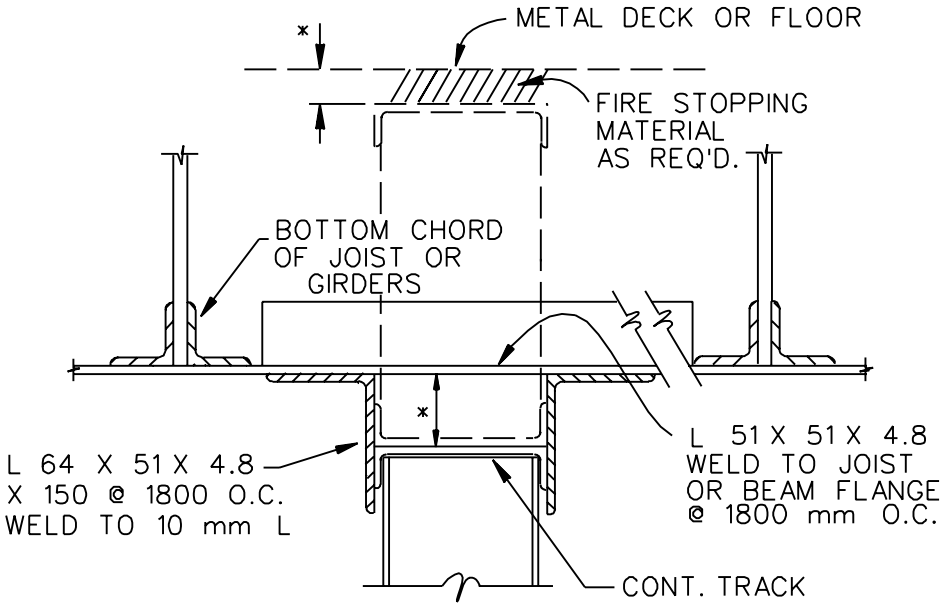

PARALLEL TO JOISTS AND GIRDERS

* MINIMUM CLEARANCE OF 25 mm IS FOR SLAB ON GRADE FLOORS OR 15 mm FOR SUPPORTED OR RIB-MAT SLABS BUT CLEARANCE SHOULD NOT BE LESS THAN LIVE LOAD DEFLECTION OF ROOF OR FLOOR ABOVE.

NOTES:

1. WHEN STUDS EXTEND TO DECK OR FLOOR ABOVE, PROVIDE * MINIMUM CLEARANCE WITH LATERAL SUPPORT AT BOTTOM CHORD.
2. OTHER SUPPORT DETAILS WHICH PROVIDE DEFLECTION CLEARANCE AND LATERAL SUPPORT REQUIREMENTS MAY BE USED.

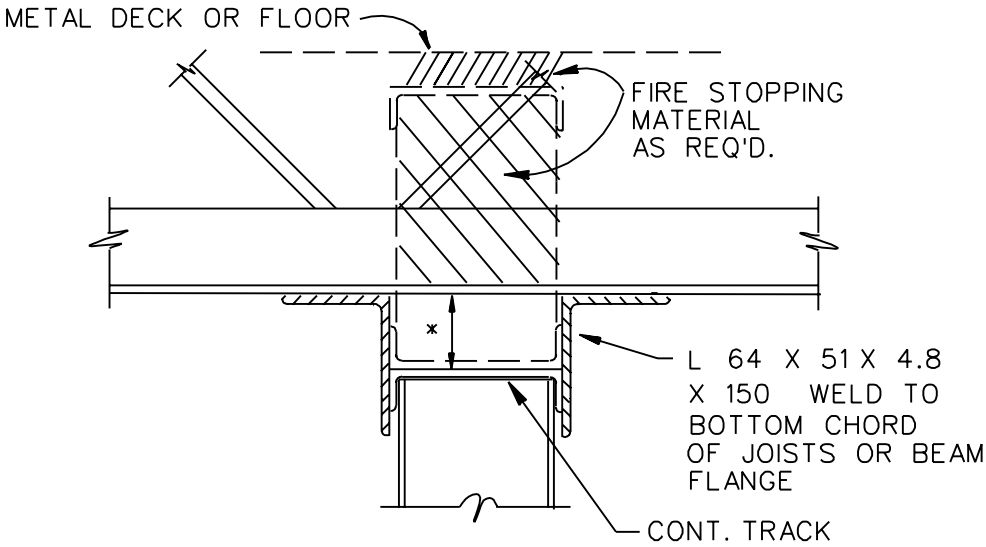

PERPENDICULAR TO JOISTS AND GIRDERS

METAL STUD PARTITION LATERAL SUPPORT

(When Cross Wall Support Spacing Exceeds 2400 mm)

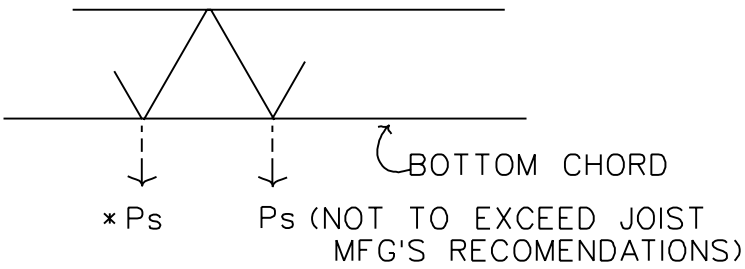

(A) BOTTOM CHORD LOADING AT PANEL POINTS

* NOTE:

CONTRACTOR SHALL COORDINATE ALL SUPERIMPOSED LOADS WITH THE JOIST MANUFACTURER PRIOR TO JOIST INSTALLATION.

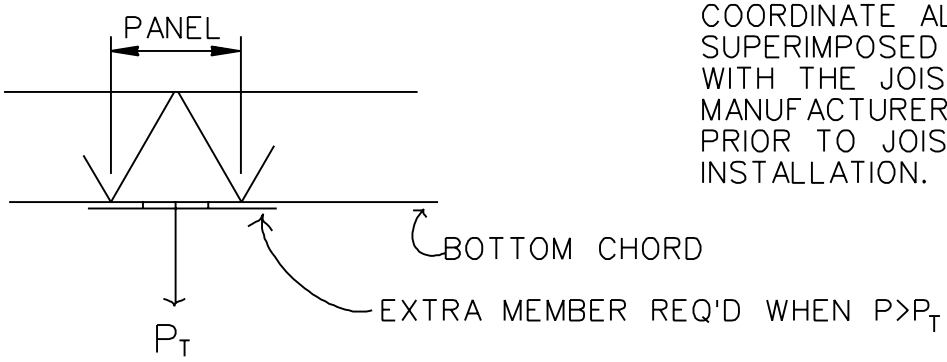

(B) BOTTOM CHORD LOADING BETWEEN PANEL POINTS

** "P_T" IS THE TOTAL RESULTANT FORCE APPLIED AT MID-SPAN OF JOIST PANEL. IF "P_T" IS IN EXCESS OF 225 N, REINFORCE THE BOTTOM CHORD PER (B) ABOVE. TYP. LOADS INCLUDE CEILING (+), MECHANICAL EQUIPMENT AND ELECTRICAL EQUIPMENT AMONG OTHERS.

(+) EXAMPLE:

FOR A HANGER SPACING SUPPORTING A ONE SQ. METER AREA THE CEILINGS ARE CONSIDERED TO WEIGH 50 kg/sq. meter.

"P_T" FOR CEILING = $(50 kg/m^2)(1.0\ m^2)(9.8 N/kg) = 490N$

DESIGN EXTRA MEMBER FOR LOAD OF 490-225 = 265N

STEEL JOIST BOTTOM CHORD LOADING DETAIL

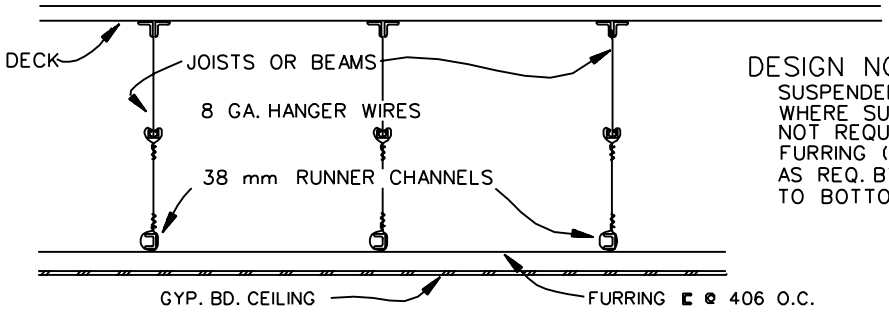

DESIGN NOTE:
SUSPENDED CEILING IS SHOWN. WHERE SUSPENDED CEILING IS NOT REQUIRED, ATTACH FURRING (CHANNELS OR STUDS AS REQ. BY SPAN) DIRECTLY TO BOTTOM OF JOIST OR BEAMS.

MAX. JOIST SPACING	HANGER SPACING	FURRING ⊏	SIZE
1220	1220	0.62 THICK	22 ⊔
1525	1070	0.62 THICK	41 ⊏
1830	915	0.62 THICK	64 ⊏
2135	915	0.62 THICK	64 ⊏
2440	765	0.62 THICK	92 ⊏

GYPSUM WALLBOARD CEILING

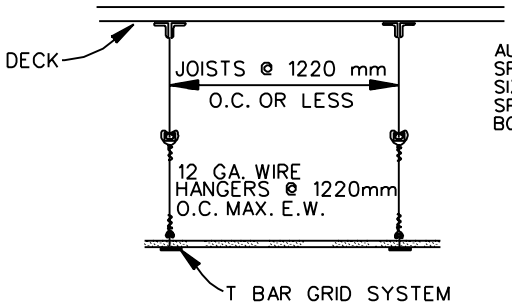

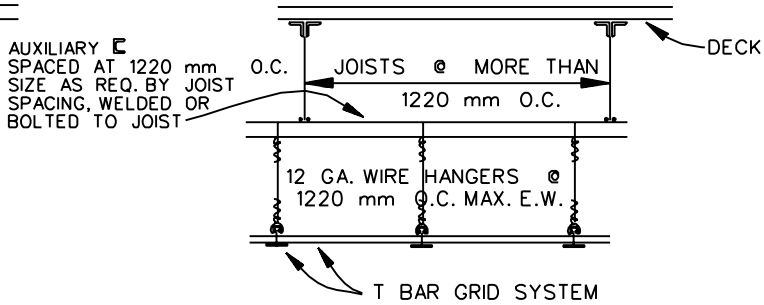

ACOUSTICAL TILE CEILING

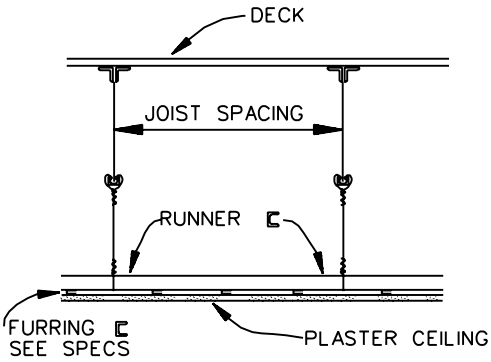

JOIST SPACING	HANGER SIZE	RUNNER SIZE	⊏	SPACING
914	8 GA.	38	C.R.	1220
1220	8 GA.	38	C.R.	915
1525	6 GA.	38	H.R.	915
1830	6 GA.	38	H.R.	915
2135	6 GA.	51	H.R.	915
2440	B.F.	64	H.R.	915

C.R. = COLD ROLLED; H.R. = HOT ROLLED
B.F. = BOLTED FLAT (10 mm Ø BOLTS & 25 X 5 mm BAR)

PLASTER CEILING

SUSPENDED CEILING DETAILS

DESIGN NOTE:

1. WHERE HANGER SYSTEM IS INTERRUPTED BY ANY ITEM (SUCH AS MECH. DUCTS) AN AUXILIARY SUSPENSION SYSTEM MUST BE SHOWN. CEILINGS MAY BE HUNG FROM A CONCRETE FLOOR OVER METAL FORM SYSTEM PROVIDED HANGERS ARE PROPERLY DETAILED.
2. SEISMIC DESIGN IS REQUIRED FOR SUSPENDED CEILING SYSTEMS IN STRUCTURES WITH SEISMIC DESIGN CATEGORIES OF C AND HIGHER. SEISMIC FORCES ARE PERSCIRBED IN SECTION 6.2.6 OF FEMA 302.

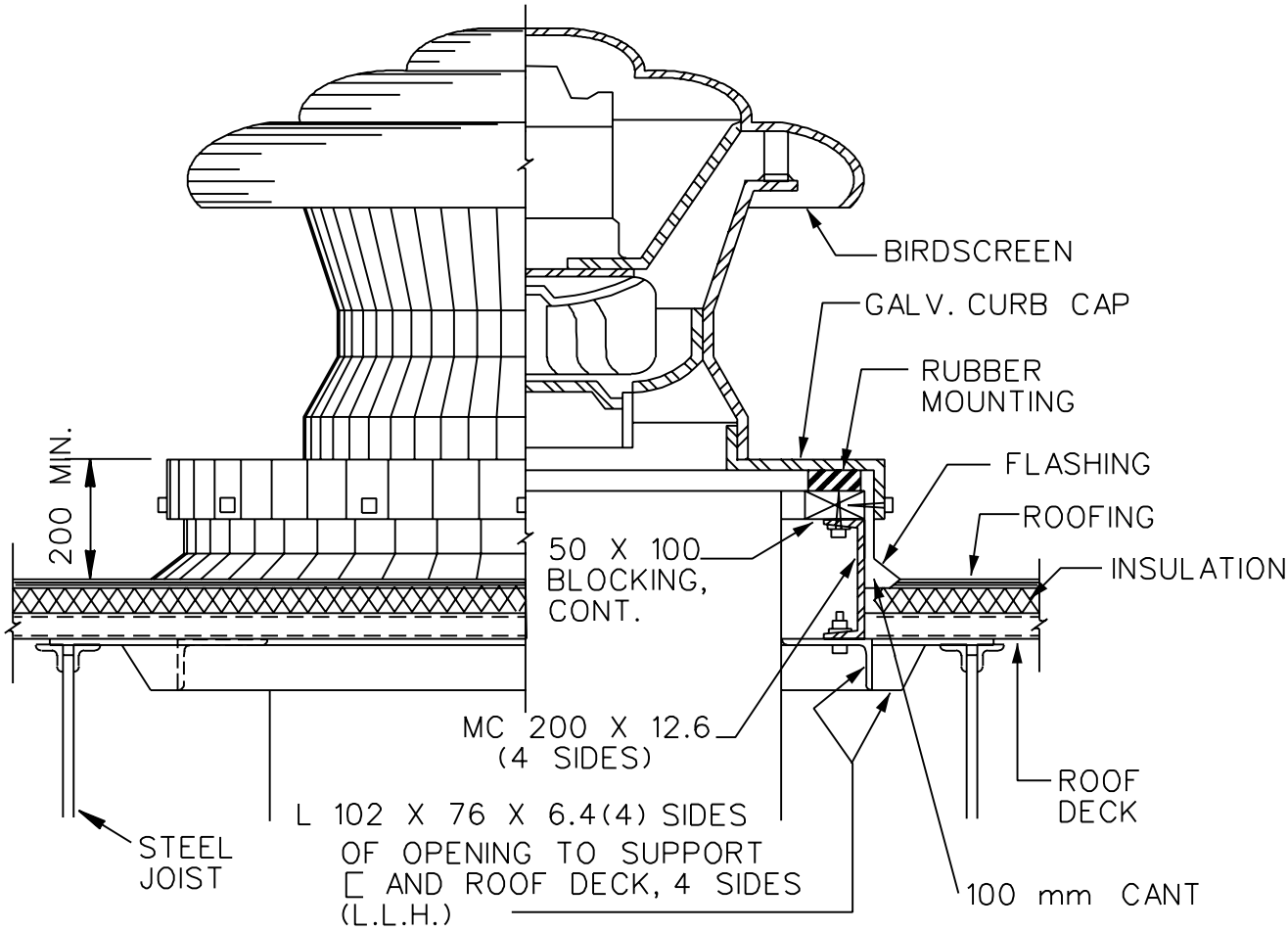

ROOF VENT FRAMING - STEEL CONSTRUCTION

N.T.S.

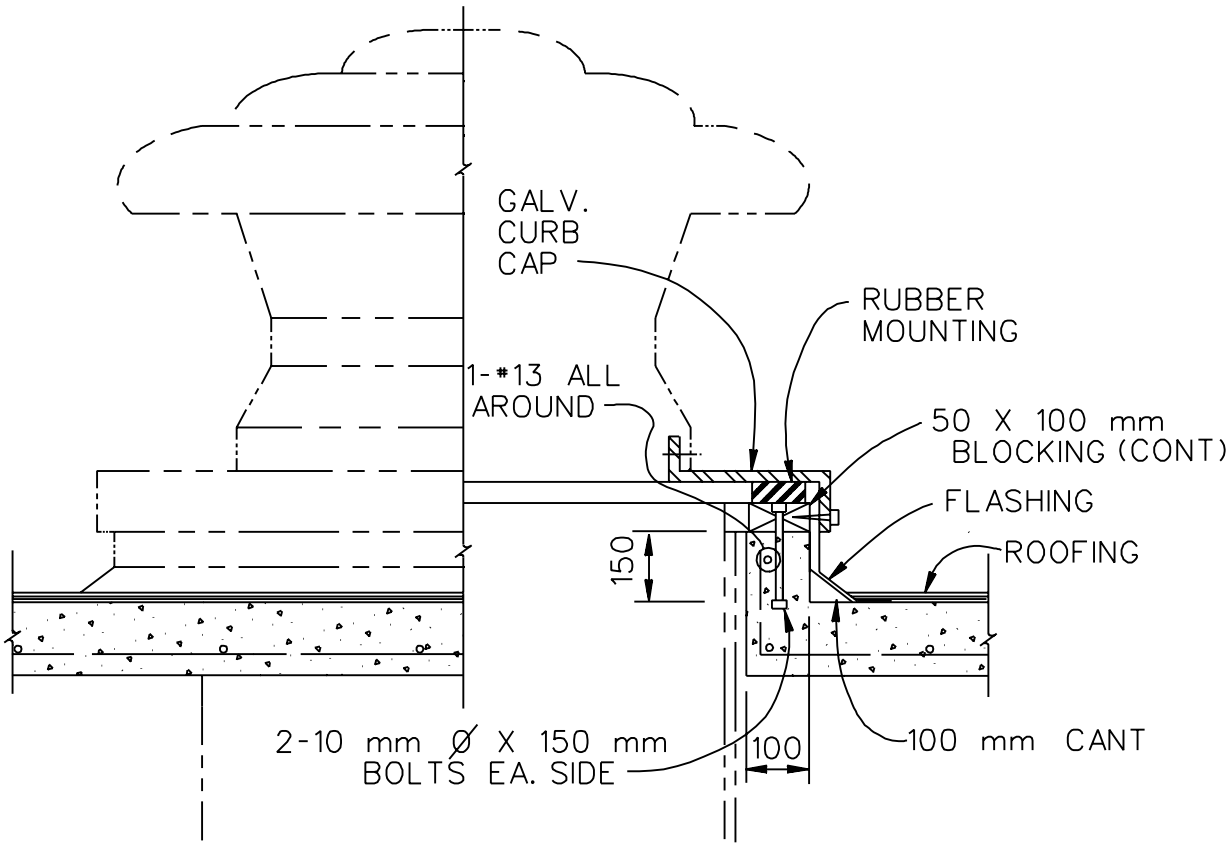

ROOF VENT - CONCRETE CONSTRUCTION

N.T.S.

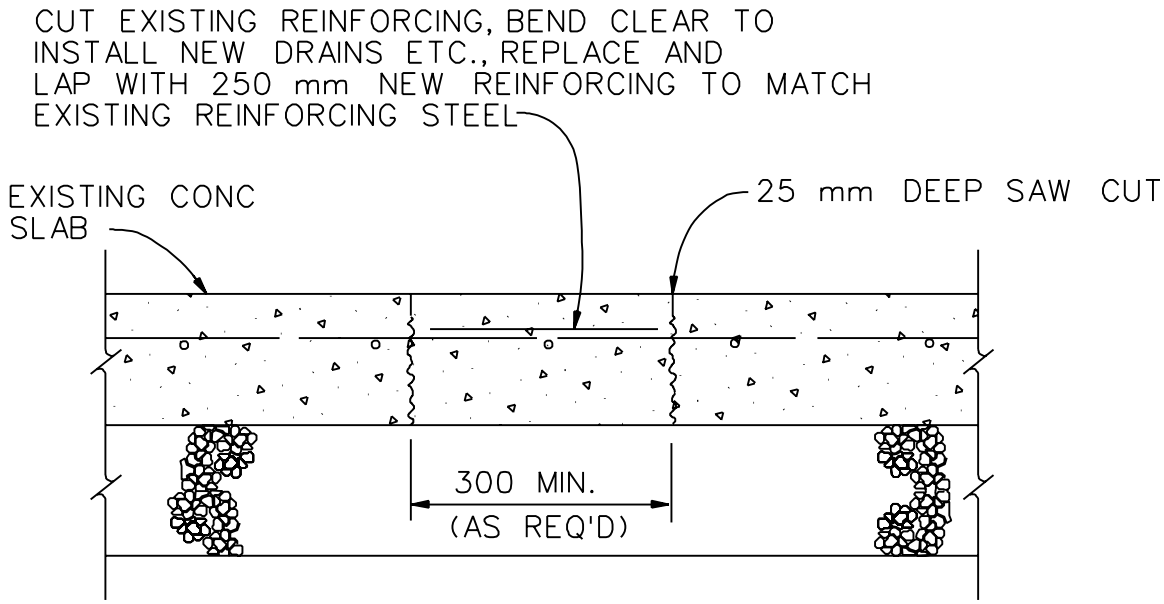

EXISTING SLAB REMOVAL & REPLACEMENT

FOR NEW FLOOR DRAIN AND PLUMBING

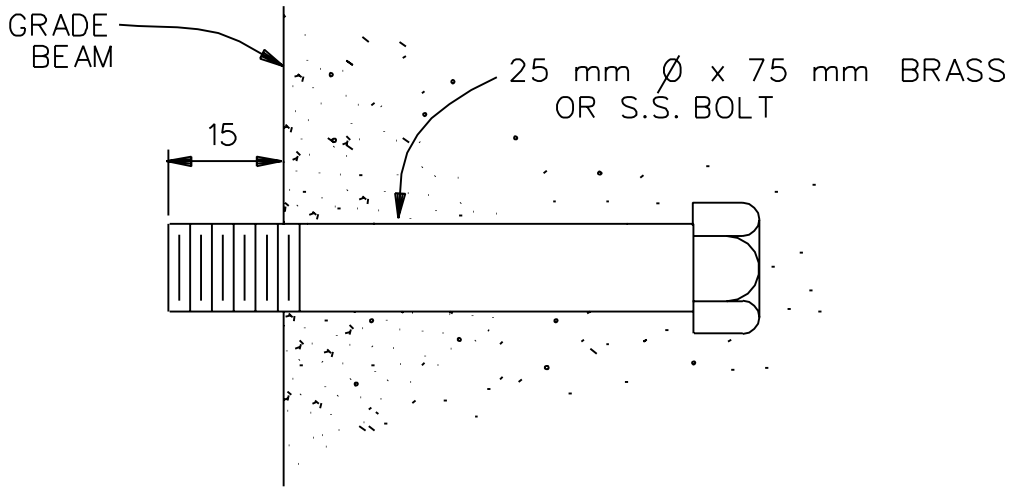

BENCH MARK DETAIL

THE FOLLOWING NOTE TO BE PLACED ON CONTRACT PLANS:

NOTE:

INSTALL BENCH MARK IN GRADE BEAM APPROX. 150 mm ABOVE FINISHED GRADE, WHERE SHOWN ON PLAN. AFTER FORMS ARE STRIPPED, OBTAIN ELEVATIONS AND FURNISH THEM TO THE CONTRACTING OFFICER, TO THE NEAREST 1/1000 OF A METER. PRIOR TO FINAL BUILDING ACCEPTANCE, OBTAIN AND FURNISH AN ADDITIONAL SET OF BENCH MARK ELEVATIONS TO THE CONTRACTING OFFICER.

LOCATIONS OF BENCH MARKS ARE SHOWN ON FOUNDATION PLAN.

DESIGN NOTES:

B.M. SHALL BE PROVIDED IN AREAS WHERE EXPANSIVE SOIL CONDITIONS ARE ENCOUNTERED, SUCH AS SAN ANTONIO ("SPECIAL DESIGN" - LOCATIONS).

PROVIDE 3 PER SIDE OF BUILDING, ONE EACH CORNER AND ONE AT ℄ OF BUILDING. PROVIDE ADDITIONAL B.M. TO LIMIT SPACING TO MAX. OF 15 METERS O.C. FOR LONG SIDES. WHEN BUILDING SIDE/S LONGER THAN 50 METERS. PROVIDE A MINIMUM OF 3 B.M. ON EACH PROJECTING LEG OF T AND L SHAPED BUILDINGS.

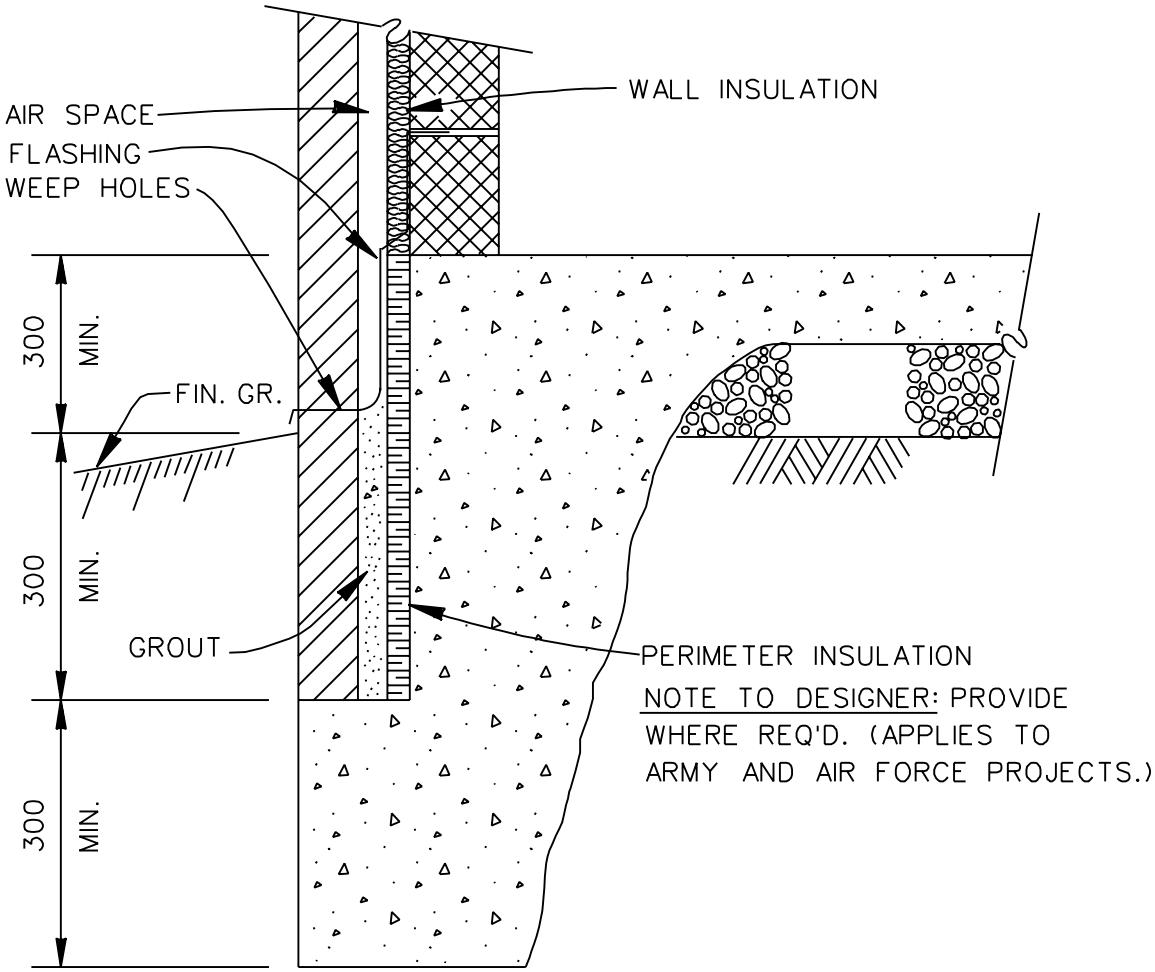

PERIMETER INSULATION

(RIBBED MAT SLAB CONSTRUCTION)

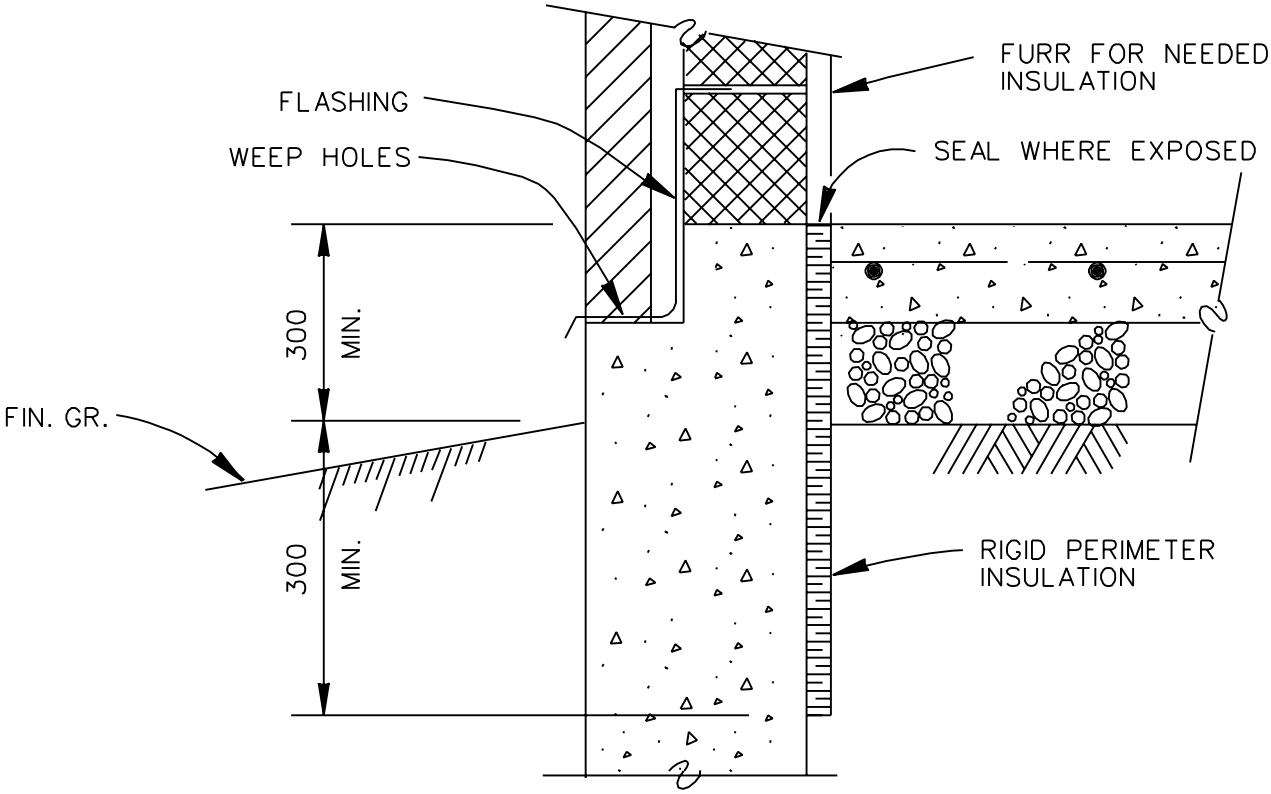

FOR REINFORCED WALLS

PERIMETER INSULATION

(SLAB ON GRADE CONSTRUCTION)

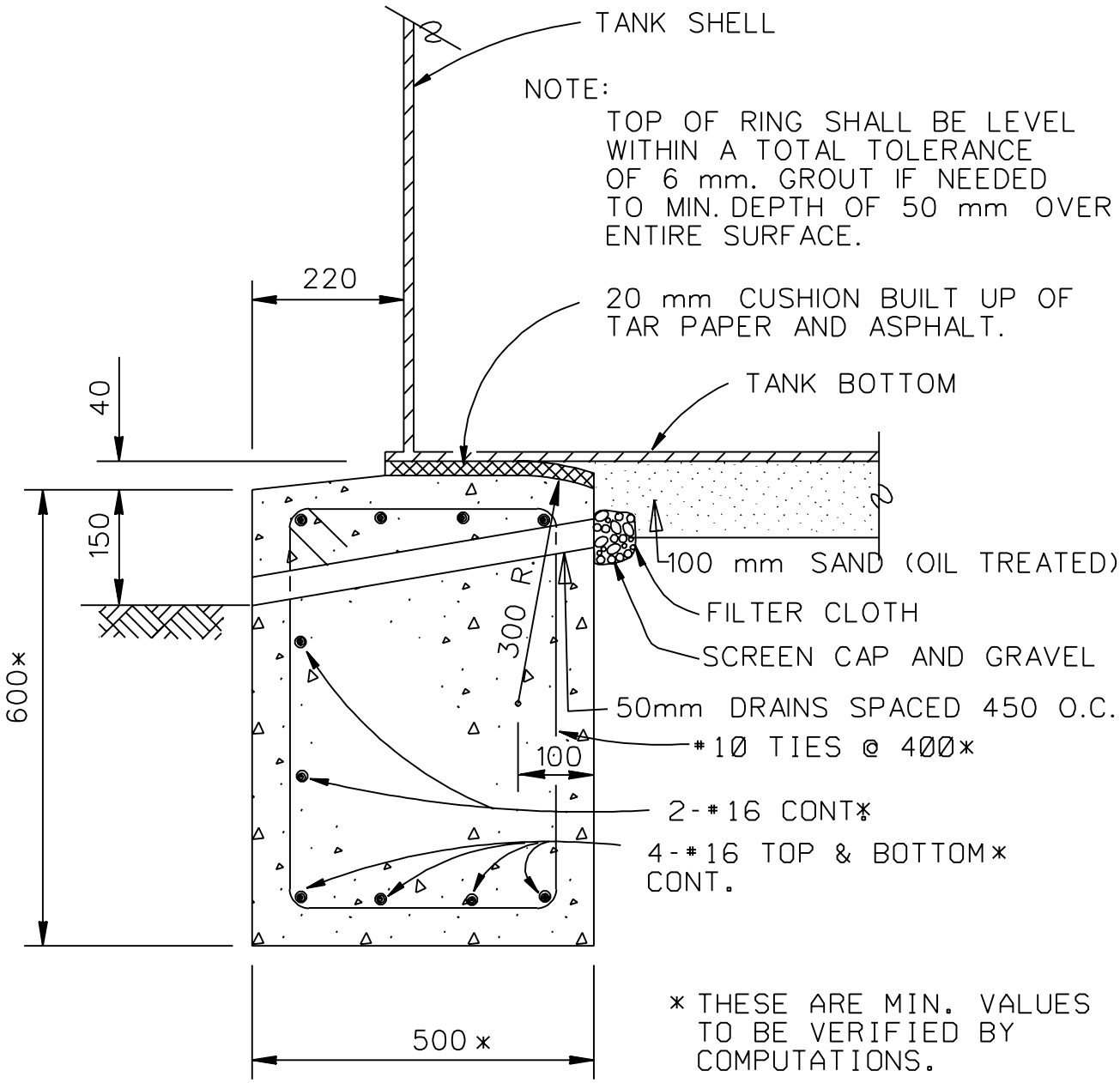

FUEL STORAGE TANK

(2 100 000 L)

TYPICAL DETAIL

CONCRETE RING FOUNDATION

PLATE S56

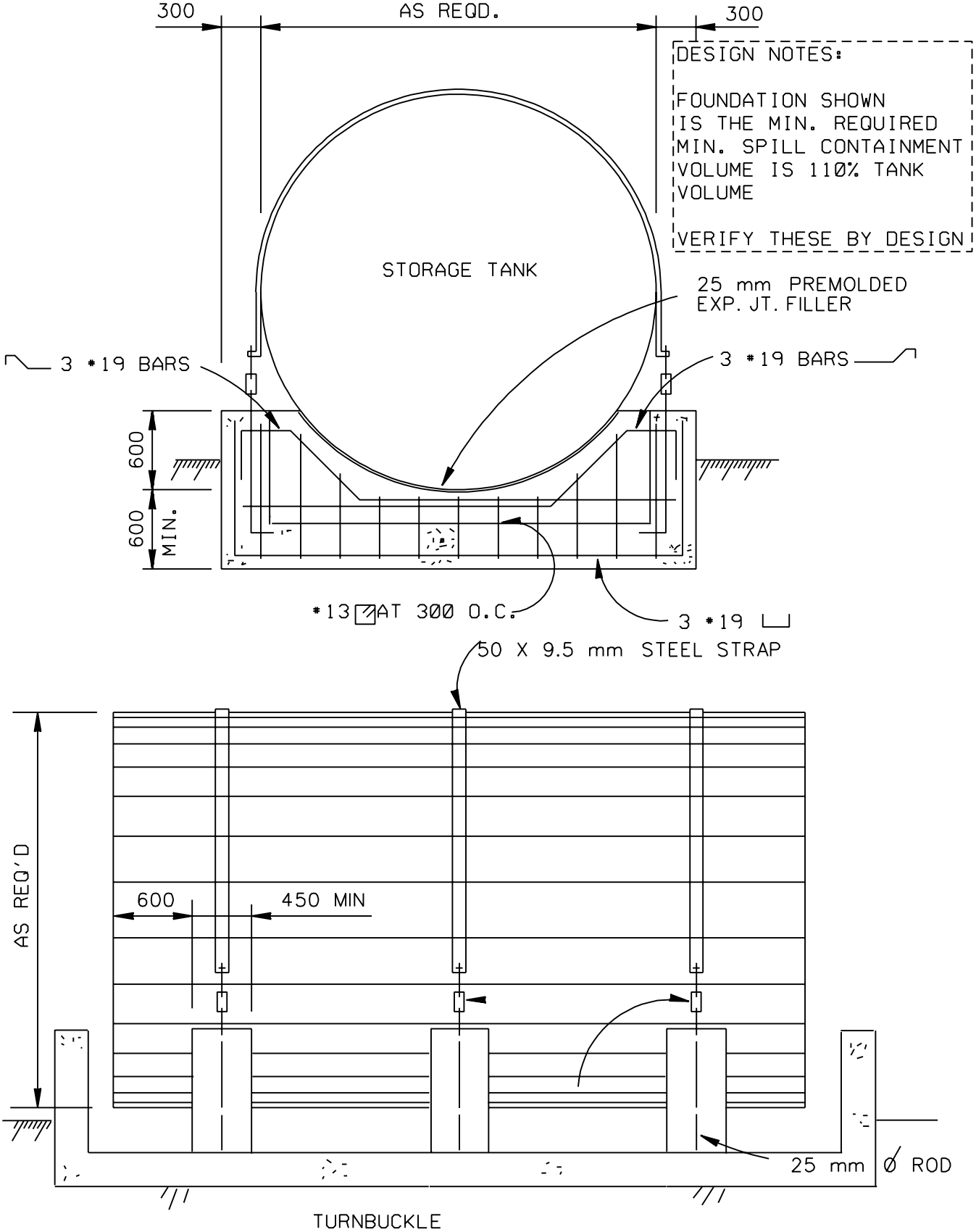

ABOVE-GROUND STEEL STORAGE TANK FOUNDATION

NORMAL CONDITIONS

PLATE S57

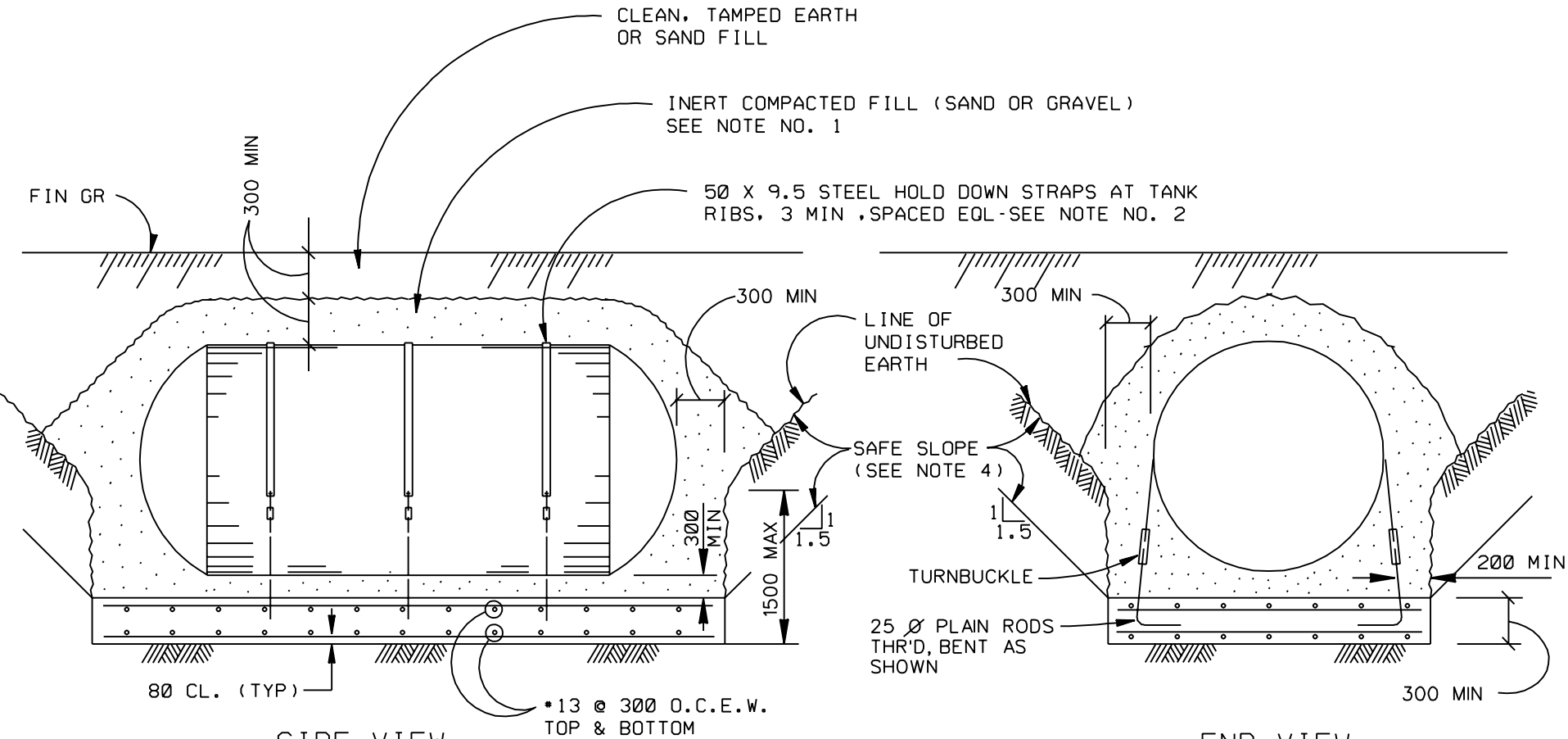

DESIGN NOTES:

1. INERT FILL SHALL BE NATURALLY ROUND AGGREGATED, CLEAN, & FREE FLOWING, W/PARTICLE SIZE NOT LESS THAN 3 mm OR MORE THAN 20 mm DIA.

2. CORROSION PROTECTION, SPILL AND OVERFILL PROTECTION, AND LEAK DETECTION SHALL CONFORM WITH EPA 510-K-95-002.

3. DESIGNER SHALL CHECK BUOYANCY CONDITION TO INSURE THESE MINIMUM REQUIREMENTS ARE ADEQUATE.

4. STEEPER EXCAVATION SLOPES SHALL BE APPROVED BY A REGISTERED P.E.

UNDERGROUND FUEL STORAGE TANK FOUNDATION

PLATE S58

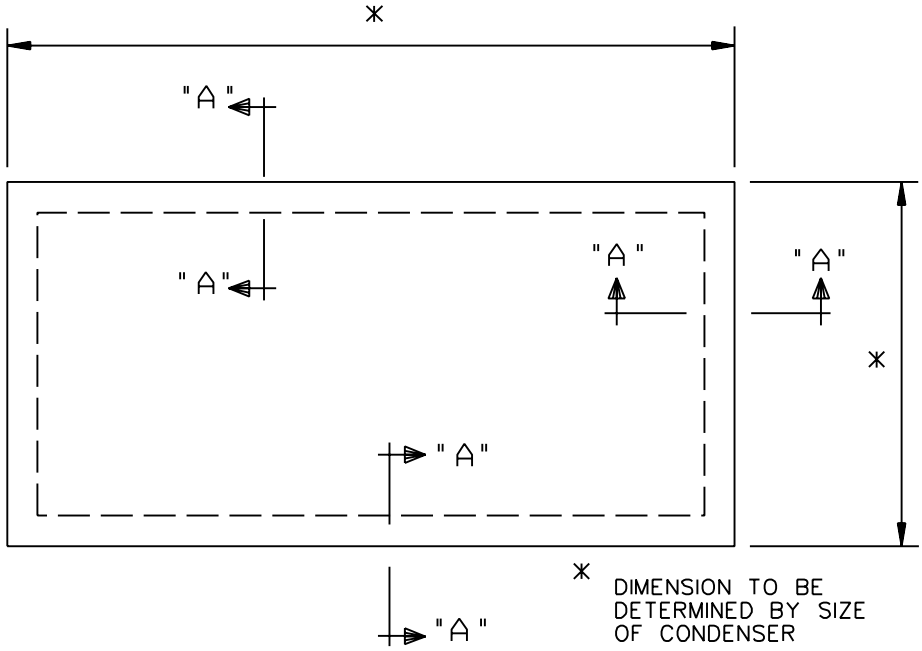

PLAN

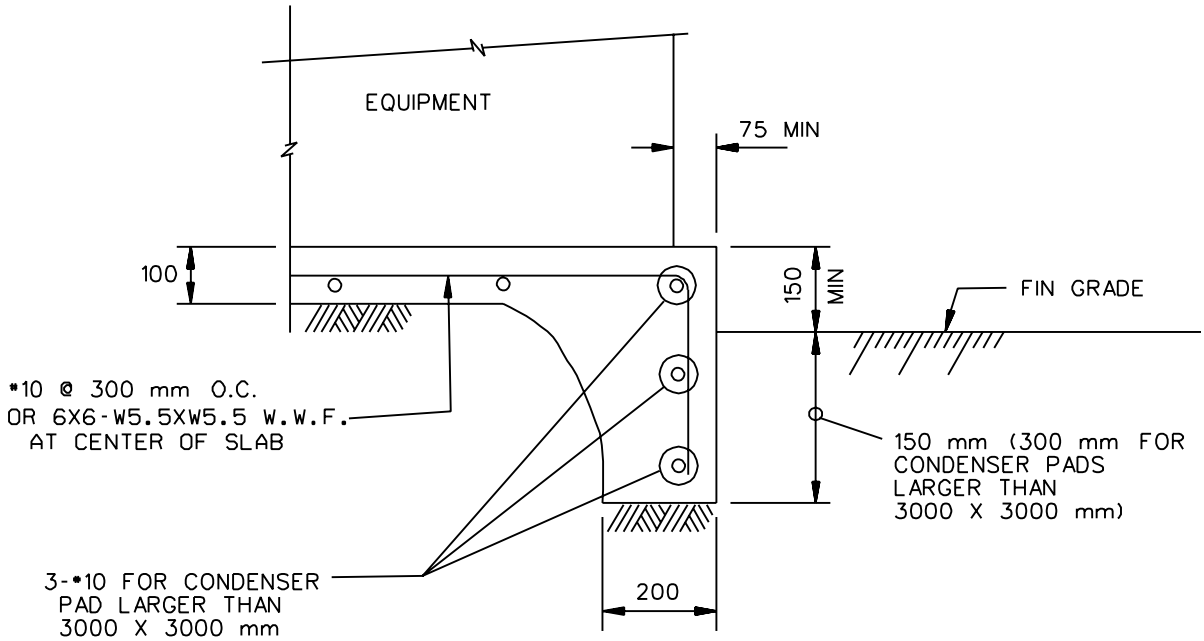

SECTION "A-A"

CONDENSER OR ELECTRICAL EQUIPMENT FOUNDATION DETAILS

NOT TO SCALE

PLATE S59

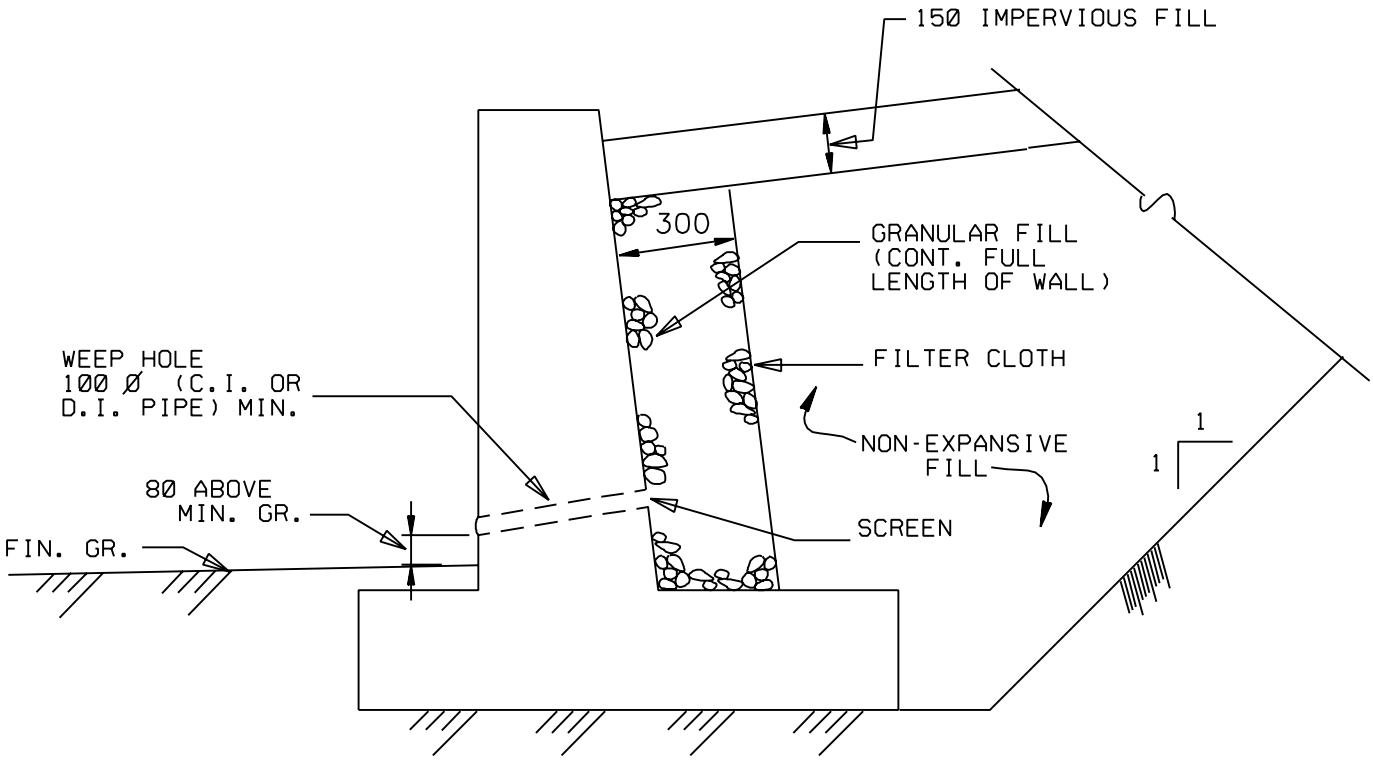

RETAINING WALL DRAINAGE

APPENDIX B

CHAPTER IV

DESIGN CHECKLIST - STRUCTURAL

STRUCTURAL. The checklist lists many important items required for quality structural plans that comply with Corps of Engineers Criteria. It is not a comprehensive checklist of items to assure that structural plans are complete.

1. Pier and grade beam schedules should coincide with foundation/floor plans, details and other associated data.

2. Foundation, grade beam and slab dowels and their spacing should be identified on plan or by detail.

3. Identify all materials below slabs-on-grade and ribbed mats including non-expansive fill capillary water barrier and vapor barrier.

4. Show locations and provide details for all construction joints, weakened plane joints, isolation joints, contraction joints in slabs-on-grade and ribbed mats.

5. Structural steel framing members shapes, sizes, etc. should be detailed in accordance with the AISC Manual of Steel Construction. For large buildings, provide a column schedule as well as any other tables and schedules that would simplify the drawings.

6. Critical steel connections should be detailed. If simple steel connections are not detailed, verify that the Engineer of Record will approve the structural adequacy of connection details selected by the steel fabricator and give sufficient beam reaction information on the drawings for design of the connection.

7. Provide details for joist seats requirements for sloped end bearings, details of joist wall penetrations and identify bearing elevations. Check that the required strength of top chord extensions and extended ends is specified. Show loads and dimension any special joist configurations for design of special joists by the joist manufacturer on drawings.

8. Foundation, floor and roof plans should have a north arrow and have column grid lines that coincide with the architectural drawings.

9. Provide general notes in accordance with the AEIM.

10. Show control and expansion joint locations for CMU walls and provide details for them. Identify minimum bearing dimensions for beams on masonry.

11. Identify horizontal and vertical CMU wall reinforcing on the details or by table. Verify that the in-wall stiffeners, adjacent to wall openings and piers between openings, are structurally adequate for horizontal and vertical loads.

12. Provide lintel details and a lintel schedule for large buildings.

13. Identify metal deck fasteners and their spacing for floor and roof diaphragms.

14. Provide connection details between floor and roof diaphragms and shear/load bearing walls and/or steel framing.

15. Verify that the spacing, depth, thickness and section modulus for light gage steel studs and joists for walls, roof and floors are shown. Verify that the connection of the wall track to the floor and details of the track at the top of the wall are adequate to carry wall horizontal loads and/or isolate the stud wall from the frame deflection in accordance with the design assumptions. Verify that the studs adjacent to openings are adequate to carry horizontal wall loads. Provide details showing stiffeners and bracing and/or schedules showing number and size for connectors between light gage steel framing members and between this framing and the building structural frame are shown.

16. When standing seam metal roofs are used, show the design wind uplift pressures for the roof on the plans, and detail sub-purlins and their connection to the building frame as required for support of the standing seam roof.

CHAPTER V

MECHANICAL

Table of Contents

1. INTRODUCTION
   1.1 Criteria
   1.2 Metrication

2. GENERAL CRITERIA
   2.1 Design Policy and Guides
      2.1.1 References
      2.1.2 General
      2.1.3 Additional Criteria
      2.1.4 Seismic Design
      2.1.5 Piping Design for Underfloor Piping
      2.1.6 HVAC Design
      2.1.7 Force Protection

3. DESIGN INSTRUCTIONS
   3.1 Guide Specifications
   3.2 Standard Mechanical Symbols
   3.3 Symbols on Standard Plans
   3.4 Design Temperatures
      3.4.1 Heating
      3.4.2 Air Conditioning and Evaporative Cooling
   3.5 Project Plans
      3.5.1 Avoid Specific Manufacturer
      3.5.2 Scales and Lettering
      3.5.3 Mechanical Floor Plans
      3.5.4 Drawing Organization
      3.5.5 Future Building Expansions
      3.5.6 Preliminary Plans
      3.5.7 Plumbing, Fixtures and Drains
      3.5.8 Fire Protection
      3.5.9 Heating
      3.5.10 Fuels
      3.5.11 Boiler, Utility and Equipment Rooms
      3.5.12 Chimneys and Gas Flues
      3.5.13 Ventilation
      3.5.14 Air-conditioning
      3.5.15 Mechanical Equipment Noise Control
      3.5.16 Fuel Supply
      3.5.17 Refrigeration
      3.5.18 Steam and High Temperature Water Systems

Table of Contents (cont.)

3.5.19 Food Service Equipment
3.5.20 Medical Facilities
3.5.21 Design of Sewer and Water Treatment Plants
3.5.22 Solar Design
3.5.23 Energy Monitoring and Control Systems
3.5.24 Underground Petroleum Storage and Dispensing
3.5.25 Ductwork

4. ENERGY AND ECONOMIC STUDIES
4.1 Economic Studies
4.1.1 Economic Feasibility Studies
4.1.2 Basic Requirements for General Design Studies
4.1.3 Basic Criteria
4.1.4 Supplemental Criteria/Standards
4.1.5 Additional Guidance
4.1.6 Computer Programs
4.1.7 Economic Analysis Programs
4.1.8 Fuel Costs
4.2 Energy Studies
4.2.1 General Requirements
4.2.2 Different from Economic Studies
4.3 Alternative HVAC Systems
4.3.1 Submittal Schedule
4.4 General Design Studies, Report
4.4.1 What and Why
4.4.2 Calculation Method
4.4.3 Study Results
4.4.4 Calculations
4.4.5 Report Format

5. DESIGN ANALYSIS PREPARATION
5.1 Project Definition and Concept Submittals
5.2 Final Submittals
5.3 Requirements for Medical Facility Design
5.4 Special Projects

6. MECHANICAL CHECKLISTS

Appendix A -- Equipment Selection Data Sheet

Appendix B -- Plates M1 through M15

Appendix C -- Recurring Deficiency Checklist

Appendix D -- Evaporative Cooling System Design Criteria

CHAPTER V

MECHANICAL

1. **INTRODUCTION**:

1.1 **Criteria**. **These instructions apply to Southwestern Division and District Offices**. All mechanical work shall be designed in accordance with: The Architect-Engineer's (A-E) contract; all applicable technical manuals (TM for Army and AFM for Air Force); Technical Instructions (TI for Army) engineer technical letters (ETL); Corps of Engineers guide specifications (CEGS); and these instructions. For Army construction, the Architectural and Engineering Instructions (TI 800-01) "Design Criteria" is the basic criterion. For Air Force construction, Air Force Manuals (AFM), Regulations (AFR), and Military Handbooks (MIL-HDBK) are the basic criteria. Any conflict between criteria should be reported to the Engineering Manager. Applicable codes, standards, etc., that are not specifically for military design, and that are listed in specifications are required criteria unless they conflict with military criteria.

1.2 **Metrication.** The metric units used are the International System of Units(SI) adopted by the U.S. Government as described in Chapter I, paragraphs 3. and 4.2.1.

2. **GENERAL CRITERIA**

2.1 **Design Policy and Guides**:

2.1.1 References:

2.1.1.1 ER 1110-345-100 Design Policy for Military Construction

2.1.1.2 HQUSACE Architectural and Engineering Instructions "Design Criteria" (USACE TI 800-01)

2.1.1.3 Military Handbook (MIL-HDBK-1190) Facility Planning and Design Guide

2.1.2 General: Most major mechanical design criteria are referenced in this AEIM. The USACE TI 800-01 is the basic criterion for Army construction. Military Handbook MIL-HDBK-1190 is the basic criterion for Air Force construction. Comply with all codes, Standards, etc., that are listed in the specifications or referenced specifically for military design. Military criteria govern when a conflict occurs with nonmilitary criteria. Other sources of criteria include

Engineering Technical Letters (ETL's) issued by HQUSACE and the HQ US Air Force, Air Force General Design Guidance and Design Criteria Letters issued by the Division and District(s).

2.1.3 Additional criteria may be given to the designer that is general in nature or applicable to a specific project. These criteria will be documented and become part of the project design instructions.

2.1.4 Seismic design and criteria for piping, equipment and supports are included in TI 809-04 and Guide specification CEGS 13080. Fire sprinkler systems shall be in accordance with NFPA 13.

2.1.5 Piping designs for underfloor piping in expansive soils will be in accordance with SWDED-G letter Dated 29 Sep 1983, ER 1110-345-722.

2.1.6 HVAC designs will consider the effects of elevation in sizing equipment and ductwork. Schedules shall indicate SCFM or ACFM at elevation.

2.1.7 Force Protection mechanical features will be designed and provided in accordance with TM 5-853-1/2/3/4 for Army and AFMAN 32-701 Volumes 1/2/3 for Air Force.

3. DESIGN INSTRUCTIONS

3.1 **Carefully study the guide specifications** applicable to the project prior to starting final design to ensure that all stated requirements and references are coordinated.

3.2 **Use ASHRAE standard mechanical symbols** in the preparation of all mechanical drawings. See Chapter VIII for drafting standards. The A-E should obtain standard CADD symbols and abbreviations from the District responsible for the design. For standardized control designs use the standard symbols provided. Additional symbols contained in MIL-STD-17B and ASHRAE Handbook of Fundamentals are to be used if necessary symbols are not shown in the above documents.

3.3 **On standard plans**, do not change symbols to conform to paragraph 3.2; however, change plumbing fixture "P" designations as required to meet HQUSACE requirements for handicapped criteria.

3.4 **Design Temperatures and Conditions**:

3.4.1 Heating:

3.4.1.1 Outside Conditions:

3.4.1.1.1 Standard Designs (Plans)-- Outside design temperature used for Standard Designs have three design temperature ranges defined; -29^{0}C to -18^{0}C ,-18^{0}C to -6.5^{0}C, or -6.5^{0}C and above (-20^{0}F to 0^{0}F, 0^{0}F to +20^{0}F, or +20^{0}F and above). The designer will select the appropriate temperature range and loads based on the local site conditions.

3.4.1.1.2 Original (New) and Site Adapt Designs**--** The outside design temperatures for Army and Air Force designs are listed in TM 5-785 (AFM 88-29) unless otherwise instructed. Refer to USACE TI 800-01, TI810-10, and MIL-HDBK-1190 for design parameters.

3.4.1.2 Inside Conditions:

3.4.1.2.1 Original Designs - New or Site Adapt projects for both Army and Air Force: 1) 20^{0}C (68^{0}F) for administrative areas, 2) 13^{0}C (55^{0}F) for working/warehouse areas and 3) 4.5^{0}C (40^{0}F) for unoccupied areas requiring freeze protection. Criteria include TI 810-10, USACE TI 800-01, and MIL-HDBK-1190.

3.4.1.2.2 Special Projects - Projects such as Hospitals, will be designed in accordance with DOD 4270.1-M (Army) and MIL-HDBK 1191 (Air Force), and other special criteria provided by the User. Design criteria of other special projects will be based on Design guides and guidance provided by the user.

3.4.1.3 Load Factors -- Heat gain and loss calculations may be increased up to 10% to account for unanticipated or undefined loads or changes in space usage. Increase boiler and heating coil capacity by 15% for normal pickup. Where the control system utilizes a night setback strategy, the equipment capacity may be increased by 30%, if justified by the load calculations. Ignore internal and solar loads in calculations for sizing of heating equipment. Include forced and natural ventilation. Where pipes exceed 30 meters in length, calculate piping losses and add to the boiler capacity.

3.4.2 Air-conditioning and Evaporative Cooling:

3.4.2.1 Outside design temperatures--Engineering Weather Data, a Joint Services Manual, (i.e., TM 5-785, Army and AFM 88-29, Air Force) is the source of design conditions unless

otherwise directed. For design of evaporative cooling system, see Appendix D. For specific design criteria refer to USACE TI 800-01, TI 810-10, and MIL-HDBK 1190 for Air Force projects.

3.4.2.2 Inside Design temperatures are 25.5^{0}C,D.B.(78^{0}F,D.B.) and 50 percent Relative Humidity, for mechanical cooling and 26.5^{0}C (80^{0}F) for evaporative cooling or as instructed for each individual project.

3.4.2.3 Load Factors-- Increase room heat gain calculations up to 10% to account for unanticipated or undefined loads or changes in space usage. Cooling equipment size may be increased (not to exceed 10%) to compensate for "pick up" loads due to set forward control design strategies if justified in the cooling load calculations. Include forced and natural ventilation loads in HVAC load calculations. Size and arrange cooling equipment and cooling coils to satisfy calculated latent as well as total cooling loads. Avoid the over sizing of cooling equipment to prevent short cycling and resultant reduction of moisture removal.

3.4.2.4 Special Designs: The design Ambient conditions for Critical Facilities (i.e., Computer and electronics systems, etc.) will be based on the 1% Dry bulb and 1% Mean Coincident Wet bulb for cooling. Loads for humid areas (for example Fort Polk, La.) will be based on the 2-1/2 % dry bulb and 5% wet bulb. See the USACE TI 800-01, MIL-HDBK 1190, and ETL 1110-3-455 for Humid Area definition and criteria.

3.4.2.5 Other Design Criteria: Design criteria are also included in various Technical Instructions Technical Manuals, ASHRAE Handbooks, Engineering Technical Letters, NFPA, CEGS, Project Books, Southwestern Division Numbered Criteria Letters, and special instructions for individual projects.

3.5 **Project Plans:**

3.5.1 Avoid designing around a particular manufacturer's equipment. Assure the availability of equipment to suit the design by selecting the products of three or more manufacturers. Outline an equipment footprint (and elevation) on project plans that will allow all three manufacturers equipment to fit within the space allotted. See Appendix A for an Equipment Selection data form to be included in the Design Analysis. Do not use manufacturer’s name on contract drawings.

3.5.2 Scales and lettering for all project plans will be in accordance with the district CADD Manual and be legible and easily read when reduced to half-size plans. Provide a

minimum of 1:50 scale plans and sections of all congested mechanical systems including HVAC ductwork, air handling units, plumbing in mechanical rooms, mechanical/electrical equipment mezzanines, toilets, kitchen areas, etc., (other special areas will be included). Use double line ductwork on drawings prepared for final and corrected final contract designs.

3.5.3 Mechanical floor plans: Do not show all mechanical systems on one floor plan. Exceptions require written approval from the District. Provide Separate sheets for plumbing, heating and air-conditioning, sprinkler systems, etc. Develop plans, elevations and sections sufficiently to show contractors how to install mechanical items and ensure that major equipment, piping and ductwork, do not interfere with structural members and electrical equipment. Conceal or furr-in all ductwork and piping for housing, recreational, school, administrative, and medical facilities. Provide exposed ductwork and piping in equipment, boiler, utility, storage, and other rooms of this nature. Provide access panels for fire dampers, valves, traps and air vents. Closely coordinate the design and location of piping and ductwork with architectural, structural and electrical design to eliminate interference and hold furring-in to a minimum. In accordance with NEC, insure that water piping is not located over transformers, panelboard or other electrical equipment. Where electrical items are shown in hazardous areas requiring appropriately rated electrical equipment, add note on mechanical drawings: "All equipment in this area shall be (insert appropriate electrical rating) as shown on Electrical Drawings." Indicate by means of dashed lines the scaled outline of all space dedicated to electrical panels and switchgear in mechanical equipment and boiler rooms to eliminate the possibility of equipment interference. In accordance with NEC, do not install piping, ductwork or equipment in or above dedicated spaces. Check three or more equipment manufacturers to determine the maximum weight and dimensions of the equipment. Coordinate the equipment weights with the structural design. The layout of mechanical equipment shall reflect a clear access path of 1 meter wide by 2 meters high, or greater, to all major equipment. Provide dashed lines on the plans to reflect required maintenance space for coil, tube and filter removal and maintenance space as recommended by the equipment manufacturer. Base the maintenance space on the composite equipment footprint to accommodate the greatest dimension of the manufacturers. Minimize the use of overhead mechanical equipment or other overhead items requiring periodic adjustment but where used coordinate method of access with the user and identify on drawings. To enhance maintainability of mechanical equipment and preserve roof integrity and longevity the use of roof

mounted equipment is to be minimized. Coordinate the location of ceiling diffuses, grilles, and registers with electrical and architectural design and includes in the reflected ceiling plan.

3.5.4 Drawing Organization: In general organize the work by grouping the following design elements on the drawings.

3.5.4.1 Demolition sheets with separate legends.

3.5.4.2 Legends, general notes and related material.

3.5.4.3 Plumbing floor plans, schedules and specific notes.

3.5.4.4 Plumbing riser diagrams, isometric diagrams.

3.5.4.5 Plumbing details.

3.5.4.6 HVAC schedules.

3.5.4.7 HVAC floor plans.

3.5.4.8 HVAC elevations, sections and design specific details, mechanical room floor plans.

3.5.4.9 General HVAC details, standard details such as coil piping details, boiler piping details, wall and floor piping penetrations, etc.

3.5.4.10 Sequence of controls, schematics, ladder diagrams.

3.5.4.11 Fire protection plan(s) and details.

3.5.5 For buildings where future expansion is contemplated, run piping, ducts, etc., where there will be a minimum of future revisions.

3.5.6 Preliminary Plans including Project Definition (Air Force), Project Engineering Phase and Concepts(Army) (10 to 35% design completion). Show heating, ventilation, air-conditioning, plumbing, sprinkler systems, and special items such as elevators and hoists equipment locations and space requirements on the plans. Also, include Government furnished equipment consisting of kitchen and/or medical equipment, flight simulators, etc. Show space for maintenance such as tube bundle removal. Show single-line layouts of ducts. Provide completed equipment schedules on the plans. Samples of schedules are shown in Appendix B.

3.5.7 Plumbing, Fixtures and Drains: Make provisions for handicapped in accordance with the Americans With Disabilities

Act unless otherwise directed. See USACE TI 800-01 for Army and MIL-HDBK-1190 for Air Force projects.

3.5.7.1 On the mechanical plans show all interior piping run to a point 1.5 meters from the building. Piping outside the 1.5 meters line is included in Chapter II, Civil, and shown on Utility Plans. Show sufficient riser diagrams to clarify the layout. Size pipe per the National Standard Plumbing Code. The location of plumbing fixtures is normally the function of the Architect. Show plumbing fixture "P" Number as shown in Guide Specifications.

3.5.7.2 Electrical Water Cooler (EWC) shall be of wall-hung type and conform to ARI 1010, with the type and size shown on the plans as necessary.

3.5.7.3 Provide floor drains as required by TM5-810-5 for Army and AFM 88-8 for Air Force projects. In utility and boiler rooms, provide floor drains or a covered trench leading to a drain sump, to keep above floor drain lines to a minimum. In UOPH's / UEPH's provide a floor drain in the laundry room. Do not provide floor drains in toilets with less than three water closets. Locate toilet drains under stall partitions and shower (dressing areas) drains in front of showers except for private showers.

3.5.7.4 Do not provide floor drains for Hangar areas of major hangars, shelters, or docks used as a closed wash rack. Slope floors 1 vertical to 150 horizontal to a steel grate-covered trench drain just inside of the door. Detailed instructions will be provided as needed.

3.5.7.5 Provide all buildings with a minimum of two outside wall hydrants or yard hydrants in accordance with TM 5-810-5/AFM 88-8. Where concealment of hydrant and piping is required but not feasible, use yard hydrants.

3.5.7.6 Coat and wrap all underground air piping. For industrial uses provide standard weight black steel pipe with malleable iron fittings. Intake piping to air compressors shall be nonmetallic or corrosion resistant.

3.5.7.7 Chrome plate all exposed piping in Air Force and Army kitchen scullery areas. Make every effort to keep piping out of kitchen mopping area.

3.5.7.8 Show stop valves on the drawings for all equipment supply and return connections for normal maintenance and replacement.

3.5.7.9 Vent domestic dryers with 100mm (4-inch) ducts and commercial dryers with 200mm (8-inch) ducts. For a dryer, duct runs of more than 3 meters or with more than two elbows and duct rises of more than 2 meters requires the use of supplemental powered exhaust to provide sufficient duct velocity to move the lint exhausted by the dryer. Equip sleeves through the wall with hood and back-draft damper constructed of aluminum or stainless steel.

3.5.7.10 Provide reduced pressure backflow preventer to isolate all potential point sources of toxic chemicals. Mount the backflow preventer in an accessible location in accordance with the National Standard Plumbing Code.

3.5.7.11 Roof drainage rainfall intensity rate and duration frequency guidance is in Chapter II of these Engineering Instructions. Use 15-minute peak and see the National Standard Plumbing Code for drainage calculations.

3.5.8 Fire Protection: MIL-HDBK-1008B is the basic design standard with AFFF systems designed to Air Force ETL 90-10 and Army ETL 1110-3-411.

3.5.8.1 Original designs require the services of a qualified fire protection engineer. Requirements are detailed in Southwestern Division Numbered Criteria Letters Part XI, Chapter 1, Letters 1-28, 1-29, and 1-30.

3.5.8.2 Hand fire extinguishers are furnished by the installation.

3.5.8.3 Design requirements:

3.5.8.3.1 Total Design; Provide a separate plan for the fire protection sprinkler system including one section through the sprinkled area. Show on the plans the available water supply GPM and pressure, riser locations, area classification design densities, seismic requirements, type sprinkler heads, and other appropriate items. Obtain water flow test data from the Base Civil Engineer or DEH. Show on the plans the total pressure (include the pressure drop through the backflow preventer, as high as 100 kPa) of the sprinkler system and show on the plans the total water demand of the sprinkler system (including hose stream requirements). Compare the flow test data to the water requirements to determine the supply pipe size and the need for fire pumps and water storage. Size underground pipe. Provide complete calculations in the Project Engineering and Project Definition submittal.

3.5.8.3.2 Performance design; In most cases performance designs are no longer allowed by the Air Force commands. Do

not provide a performance design unless approved by the Air Force. If performance design is allowed, do not show sprinkler heads or branch piping on the plans unless specifically requested. Indicate on plans the available water flow and residual pressure and the static pressure of the main. Indicate area classification, design densities, seismic requirement, type sprinkler heads, and riser locations. Provide a separate plan for the fire protection system with a minimum of one section through the sprinkled area. Compare the flow test data to the water requirements to determine the supply pipe size and the need for fire pumps and water storage. Size underground pipe. Provide calculations in the concept submittal. For Project Definition submittals provide calculations showing whether or not a fire pump is needed.

3.5.8.3.3 Coordinate all fire alarm signaling devices required to provide a fully integrated fire alarm/protection system.

3.5.8.3.4 Backflow preventers. For Air Force and Army designs, provide backflow prevention in accordance with National Standard Plumbing Code.

3.5.8.4 Provide fire dampers as required by NFPA 90A. In addition provide fire dampers in 1-hour fire rated enclosures for shafts stairs, elevators, etc., heater/boiler rooms with flames, and storage areas containing combustible storage. Show all required fire dampers and access doors on the plans.

3.5.9 <u>Heating</u>:

3.5.9.1 Size boilers for individual plants per Engineer Technical letters, TI810-l0 (Army) and MIL HDBK 1190 (Air Force).

3.5.9.2 Hot-water systems: Use two-pipe reversed return systems whenever practicable. Pitch pipe up in the direction of flow where possible. Show pipe pitch and air vents at high points on drawings. Design piping system without pockets to prevent the accumulation of air and keep venting to a minimum number of high points. Provide sectionalizing valves for simplified maintenance.

3.5.9.3 Provide automatic air relief valves at all high points in piping systems.

3.5.9.4 In buildings heated by radiation, state minimum height of radiator bottom cover. Coordinate height with installation of electrical outlets to prevent any interference. Where necessary to clear electrical receptacles, install fin-tube radiators with the bottom of

radiator cover 400mm above the floor, space permitting. Coordinate heater space requirements with architectural when radiation heating is installed in toilet rooms. In quarters, offices, administrative and recreation buildings, equip hot water fin-tube radiators with solid front, slotted, sloping top covers. Provide thermostatic control of radiation heaters.

3.5.9.5 In runs of pipe 15 meters and longer or where required in shorter runs, indicate on project plans the location of all anchors, bends, laps and expansion loops to provide for pipe expansion.

3.5.9.6 Load factors for sizing steam traps are as follows:

Main drips	3
Pipe coils in still air	3
Pipe coils submerged in water	4
Unit heaters, blast coils, etc.	3
H. W. Generators, kettles, etc.	4
Autoclaves, sterilizers	5

3.5.9.7 Discharge multiple boilers induced draft fans into a common breeching or flue.

3.5.9.8 Provide controls for individual building condensate pumping units with the storage tank. Provide controls for boiler feed pumps with the boiler. Provide adequate receiver storage capacity.

3.5.9.9 For building pipe tunnel design, include details on plans showing proper support of piping. Minimum sizes of a tunnel to be 1.200 meters wide by 1.5 meters clear height. Comply with CEGS, AFR 88-44, Air Force and Army ETL's for Underground heat distribution systems. Force Protection requirements shall be met.

3.5.9.10 Indicate by note on the heating schedules or plans the entering air temperature, system pressure, entering and leaving hot water temperature, mounting height and/or other information. The above is required to enable contractors to make proper selection of radiation heaters, unit heaters, heating coils and other equipment.

3.5.9.11 Controls for heating systems: See paragraph 3.5.14.7

3.5.10 <u>Fuels</u>:

3.5.10.1 Fuels used for cooking at individual installation are covered by special instruction for each project.

3.5.10.2 For Army, select space heating fuels per AR 420-49, HQUSACE TI 800-01, and SWD Criteria Letters.

3.5.10.3 Fuel selection for Air Force is to be in accordance with specific project data, and MIL-HDBK 1190, and Air Force ETL's.

3.5.10.4 Do not use electric resistance heating for comfort applications unless justified by life cycle cost analysis.

3.5.11 Boiler, Utility and Equipment Rooms:

3.5.11.1 Ensure that the floor plan includes adequate space (including headroom and maintenance) for mechanical and electrical equipment regardless of any mechanical space requirements identified in programming documents. This must be carefully checked on standard designs. Ensure that building arrangements and equipment access for service and/or replacement of coils, tube bundles, motors and other equipment items are sufficient and shown to scale on the drawings. Arrange pipe connections to coils and equipment containing tube bundles (converters, hot water generators, water chillers, etc.) to allow pulling coil or tube bundles without disassembling piping. Separate boiler and heater rooms from refrigeration equipment as required by codes. In other cases provide an economic analysis to determine if installing fuel fired equipment in a boiler/heater room segregated from other equipment is cost effective based on room ceiling and fire damper savings.

3.5.11.2 Provide all fuel fired boiler/heater rooms with fixed combustion air louvers per requirements of NFPA 54. Do not locate louvers in boiler room doors, preferably locate high on a wall. Investigate the need for combustion air heating to prevent freeze-ups. Where utility or equipment rooms are small and heat producing equipment such as compressors, hot water converters, hot water generators, steam pressure reducing stations, etc., can cause high temperatures and possible damage to electric equipment in the room, provide a wall-mounted supply fan with a motorized intake louver. Size ventilation equipment for Army and Air Force for the greater of 20 air changes per hour or 5.5^{0}C (10^{0}F) rise for summer and 10 air changes per hour for winter. Arrange supply fan and louver to prevent short circuiting, and control fan by a wide differential thermostat set to operate fan and motorized louver when room temperature exceeds 32^{0}C (90^{0}F). Do not use the supply fan to supply combustion air.

3.5.12 Chimneys and Gas Flues:

3.5.12.1 Design Chimneys, stacks and flues on Army projects per TI 810-10, TM 5-810-6 and NFPA. Design Air Force projects per AFM 88-8/1, AFM 88-8/5, and NFPA.

3.5.12.2 Provide guyed steel stacks at Ammunition Depots for all explosives operations buildings and auxiliary buildings within explosives restricted areas, and all buildings within 5km of ammunition demolition sites.

3.5.12.3 Where ladders for chimneys or stacks are considered necessary, equip ladders over 9 meters in length with a basket guard or with ladder climbers' safety device.

3.5.12.4 Obtain stack height and size for load requirements from Technical Manual and NFPA.

3.5.12.5 Locate stacks as conveniently as possible, regardless of location shown on definitive drawings.

3.5.12.6 Provide boilers and furnaces 300,000 watts (1,000,000 BTUs) and larger and smaller plants with height restrictions, with steel stub stacks and induced draft fans.

3.5.13 Ventilation:

3.5.13.1 For designs use the most stringent of ASHRAE 62-89, USACE TI 800-01 for Army, MIL-HDBK 1190 for Air Force.

3.5.13.2 Toilet rooms require mechanical ventilation. Do not recirculate toilet room air. Provide large toilet and locker rooms with mechanical ventilation.

3.5.13.3 Provide an exhaust fan in laundry room of dormitories, barracks, and BOQ's. Provide laundry (Laundromat) for Army with thermostatically controlled fan and louver. Size two-speed fans to provide 20 air changes/hour summer and 10 air changes/hour winter.

3.5.13.4 To minimize roof penetrations wall mount exhaust fans should be used where possible.

3.5.13.5 Design kitchen exhaust hoods per NFPA 96.

3.5.13.6 Design all ventilation systems per NFPA Pamphlet Numbers 90A, 90B, 91, and 96, as applicable.

3.5.13.7 The minimum ventilation rates for Army refrigerant compressor rooms for walk-in and reach-in refrigerators shall be:

3.5.13.7.1 Air cooled condensing unit with integral condensers, 400 L/s (800 CFM) of air per 750 watts (horsepower) nameplate rating, plus liter per second (CFM) required for other equipment.

3.5.13.7.2 Water cooled condensers or remote air cooled condensers, 40 L/s (80 CFM) of air per 750 watts (horsepower)nameplate rating, plus liter per second (CFM) required for other equipment.

3.5.14 Air-conditioning.

3.5.14.1 Design per Engineering Manuals, ASHRAE Handbooks, Engineering Technical Letters, NFPA, CEGS engineering notes, project book and special instructions for individual projects. Army criteria are also per the USACE TI 800-01. Air Force criteria are also per MIL HDBK 1190. Follow latest guidance regarding CFCs.

3.5.14.2 Design all air-conditioning per NFPA Pamphlet Numbers 90A, 90B, and 101.

3.5.14.3 For Army designs do not use corridors as a supply, return, or exhaust air plenum regardless of the type of occupancy. Corridors may be used as return plenum in rehab designs where no feasible space is available to install return ducts. For Air Force designs corridors may continue to be used as return air plenum for air-conditioning systems but must be equipped with fire detectors of type and location as indicated in MIL-HDBK 1190 and AF ETL's.

3.5.14.4 Air Force computer facility’s designs are per specific design-instructions and MIL-HDBK 1190, as applicable.

3.5.14.5 For occupancy diversity factors in quarters refer to USACE TI 800-01 for Army and MIL-HDBK 1190 for Air Force. Also, refer to the Engineering Instructions for type of quarters.

3.5.14.6 In general, standby air-conditioning units are not allowed and require a request for waiver of criteria. Refer to USACE TI 800-01 for Army, MIL-HDBK 1190 for Air Force, and Design Guide for U. S. Army Reserve Centers. Economic justification is required whether or not a waiver is necessary.

3.5.14.7 Provide HVAC control sequences, schematics and ladder control diagrams on drawings and coordinate with specifications. Air Force designs are per ETL 83-1, 83-1 change 1, or TI 810-11 and CEGS 15950 (HVAC Control Systems, Single Loop digital controls (SLDC) and other systems as

directed by command see Air Force projects below). Army designs are per CEGS 15950 and TI 810-11. Deviations to this must follow options for ARMY PROJECTS below. Options and necessary procedures for HVAC Controls packages follow.

3.5.14.7.1 Air Force Projects

3.5.14.7.1.1 Installation desires HVAC controls to be Direct Digital Controls (DDC) and tied into the existing energy Monitoring Control System (EMCS) in the future.

3.5.14.7.1.1.1 Option 1. User must request a waiver through their command and receive authority for sole source procurement of control equipment.

3.5.14.7.1.1.2 Option 2. Provide controls design using the SLDC system with a contractor’s option to provide a DDC system manufactured by the supplier of the base wide EMCS system

3.5.14.7.1.1.3 Option 3. If the user can provide the name of at least three (3) manufacturers who have DDC systems that have successfully interfaced with the base wide system, then specify these three manufacturers.

3.5.14.7.1.1.4 Option 4. If the installation has a multi-year procurement contract for DDC HVAC control hardware and software. The DDC hardware and software would then be government furnished by the installation to the construction contractor.

3.5.14.7.1.2 Installation desires DDC controls, but does have a known requirement for tying into a base EMCS. Competitive procurement for DDC controls under this circumstance needs only to be requested by the installation.

3.5.14.7.2 Army Projects

3.5.14.7.2.1 Installation desires HVAC controls to be DDC and be tied into the existing EMCS in the future. Options are the same as those for Air Force options 1 through 4, above.

3.5.14.7.2.2 Installation desires HVAC controls, but does have a known requirement for tying into a base EMCS. A waiver must be obtained per CESWD Numbered Criteria Letter V, 1-189.

3.5.14.7.3 Contract documents for HVAC control systems

3.5.14.7.3.1 Single Loop Digital Controls

3.5.14.7.3.1.1. Select Control Drawings from TI 810-11

3.5.14.7.3.1.2 Use CEGS 15950 for Control Specifications

3.5.14.7.3.1.3 Future tie-in to EMCS

3.5.14.7.3.1.3.1 Include EMCS Building Prep Specification, CEGS 13814

3.5.14.7.3.1.3.2 Provide Input-Output (I-O) summary for all items other than those shown on the SLDC control drawings. Clarify this by adding the following note to the bottom of the I-O Summary: **"All I-O points indicated on the HVAC control drawings shown to be 'available to the EMCS' shall be wired to the data terminal cabinet (DTC)."**

3.5.14.7.3.2 Direct Digital control

3.5.14.7.3.2.1 Control Drawings: DDC drawings (developed by Savannah District) are available through the District Engineering Manager. These drawings have the same logic as those in TI 810-11.

3.5.14.7.3.2.2 Use CEGS 15951 (Direct Digital Controls for HVAC Systems) for Control Specifications

3.5.14.7.3.2.3 Future tie-in to EMCS/UMCS

3.5.14.7.3.2.3.1 A DTC is required if other than HVAC I-O points are included (e.g. electric, gas, and water meter, etc

3.5.14.7.3.2.3.2 Use of Building Prep specification is required for specifying DTC, wiring to other than HVAC sensors and controls, pulse initiators for metering, etc.

3.5.14.7.3.2.4 Contractor option for SLDC or single manufacturer of DDC system compatible with installation's EMCS System. (For Air Force Option 2, above). Note use of this option shall be fully coordinated with the installation personnel responsible for controls maintenance. If this option is selected it will be fully documented in the 35% design analysis (points of contact, name and model of base wide EMCS system, etc.) and general note on the HVAC drawings stating to see specifications for option of DDC in lieu of SLDC.

3.5.14.7.3.2.4.1 Control drawings: SLDC package for each system shall be provided.

3.5.14.7.3.2.4.2 Specifications: Use Section 15950 and add the following after paragraph **1.2 GENERAL REQUIREMENTS:**

"1.2.1 OPTION TO SINGLE LOOP DIGITAL CONTROLS: In lieu of single loop digital controllers (SLDC) the contractor shall have the option of providing Direct Digital Controls (DDC) that are manufactured by (<u>include name of EMCS manufacturer</u>) and is capable of fully communicating with the (<u>model and/or number</u>) base wide Energy Monitoring and Control System (EMCS). If the DDC option is chosen, the following conditions apply:

1.2.1.1 All submittals shall meet those specified herein with the exception of the controller. The DDC hardware substituted for the SLDC shall be the most current model available at the time of contract award, which will function properly when connected to the specified EMCS system. A newer version of the DDC hardware can be provided, if the necessary hardware and software to make the interface with the existing base wide EMCS is also provided.

1.2.1.2 All hardware (sensors, wiring, dampers, etc.) shall meet the requirements herein specified.

1.2.1.3 All Control sequences shall be provided as specified or shown on the drawings. Commissioning procedures shall be followed as specified with references to SLDC substituted with DDC. Control point setpoints indicted on the drawings shall be capable of being changed by the operator at the field control panel, or a device (i.e. lap top computer) shall be provided as part of this contract to make changes to the set points prior to connection to the base wide EMCS system.

1.2.1.4 Connection to the base wide EMCS shall be capable of being made from a single location. All points specified or shown to be connected to the EMCS shall also be wired to this single location"

3.5.14.7.3.2.4.3 Specification 13814 (EMCS Building Prep): Replace paragraph 1.2.1 with the following:

"The contractor shall provide all services, material, and equipment necessary to prepare the control system to interface with the base EMCS when the Single Loop Digital Controls specified in Section 15950 is selected by the Contractor. When the Direct Digital Control System option is selected (see section 15950 paragraph 1.2.1), the requirements of this section shall be met, except

for the data terminal cabinet, which shall be replaced by an interface for connection to the existing EMCS. The Contractor shall demonstrate that all points, indicated on the drawings and required by the specifications, are capable of communicating with the base EMCS."

3.5.14.8 Provide an air flow schematic on the drawings showing a complete breakdown of the air distribution system including outside air, air supplied to the space(s), zone air flows and exhausted air. Utilize symbols for fans, dampers, diffuses, etc.

3.5.15 Mechanical Equipment Noise Control. Design to comply with the requirements of SWD criteria letter V 1-186, (Design Requirements to Control Noise Generated by Mechanical Equipment) and TM 5-805-4/AFM 88-37.

3.5.16 Fuel Supply:

3.5.16.1 Gas Piping Systems:

3.5.16.1.1 Provide gas meters.

3.5.16.1.2 Unless otherwise instructed, provide each building with an outdoor gas regulator with an automatic cutoff. Indicate on the project plans the normal inlet and outlet pressures, gas capacity and pressure setting of a full capacity relief valve. Provide an insulating coupling. Refer to CEGS.

3.5.16.1.3 Show gas piping on plumbing plans and designed per TM 5-8lO-6 (Army), AFM 88-8, Chapter 5 (Air Force), and NFPA No. 54.

3.5.16.1.4 L.P. gas system shall comply with NFPA and state codes.

3.5.16.1.5 Divide gas piping design work shown on drawings between site utilities plan and mechanical floor plan per the division of work in specification sections: Gas Distribution and Gas Piping.

3.5.16.2 Fuel Oil. Provide flow meters per criteria.

3.5.17 Refrigeration. Design refrigeration systems per the latest Guide Specifications, ARI and ASHRAE Standards, design guides, MIL-HDBK 1190 for Air Force and TM5-810-3 and the USACE TI 800-01 for Army.

3.5.18 Steam and High Temperature Water Systems:

3.5.18.1 Design systems per TI 8lO-10 for Army Projects and MIL-HDBK 1190 for Air Force and latest CEGS and ETLs.

3.5.18.2 Design systems wherever possible with expansion loops, bends and offsets instead of expansion joints to reduce maintenance and eliminate manholes on underground lines.

3.5.18.3 Read guide specifications notes before initiating design of underground steam distribution systems.

3.5.18.4 Show the location of existing utilities. Eliminate interference with new services, buildings, roads, etc.

3.5.18.5 Specifications for underground conduits require the contractor to provide a detailed design layout prepared by the system supplier. Therefore, show only location and size of pipe, anchors, expansion loops, Z-bends and L-bends on the design drawings. Also, provide the calculated millimeters of expansion in each direction at 90-degree bends and legs of loops so that the contractor can provide sufficient space for expansion.

3.5.18.6 Provide profiles for all underground distribution systems showing minimum cover of conduits under ditches, roads and railroads for protection from heavy traffic, etc.

3.5.19 Food Service Equipment:

3.5.19.1 Show all hood, water, sewer, air, gas, and steam connections for food service equipment. Insure those floor drains to service ice chests, refrigerators, cold pans, steam kettles and similar items are provided. Allow space on drawings to show all connections. Piping will be located in crawl spaces under kitchen area unless directed otherwise. Coordinate equipment and utility connection size with the architectural equipment list.

3.5.19.2 Use the District's latest Food Service Equipment Guide Specification.

3.5.20 Medical Facilities:

3.5.20.1 Design Air Force facilities per MIL-HDBK 1191 and as otherwise directed by the command.

3.5.20.2 Design Army facilities per MIL-HDBK 1191 and DOD 4270.1-M dated 15 Dec. 1983 or as otherwise directed.

3.5.20.3 HQUSACE will provide special instructions for selecting and specifying kitchen equipment, medical equipment and government furnished equipment.

3.5.20.4 Provide water softening where required by TM 5-813-3 and MIL-HDBK 1190. Pipe soft water to all sterilizers and other medical equipment requiring cold water, and to entire hot-water system.

3.5.20.5 Size the utility services to all equipment.

3.5.20.6 Do not supply steam from boilers that could be chemically treated to equipment using direct steam such as sterilizers, humidifiers and food service equipment.

3.5.21 Design sewer and water treatment plants and sewer lift stations per criteria provided for each project and per applicable Technical Manual.

3.5.22 Solar Design:

3.5.22.1 Inside and outside design conditions are the same as noted in the paragraphs on Heating above.

3.5.21.2 Weather data is provided by "Input Data for Solar Systems" dated November 1978 and prepared by the Department of Energy and the National Oceanic and Atmospheric Administration, or as otherwise identified by ETL's.

3.5.22.3 Economic analysis is per applicable ETL's. Use generic studies or SOLFEASE whenever possible. For additional information the A-E should request from the COE supervising district a Generic Active Solar Feasibility Study for the Continental United States and computer program users manual for the Economic Analysis Computer Program On Life Cycle Costs In Design by Linda K.Lawrie and Dwight A. Beranek.

3.5.22.4 Design solar per Engineering Manuals, ASHRAE Handbook of Fundamentals, ASHRAE 93-77, ASHRAE 94-77, DOE Facilities Solar Design Handbook, Design of Solar Heating and Cooling Systems (CERL TR-E-139) by Construction Engineering Research Laboratory, special engineering instructions and ETL's.

3.5.22.5 Do not use safety factors in calculations or for sizing equipment.

3.5.22.6 Provide a solar panel efficiency curve based on net square feet of panel on the contract drawing.

3.5.22.7 Freeze Protection/Reduction of Freeze Damage. Design shall limit damage due to freezing temperatures by use of heat tape, antifreeze mixtures, etc.

3.5.23 Energy Monitoring and Control Systems:

3.5.23.1 Design per TI 811-12, guide specifications, cost estimating guidelines, and any special requirements issued by command for Air Force projects.

3.5.23.2 Coordination with the District's EMCS Technical Coordinator is mandatory and must be through the COE technical manager.

3.5.23.3 Coordinate the expansion of an existing EMCS for either single or multiple buildings, with the district and the base EMCS Technical Coordinator prior to Concept/Early Preliminary submittal.

3.5.23.4 Procurement regulations require the connection to a central EMCS/UMCS system to be by a standalone-negotiated contract.

3.5.24 Underground Petroleum Products Storage and Dispensing Systems. Design requirements for these systems are included in Guide Specification CEGS-11140 (Fueling System, Service Station Type) and include double wall tanks and piping, coatings, and cathodic protection, leak detection systems, etc. Other underground petroleum product containers also require the above features. See the plates in the Structural chapter for underground tank foundation/buoyancy requirements.

3.5.25 Ductwork: The Air Supply and Distribution guide specification note for sheet metal ductwork requires the pressure classification, including points of changes in pressure classification, to be noted on the drawings for duct systems (supply & return) per SMACNA. Indicate pressure classification for each 250Pa (1-inch).

4. **ENERGY AND ECONOMIC STUDIES**:

4.1 **Economic Studies**:

4.1.1 The following economic feasibility studies are required for Army and Air Force designs: general design studies, extraordinary energy saving studies, solar studies, and energy conservation investment Program (ECIP) studies.

4.1.2 Basic requirements for general design studies are included within TM 5-802-1 and the USACE TI 800-01. Special

requirements for extraordinary energy saving, solar, and ECIP studies are established by statute or executive order.

4.1.3 Basic criteria and standards requiring Army and Air Force economic studies are contained in regulations entitled "Economic Analysis and Program Evaluation for Resource Management," AR 11-28 and AFR 178-1, respectively.

4.1.4 Supplemental criteria/standards, and guidance are provided in TM 5-802-1, USACE TI 800-01, TI 810-10, MIL HDBK 1190, Air Force general design guidance, applicable Army and Air Force ETLs, and USARC Design Guidance.

4.1.5 Additional guidance providing minimum report requirements is published by the Fort Worth District. This document is available upon request.

4.1.6 Two computer programs developed by the Construction Engineering Research Laboratory (CERL) incorporating current economic methodology are available for purchase and use by anyone performing Government work. Life Cycle Cost in Design (LCCID) and Solar Feasibility (SOLFEAS) can be ordered directly from CERL (phone 1-800-UI-BLAST). Current costs, availability and other information are available at http://www.bso.uiuc.edu/blastmain.htm LCCID describes the input required for a computer economic analysis of any of the studies described above. SOLFEAS describes the input data required for a computer analysis of the performance of a typical active solar assist system and the economic feasibility of the system. The ECOLIF, SOLRLIF, and SIZNCSI Programs are no longer being updated with the current regional fuel escalation rates or prices. If these programs are used, the regional data must be updated. Sources of supply for copies of computer analysis programs may be obtained from the COE technical manager.

4.1.7 In general the economic analysis portions of industry based computer energy analysis programs do not conform to Air Force/Army methodology requirements. Before making an economic analysis using industry programs, proprietary programs, or manual methods, approval of the economic analysis methodology must be obtained from the district.

4.1.8 Fuel Costs: Life cycle cost analyses for specific projects shall include input of current actual energy costs from the particular Air Force Base or Army installation.

4.2 **Energy Studies**:

4.2.1 Requirements for energy studies are per the USACE TI 800-01, MIL-HDBK 1190 respectively for Army and Air Force and per ETLs and general design guidance.

4.2.2 Note that energy studies are related to, but entirely different from, general design economic studies. Energy studies are conducted after the general design studies, require separate and distinct annual energy consumption estimates, and may dictate extraordinary energy saving economic analysis of a different set of alternatives.

4.3 Alternative Systems:

4.3.1 The designer shall submit the following recommendations for approval by the Districts within 10 working days after the predesign conference (or Pre-Project Definition or Project Engineering conference) or after award of the Architect-Engineer contract or design build contract, whichever is earlier:

4.3.1.1 Proposed alternatives for building, equipment, systems, and component items which will be evaluated. Evaluate a minimum of three applicable HVAC alternatives or provide justification of study for fewer systems for approval.

4.3.1.2 A description of the software/methods/systems that will be used to perform the energy studies.

4.3.1.3 The extent to which previous energy studies will be used to satisfy study requirements.

4.4 **General Design Studies, Energy Studies**: Use a technical engineering report format in the presentation of the study. The report shall be a standalone document written for an audience that is unfamiliar with the project plans, specifications and design analysis. The minimum report shall contain:

4.4.1 A discussion of what was studied and why it was studied.

4.4.2 A discussion of calculation methods including, all input data, method of calculation, and output.

4.4.3 A discussion of the results, conclusions derived, and recommendations. Include tabulated results of various alternatives.

4.4.4 Calculations included in an appendix. Document any computer calculations as required by the SWD AEIM for design analysis.

4.4.5 Report format shall generally be as follows:

4.4.5.1 Summary

4.4.5.2 Introduction

4.4.5.3 Conclusions

4.4.5.4 Recommendations

4.4.5.5 Text (Main Body of Report including results)

4.4.5.6 Appendices

4.4.6 A one line scaled building sketch showing HVAC zoning.

4.4.7 A sample (previous) report (if available) may be obtained from the COE Technical Manager for guidance in preparing the study reports.

5. **DESIGN ANALYSIS**:

5.1 **Project Definition (Air Force), Project Engineering (Army), and Concept (Army) submittals** (10 to 35% design) shall contain information as defined by following Chapter IX, Part V. Address general parameters, functional and technical requirements, design objectives and provisions, and economic justification for the systems proposed and/or evaluated. Provide block heating and air-conditioning loads, quantity of plumbing fixtures, adequacy of water, gas and sewer connections, ventilation system capacities, domestic hot water requirements, and characteristics of other systems to enable the reviewer to have a clear understanding of all work.

5.2 **Final Submittal** shall include calculations and be complete and contain information as defined by Chapter IX, Part V. Provide manual block heating and cooling load calculations to confirm the hour by hour computer run. The manual block load calculations can be run on the computer but must be based on the manual method. Provide a narrative in the design analysis giving the percentage difference between the manual block load calculation and the equivalent computer run calculation and justification for the differences.

5.3 **Medical facility design analysis** submittal requirements are per DOD 4270.1M for Army and AFR 88-50 for Air Force.

5.4 **Special Projects** are per specific instructions or as indicated above if special instructions are not furnished.

6. **MECHANICAL CHECKLIST** - Reference Appendix C for a checklist of recurring deficiencies. Mechanical Design/Review checklists should be requested from the district.

APPENDIX A

CHAPTER V

EQUIPMENT SELECTION DATA SHEET
EQUIPMENT SELECTION

CONTRACT SCHEDULE EQUIPMENT NAME AND I.D._____

REQUIRED CAPACITY_____

1. MANUFACTURER/ADDRESS/PERSON CONTACTED/PHONE NUMBER

_____
_____
MODEL NO._____ CAPACITY_____
SIZE L_____W_____H_____ WEIGHT_____
SERVICE CLEARANCE: ITEM_____ L_____W_____H_____
REMARKS_____

2. MANUFACTURER/ADDRESS/PERSON CONTACTED/PHONE NUMBER

_____
_____
MODEL NO._____ CAPACITY_____
SIZE L_____W_____H_____ WEIGHT_____
SERVICE CLEARANCE: ITEM_____ L_____W_____H_____
REMARKS_____

3. MANUFACTURER/ADDRESS/PERSON CONTACTED/PHONE NUMBER

_____
_____
MODEL NO._____ CAPACITY_____
SIZE L_____W_____H_____ WEIGHT_____
SERVICE CLEARANCE: ITEM_____ L_____W_____H_____
REMARKS_____

4. MANUFACTURER/ADDRESS/PERSON CONTACTED/PHONE NUMBER
_____
_____
_____
_____
MODEL NO._____ CAPACITY_____
SIZE L_____W_____H_____ WEIGHT_____
SERVICE CLEARANCE: ITEM_____ L_____W_____H_____
REMARKS_____

APPENDIX B
CHAPTER V

INDEX OF MECHANICAL SCHEDULES/DETAILS

Plate No.	Schedule/Detail
M1	AIR HANDLING UNIT SCHEDULE EVAPORATIVE COOLER SCHEDULE
M2	WARM AIR FURNACE SCHEDULE GAS FIRED MAKE-UP AIR UNIT SCHEDULE
M3	FAN SCHEDULE FAN SOUND POWER LEVELS
M4	PUMP SCHEDULE
M5	HOT WATER BOILER SCHEDULE DUCT HEATER SCHEDULE HOT WATER H & V UNIT SCHEDULE GAS FIRED H &V UNIT SCHEDULE
M6	GAS FIRED WALL HEATER SCHEDULE CONVECTOR SCHEDULE GAS FIRED UNIT HEATER SCHEDULE
M7	PACKAGED AIR COOLED CHILLER SCHEDULE
M8	WATER COOLED CHILLER SCHEDULE
M9	COOLING TOWER SCHEDULE AIR COOLED CONDENSER SCHEDULE AIR COOLED CONDENSING UNIT SCHEDULE
M10	REFRIGERANT COMPRESSOR SCHEDULE
M11	PLUMBING FIXTURE SCHEDULE
M12	AIR COMPRESSOR SYSTEM SCHEDULE
M13	AIR HANDLING UNIT COIL PIPING
M14	HOT WATER UNIT HEATER DETAIL
M15	DOMESTIC WATER HEATER PIPING SCHEMATIC

AIR HANDLING UNIT SCHEDULE				
SYMBOL		AHU-1	MZ-1	
FAN	TOTAL AIR L/s			
	OUTSIDE AIR L/s			
	EXTERNAL S.P. Pa			
COOLING COIL	COIL AIR L/s			
	ENTERING AIR D.B. °C			
	ENTERING AIR W.B. °C			
	SENSIBLE W			
	COIL TOTAL W			
	COIL L/s @ P.D. kPa			
	MAX COIL FACE VEL m/s			
	CHILLED WATER TEMP °C			
HEATING COIL	COIL AIR L/s			
	ENTERING AIR D.B. °C			
	H.W. COIL CAP. W			
	COIL L/s @ P.D. kPa			
FILTER TYPE				
MIN FAN W				
ELECTRICAL				
REMARKS			ZONE - L/s	

AIR HANDLING UNIT SCHEDULE

EVAPORATIVE COOLER SCHEDULE							
SYMBOL	L/s	EXT. S.P. Pa	ELECTRICAL		PUMP		REMARKS
			W	VOLT/PH	L/s	VOLT/PH	
EC-1							

EVAPORATIVE COOLER SCHEDULE

WARM AIR FURNACE SCHEDULE			
SYMBOL		WAF-1	
FAN	TOTAL AIR L/s		
	EXTERNAL S.P. Pa		
	MIN FAN W		
	FAN ELECTRICAL		
DX COILING	COIL AIR L/s		
	ENTERING AIR D.B. °C		
	ENTERING AIR W.B. °C		
	SENSIBLE LOAD W		
	TOTAL LOAD W		
	MIN SEER	SEE SPECIFICATIONS	
	COND UNIT kW		
	COND UNIT ELECTRICAL		
FURNACE	MIN OUTPUT W		
	ENTERING AIR D.B. °C		
	MIN A.F.U.E.		
	FUEL TYPE		
FILTER TYPE			
REMARKS			

WARM AIR FURNACE SCHEDULE

GAS FIRED MAKE-UP AIR UNIT SCHEDULE							
SYMBOL	OUTPUT W	FUEL	TOTAL L/s	ST. PRES. Pa	ELECTRICAL		REMARKS
					W	VOLT/PH	
UHGM-1							

GAS FIRED MAKE-UP AIR UNIT SCHEDULE

FAN SCHEDULE								
SYMBOL	Air Flow L/s	TYPE	MAX O.V. m/s	EXT. S.P. Pa	DRIVE	ELECTRICAL		REMARKS
						W	VOLT/PH	
EF-1								

FAN SCHEDULE

FAN SOUND POWER LEVELS (db RE 10^{-12} WATT)									
SYMBOL	DESCRIPTION	FAN OCTAVE BAND CENTER FREQUENCY Hz							
		63	125	250	500	1000	2000	4000	8000

FAN SOUND POWER LEVELS

PUMP SCHEDULE						
SYMBOL	SERVICE	FLOW L/s	HEAD kPa	ELECTRICAL		REMARKS
				W	VOLT/PH	

BCP - BOILER WATER CIRCULATING PUMP
CP - CONDENSER WATER PUMP
CHP - CHILLED/HOT WATER PUMP
CWP - CHILLED WATER PUMP
DCP - DOMESTIC HOT WATER CIRCULATING PUMP
HWP - HEATING WATER PUMP
DOM - DOMESTIC COLD WATER PUMP

PUMP SCHEDULE

HOT WATER BOILER SCHEDULE					
SYMBOL	GROSS OUTPUT W	OPERATING TEMP °C	OPERATING PRES. kPa	FUEL	REMARKS
B-1					

HOT WATER BOILER SCHEDULE

DUCT HEATER SCHEDULE						
SYMBOL	CAPACITY W	TOTAL AIR L/s	ENT. AIR D.B. °C	ENT. WTR TEMP °C	COIL L/s @ P.D. kPa	REMARKS
DH-1						

DUCT HEATER SCHEDULE

HOT WATER HEATING & VENTILATING UNIT SCHEDULE									
SYMBOL	CAPACITY W	COIL L/S @ P.D. kPa	TOTAL AIR L/s	OUTSIDE AIR L/s		EXT. S.P. Pa	ELECTRICAL		REMARKS
				MIN	MAX		W	VOLT/PH	
HVW-1									

HOT WATER HEATING & VENTILATING UNIT SCHEDULE

GAS FIRED HEATING & VENTILATING UNIT SCHEDULE									
SYMBOL	INPUT W	FUEL	TOTAL L/s	OUTSIDE AIR L/s		EXT. S.P. Pa	ELECTRICAL		REMARKS
				MIN	MAX		W	VOLT/PH	
HVG-1									

GAS FIRED HEATING & VENTILATING UNIT SCHEDULE

GAS FIRED WALL HEATER SCHEDULE					
SYMBOL	INPUT W	AIR FLOW L/s	ELECTRICAL		REMARKS
			W	VOLT/PH	
GFWH-1					

GAS FIRED WALL HEATER SCHEDULE

CONVECTOR SCHEDULE						
SYMBOL	TYPE	CAPACITY W	FLOW L/s	ENT. AIR TEMP °C	ENT. WTR TEMP °C	REMARKS
CONV-1						

CONVECTOR SCHEDULE

GAS FIRED UNIT HEATER SCHEDULE					
SYMBOL	INPUT W	AIR FLOW L/s	ELECTRICAL		REMARKS
			W	VOLT/PH	
GFUH-1					

GAS FIRED UNIT HEATER SCHEDULE

PACKAGED AIR COOLED CHILLER SCHEDULE		
SYMBOL	PACCH-1	
CAPACITY kW		
CHW FLOW L/s		
WATER TEMP OUT °C		
MAX EVAP P.D. kPa		
EVAP FOULING FACTOR	0.00025	
AMBIENT TEMP °C		
COND FAN W		
MIN. COP		
MIN. IPLV		
ELECTRICAL		
REMARKS		

PACKAGED AIR COOLED CHILLER SCHEDULE

WATER COOLED CHILLER SCHEDULE		
SYMBOL	WCCH-1	
CAPACITY kW		
CHW FLOW L/s		
EVAP LWT °C		
MAX EVAP P.D. kPa		
EVAP FOULING FACTOR	0.00025	
CONDENSING TEMP °C		
COND WATER FLOW L/s		
COND EWT °C		
MAX COND P. C. kPa		
COND FOULING FACTOR		
MIN. COP		
MIN. IPLV		
ELECTRICAL		
REMARKS		

WATER COOLED CHILLER SCHEDULE

COOLING TOWER SCHEDULE							
SYMBOL	AMBIENT W.B. °C	WATER TEMP °C		COND. WTR L/s	ELECTRICAL		REMARKS
		IN	OUT		W	VOLT/PH	
CT-1							

COOLING TOWER SCHEDULE

AIR COOLED CONDENSER SCHEDULE							
SYMBOL	NET REFRIG. EFFECT W	TEMPERATURE °C			ELECTRICAL		REMARKS
		SUCTION	AMBIENT	CONDENSING	W	VOLT/PH	
ACC-1							

AIR COOLED CONDENSER SCHEDULE

AIR COOLED CONDENSING UNIT SCHEDULE						
SYMBOL	NET REFRIG. EFFECT W	AMB. AIR TEMP °C	SAT. SUC TEMP °C	ELECTRICAL		REMARKS
				KW	VOLT/PH	
ACCU-1						

AIR COOLED CONDENSING UNIT SCHEDULE

REFRIGERANT COMPRESSOR SCHEDULE		
SYMBOL	RC-1	
CAPACITY W		
SUCTION TEMP °C		
CONDENSING TEMP °C		
ELECTRICAL		
CAPACITY REDUCTION		
REMARKS		

REFRIGERANT COMPRESSOR SCHEDULE

PLUMBING FIXTURE SCHEDULE (Sizes in mm)						
SYMBOL	DESCRIPTION	COLD WATER	HOT WATER	VENT	WASTE	REMARKS (SEE SPECS FOR SUPPORTS)
P-1	WATER CLOSET	25	-	50	100	
P-2	WATER CLOSET HANDICAPPED	25	-	50	100	
P-3	URINAL	20	-	32	50	
P-5	LAVATORY	15	15	32	32	
P-6	LAVATORY WHEELCHAIR	15	15	32	32	
P-8	SERVICE SINK	15	15	40	80	
P-13	SHOWER	15	15	-	50	
P-15	ELECTRIC WATER COOLER	15	-	32	32	0.008 L/s STD. ARI RATING TYPE PB-A-W

PLUMBING FIXTURE SCHEDULE

AIR COMPRESSOR SYSTEM SCHEDULE			
	AC-1		
TYPE			
NUMBER OF STAGES			
RATED AIR DELIVERY:			
-FLOW (L/s) AT			
-OPERATING PRESS (kPa)			
MAX. OPERATING PRESSURE (kPa)			
SAFETY VALVE SETTING (kPa)			
INLET CONDITIONS:			
-TEMPERATURE (°C)			
-PRESSURE (KPa)			
WATT			
ELECTRICAL (VOLTS/PHASE)			
AFTER COOLER TYPE			
RECEIVING TANK:	RT-1		
-CAPACITY (L)			
-NOMINAL SIZE (DIA. HEIGHT IN mm)			
WORKING PRESSURE			
DRYING UNIT:	DU-1		
-TYPE			
-ELECTRICAL (VOLTS/PHASE)			
NOTES:			

AIR COMPRESSOR SYSTEM SCHEDULE

DESIGN NOTES:

1. THIS SCHEDULE IS FOR SEPERATE AIR COMPRESSOR AND RECEIVING TANK. REMOVE THE SYMBOL RT-1 AND THE ENTRY FOR THE TANK NOMINAL SIZE IF A TANK MOUNTED COMPRESSOR IS USED.
2. DETAIL A VALVED SCHRADER CONNECTION FOR PERIODIC HOOKUP TO A NITROGEN BOTTLE FOR LINE PURGING/DRYING ON CONTROL AIR SYSTEMS.
3. COMPRESSOR INLET CONDITIONS SHALL REFLECT ALTITUDE AND PRESSURE LOSS OF ANY INLET PIPING OR FILTERS.
4. IF OTHER THAN AIR TYPE AFTER COOLER IS REQUIRED, INDICATE TYPE AND NOTE SOURCE OF COOLANT AND FLOW RATE.
5. NUMBER OF STAGES ON A RECIPICATING COMPRESSOR DIRECTLY AFFECTS HORSE POWER.
6. IF DUPLEX COMPRESSORS ARE REQUIRED, COORDINATE WITH SPECS. AND INDICATE IN NOTES (IE PROVIDE DUPLEX UNIT WITH EACH COMPRESSOR CAPABLE OF DELIVERING THE FLOW INDICATED.

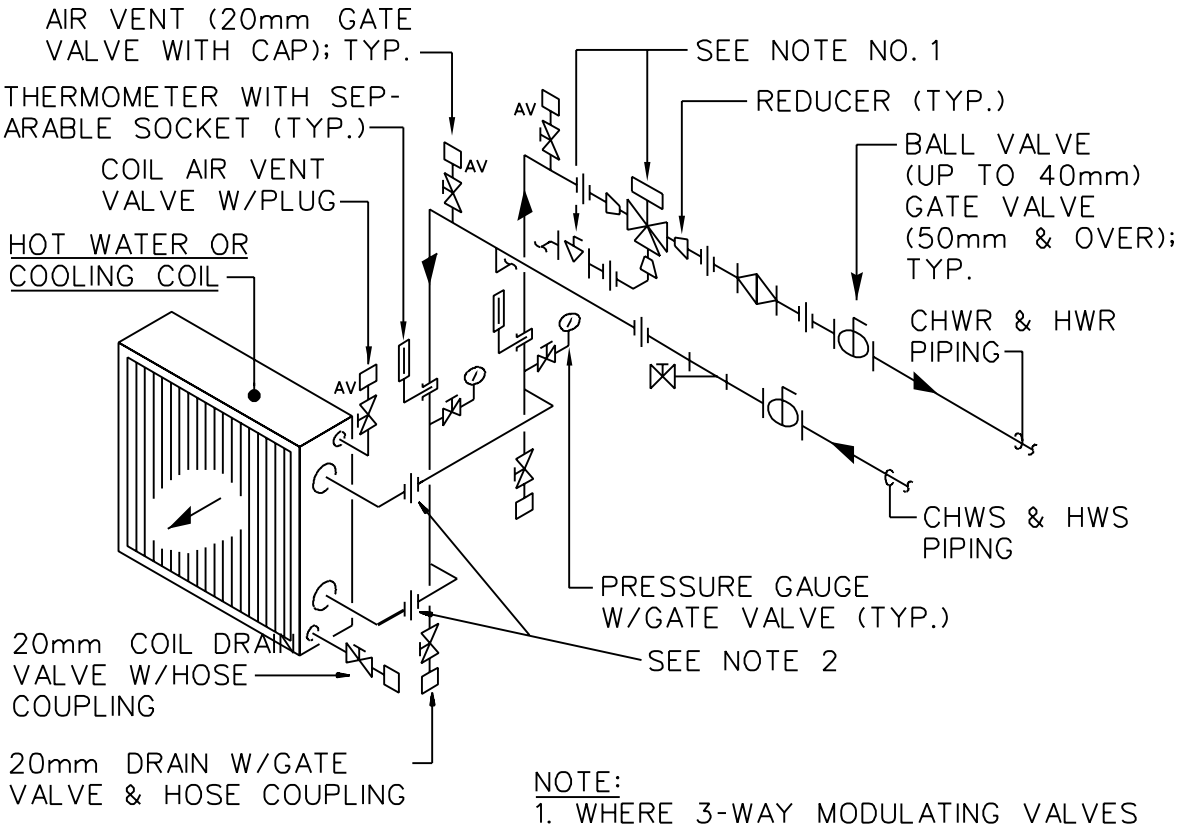

NOTE:

1. WHERE 3-WAY MODULATING VALVES ARE REQUIRED, PROVIDE ADDITIONAL PIPING & ACCESSORIES AS SHOWN.
2. OFF SET UNION CONNECTIONS TO ALLOW COIL REMOVAL.

AIR HANDLING UNIT COIL PIPING SINGLE COIL CONNECTION

NOT TO SCALE

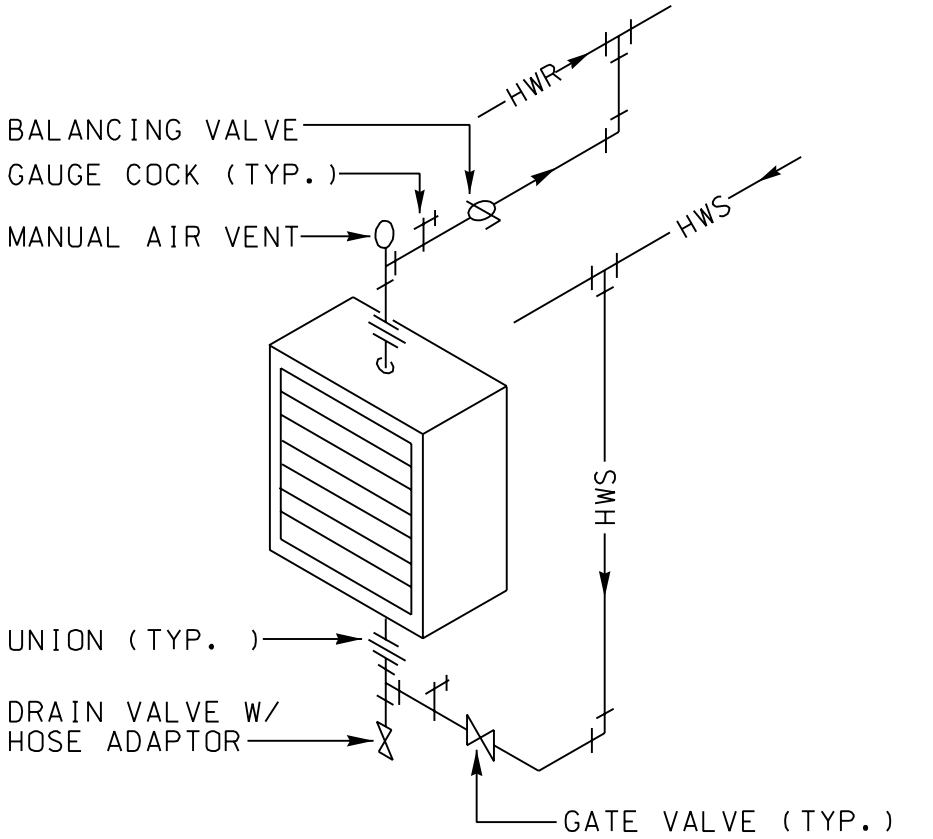

HOT WATER UNIT HEATER DETAIL

NOT TO SCALE

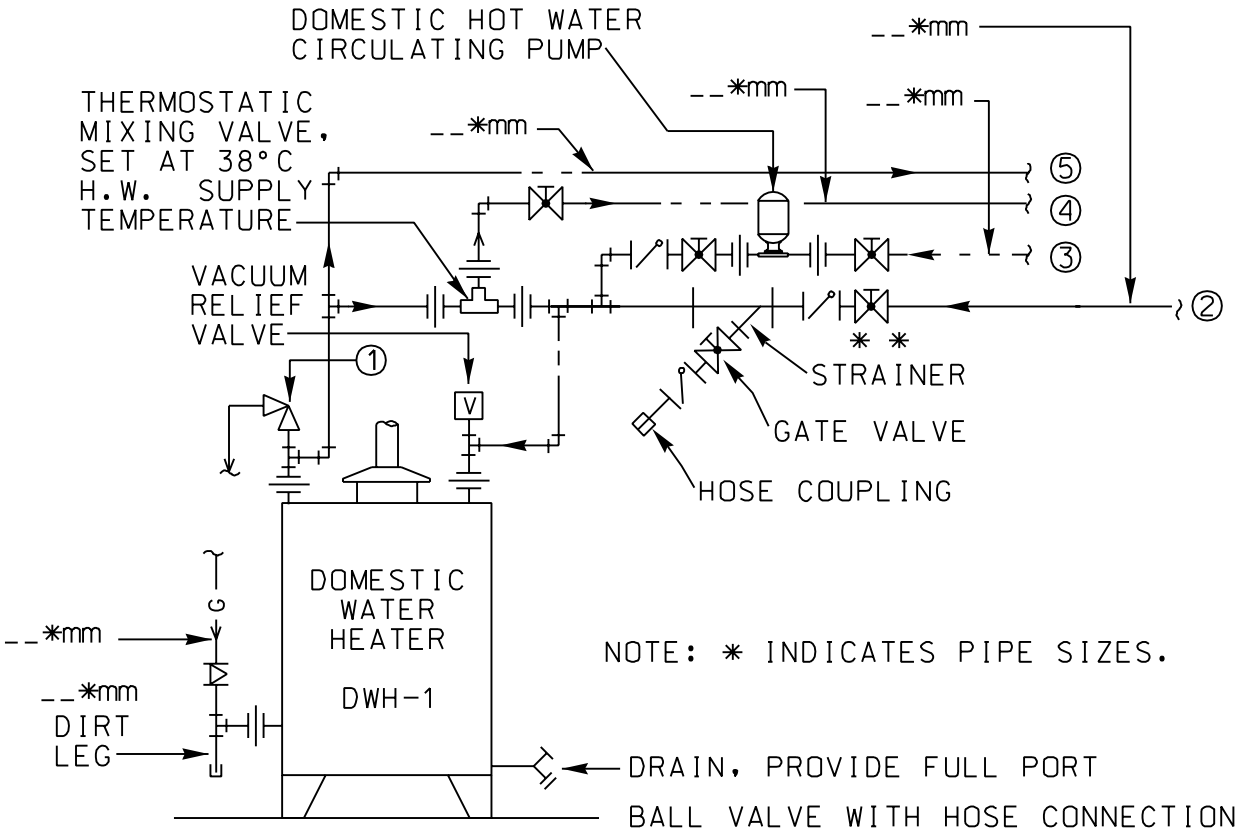

DOMESTIC WATER HEATER PIPING SCHEMATIC

NOT TO SCALE

KEYED NOTES:

① TEMP. AND PRESSURE RELIEF VALVE W/FULL SIZE DISCHARGE ROUTE TO FLOOR DRAIN.

② COLD WATER SUPPLY

③ HOT WATER RETURN

④ 38°C HOT WATER

⑤ 45°C HOT WATER TO KITCHEN SINK

* * NOTE TO DESIGNER
PROVIDE EXPANSION TANK IF
CHECK VALVE IS USED

APPENDIX C

CHAPTER V

RECURRING DEFICIENCY CHECKLIST

1. Must include piping, ductwork, and exhaust fan calculations in Design Analysis.

2. Must ventilation electrical closets in hospitals.

3. Use electrical resistance heating only where allowed by criteria.

4. The narrative portion of design analysis must be complete (design solution, system descriptions, etc., included).

5. Must identify drinking water coolers as to size or type.

6. Roof walkways must be provided for equipment.

7. Must provide fixed combustion louvers for equipment rooms.

8. Fire damper locations shown and any details coordinated with specifications.

9. Must show fire protection (sprinkler hazard) requirements.

10. Where Steam Humidifiers are used, together with steam-to-steam generators specifications must be provided.

11. Include information on drawings to allow contractor to provide optional hydraulic design of fire protection system, where contractor design is allowed by the installation.

12. Identify all existing equipment on rehabs and all government furnished equipment.

13. Must include seismic design when calculating "U" factor and equipment support.

14. Do not discharge a showerhead toward the shower door (opening).

15. Check location of mechanical equipment, ductwork, grilles, registers, etc., for interference with electrical, structural, and architectural features.

16. Coordinate equipment schedules between plans, design analysis, and, where needed, with specifications.

17. Show cleanouts on drawings in accessible locations and designate as floor or wall cleanout.

18. Plumbing waste, vents, and water piping locations shall agree on all plans and be coordinated with architectural and structural. Particularly check for water closets over beams.

19. Provide wall hydrants around the outside of the building. Locate per criteria.

20. In areas where expansive soil conditions exist, comply with expansive soil criteria.

21. Piping to equipment requiring coil or tube pulling shall be arranged to permit maintenance. Ensure adequate mechanical room clearances.

22. Assure proper routing of water lines and ductwork around electrical equipment such as panels, transformers, etc.

23. Verify adequate maintenance access and maintenance space for equipment.

24. Comply with the SWD criteria letter (V 1-186) on noise.

25. Provide complete mechanical legends to identify all piping, HVAC equipment, fixtures, etc.

APPENDIX D

CHAPTER V

EVAPORATIVE COOLING SYSTEM DESIGN CRITERIA

1. Evaporative Cooling. Use the following data as a basis for calculations:

a. Temperature Differential.

(1) Assume an efficiency of 80% (per specification requirement) for single stage cooler except in case of special air washers. Use multistage coolers when economically justified. Use special air washers of 90% efficiency when economically justified.

(2) Allowable Temperature Rise.

(a) For Air Force Installations: Allowable temperature rise is based on criteria in AFR 88-15.

(b) For Army use 27^0C (80^0F) as the target for the room leaving air temperature except that the temperature rise is to be not less than 4^0C (7^0F) where outdoor design wet bulb is 21^0C (70^0F) or less; but 3^0C (6^0F) rise may be employed on locations where the wet bulb is over 21^0C (70^0F).

(c) Outside design: 2 1/2% wet bulb column.

b. Controls. Provide control systems consistent with technical and functional requirements in combination with energy conservation policies.

2. Equipment.

a. Provide winterizing dampers on the discharge of each evaporative cooler.

b. Provide bleed-off provisions for the circulating water.

3. Design Analysis. The design analysis shall include evaporative cooling calculations. The submittal shall clearly show the design outside and inside dry bulb, wet bulb, and percentage relative humidity, and walls, glass, ceiling, occupants and lighting sensible heat gains for the space to be cooled. Calculations may be performed manually or with a computer program.

CHAPTER VI

ELECTRICAL

Table of Contents

1. GENERAL
- 1.1 Criteria
- 1.2 References: Industry Codes and Standards
- 1.3 References: Government Criteria
- 1.4 Metrication
  - 1.4.1 Conduit
  - 1.4.2 Wire Size
  - 1.4.3 Light Fixtures
  - 1.4.3.1 Suspended Ceiling Systems
  - 1.4.3.2 Recessed Lighting Fixtures Specifications
  - 1.4.4 Metric Illumination
  - 1.4.5 Fiber Optics
  - 1.4.6 Exterior Aerial Distribution
- 1.5 Architectural Coordination
- 1.6 Economics
- 1.7 Design Analysis
  - 1.7.1 Project Definitions and Concept Submittals
  - 1.7.2 Final and Corrected Submittals
  - 1.7.3 Requirements for Medical Facility Design
  - 1.7.4 Equipment
- 1.8 Drawings and Specifications

2. INTERIOR ELECTRICAL
- 2.1 References
- 2.2 Lighting Design Guide
  - 2.2.1 Standard Lighting Fixtures
  - 2.2.2 Lighting Fixture Details
  - 2.2.3 Emergency and Exit Lighting
- 2.3 Air Force Grounding Requirements
- 2.4 Transient Voltage Surge Suppression (TVSS)
- 2.5 Nonlinear Loads
- 2.6 Voltage Dip Analysis
- 2.7 Dedicated Space for Panelboards
- 2.8 Standard Equipment Sizes
- 2.9 Panelboard Schedules
- 2.10 Description of Safety Switches
- 2.11 Wire Sizes Larger Than No. 12
- 2.12 Copper Conductors

Table of Contents (cont.)

2.13 Conductor Temperatures
2.14 Panelboard Feeder Circuits
2.15 Panelboard Feeder Demand Factor
2.16 Short Circuit Calculations
2.17 Ground Fault Protection
2.18 Voltage Drop
2.19 Riser Diagrams
2.20 Fire Alarm Systems
2.21 Telephone Systems
2.22 Lightning and Static Electricity Protection

3. EXTERIOR ELECTRICAL
3.1 References
3.2 Exterior Electrical Plans
3.3 Power Pole Clearances
3.4 Short Circuit Computations
3.5 Hot Line Work
3.6 High Voltage Substation Grounding
3.7 Surge Arresters
3.8 Open-Type Fusible Cutouts
3.9 Transformer Clearances
3.10 Transformer Loading
3.11 Concrete-Encased Duct for Primary
3.12 Reinforced Concrete-Encased Duct
3.13 Duct Profiles
3.14 Use of Grounding Conductor
3.15 Line Poles
3.16 Standard Details
3.17 Coordination of Primary Devices
3.18 Strength Calculations
3.19 Fence Grounding
3.20 Coordination of Fence Locations and Heights

4. SEISMIC REQUIREMENTS

5. ENERGY CONSERVATION

6. CORROSION CONTROL
6.1 General
6.1.1 Cathodic Protection Required
6.1.2 Cathodic Protection not Required

Table of Contents (cont.)

6.2 Design
6.2.1 Calculations
6.2.2 Existing Cathodic Protection
6.2.3 Insulation
6.2.4 Design Guidance
6.2.5 Typical Cathodic Protection

7. ENGINE-GENERATORS
7.1 Guide Specifications
7.2 Fuel and Load Banks for Testing
7.3 Automatic Transfer Switches
7.4 Engine Generator Set Pad

8. AIRFIELD LIGHTING
8.1 Guide Specifications
8.2 Air Force Criteria
8.3 Army Criteria
8.4 Revision or Improvement to Existing System

9. UTILITY MONITORING AND CONTROL SYSTEMS
9.1 TI 5-811-12
9.2 Design Coordination

10. OTHER SPECIALIZED CONSTRUCTION
10.1 Army Ordinance Plant
10.2 POL Areas, Hangers, Tactical Equipment Shops, etc.

11. DESIGN DEFICIENCIES

12. COMPUTER PRINTOUTS

Appendix A Plates E1 thru E33

Appendix B Design Review Checklist

CHAPTER VI

ELECTRICAL

1. **GENERAL**:

1.1 **Criteria**. All electrical work shall be designed in accordance with: the Architect-Engineer's (A-E) contract; all applicable technical manuals (TM for Army and AFM for Air Force); engineer technical letters (ETL); Corps of Engineers guide specifications (CEGS); and these instructions. For Army construction, TI 800-01 "Design Criteria" is the basic criterion. For Air Force construction, Air Force Manuals (AFM), Regulations (AFR), and Military Handbooks (MIL-HDBK) are the basic criteria. Any conflict between criteria should be reported. Applicable codes, standards, etc., that are not specifically for military design, and that are listed in specifications are required criteria and shall be complied with except where military criteria conflict with the codes, etc. In this case, military criteria will govern. All official USACE engineering regulations, circulars, manuals, and other documents are available form "**Publications of the Headquarters, United States Army Corps of Engineers**" internet site @ http://www.usace.army.mil/inet/usace-docs. Design criteria is also available from Huntsville Engineering and Support Center – "**Techinfo**" internet site @ http://www.hnd.usace.army.mil/techinfo/index.htm.

1.2 **References: Industry Codes and Standards**

1.2.1 American National Standards Institute (ANSI)

1.2.2 American Society for Testing and Materials (ASTM)

1.2.3 American Wood-Preservers' Association (AWPA)

1.2.4 Corps of Engineers Guide Specifications (CEGS)

1.2.5 Institute of Electrical and Electronic Engineers (IEEE)

1.2.6 Insulated Cable Engineering Association (ICEA)

1.2.7 National Electrical Manufacturers Association (NEMA)

1.2.8 National Fire Protection Association (NFPA)

1.2.8.1 NFPA 70, National Electrical Code, 1999.

1.2.8.2 NFPA 101, Life Safety Code, 1997.

1.2.9 Rural Utilities Services (RUS)

1.2.10 Underwriters Laboratories (UL)

1.3 **References: Government Criteria**

1.3.1 Army Regulations

1.3.1.2 AR 385-64, U.S. Army Explosives Safety Program, 1 Feb 2000.

1.3.2 Department of Army Pamphlets

1.3.2.1 DA PAM 385-64, Ammunition and Explosive Safety Standards.

1.3.3 Military Handbooks (MIL-HDBK)

1.3.3.1 MIL-HDBK-1008 C, Fire Protection for Facilities Engineering, Design, and Construction, 10 Jun 1997.

1.3.3.2 MIL-HDBK-1012/3 (1), Telecommunications Premises Distribution Planning, Design, and Estimating, 30 Nov 1996.

1.3.4 Technical Instructions (TI)

1.3.4.1 TI 800-01, Design Guide, Corps of Engineers, Feb 1997.

1.3.4.2 TI 809-04, Seismic Design for Buildings, 31 Dec 1998.

1.3.4.3 TI 811-16, or EI 16E500, Lighting Design, 20 Feb 1997

1.3.5 Training Manuals

1.3.5.1 TM 5-811-1, Electric Power Supply and Distribution, 28 Feb 1995.

1.3.5.2 TM 5-811-2, Electrical Design, Interior Electrical System (Encl C1). 1 Sep 1983.

1.3.5.3 TM 5-811-3, Electrical Design: Lighting and Static Electricity Protection, 29 Mar 1985.

1.3.5.4 TM 5-811-5, Army Aviation Lighting, 13 Dec 1991.

1.3.5.5 TM 5-811-6, Electric Power Plant Supply, 20 Jan 1984.

1.3.5.6 TM 5-811-7, Electrical Design, Cathodic Protection, 22 Apr 1985.

1.3.6 Engineering Technical Letters (ETL)

1.3.6.1 TL 1110-3-386, Line Sectionalized Switches, 26 Feb 1988

1.3.6.2 TL 1110-3-394, Aircraft Characteristics for Airfield-Heliport Design and Evaluation, 27 Sep 1991.

1.3.6.3 TL 1110-3-403, Electrical Power Systems for Nonlinear Loads, 30 Jun. 1989.

1.3.6.4 TL 1110-3-412, Transformer Application Guidance, 20 Oct 1989.

1.3.6.5 TL 1110-3-430, Design of US Army Airfield Aircraft Mooring and Grounding Points for Rotary Wing Aircraft, 23 Sep 1991.

1.3.6.6 TL 1110-3-432, Exit Signs, 25 Nov 1991.

1.3.6.7 TL 1110-3-441, Electronic Ballasts for Fluorescent Lighting Fixtures, 20 Aug 1992.

1.3.6.8 TL 1110-3-474, Cathodic Protection, 14 Jul 1995.

1.3.6.9 TL 1110-3-484, Aircraft Hangar Fire Protection Systems, 26 Sep 1997.

1.3.6.10 TL 1110-3-485, Fire Protection for Helicopter Hangars, 15 Oct 1997.

1.3.6.11 TL 1110-3-502, Telephone and Network Distribution System Design and Implementation Guide, 1 Mar 2000.

1.3.6.12 TL 1110-9-1 (FR), Sulfur Hexafluoride (SF6) Gas Breakers and Switches, 30 Jul 1990.

1.3.6.13 TL 1110-9-10 (FR), Cathodic Protection System Using Ceramic Anodes, 5 Jan 1991.

1.3.7 Southwest Division (SWD) Criteria Letters

1.4 **Metrication**. The metric units used are the International System of Units (SI) adopted by the U.S. Government as described in Chapter I, paragraphs 3 and 4.2.1.

1.4.1 Conduit will not change by switching to metric. It becomes classified by the nominal mm size. Plate E17 gives guidance on substitution of I-P “Pipe/Conduit” to nominal metric mm sizes.

1.4.2 Wire Size will use Awg until availability of ASTM B628, standard metric conductor sizes, is determined.

1.4.3 Light Fixtures. Due to the limited availability of hard metric Recessed Lighting Fixtures (RLF), HQUSACE hard metric or inch-pound substitute (soft metric) RLF in our metric projects so that they can make the selection based on the total installed price. Specifying RLF in metric projects, construction documents for bids or proposals must ensure that the following steps are taken.

1.4.3.1 Suspended Ceiling Systems should be laid out on a 100 mm module using modular metric RLF dimensions. Suspended ceiling system components are T-bars, wall moldings, hangers, acoustical ceiling tile, recessed air diffusers, grills and registers, and RLF. Contractors should be allowed to use either hard metric or inch-pound products for all components of the suspended ceiling system. Location and details of access panels and other penetrations through ceiling that are critical for the project should be identified as required by CEGS 09510, titled Acoustical Ceilings. In addition, the specific design criteria and the assumptions for lighting should be noted on the drawings to enable the contractor to lay out inch-pound suspended ceiling system. As always, selection

of ceiling systems and components will be based on engineering and life cycle cost considerations.

1.4.3.2 Recessed Lighting Specifications, should be edited to include both the hard metric and inch-pound values. Also, a note to the contractors should be added to advise them of their choice of either metric or inch-pound products, and the choice of substituting all suspended ceiling components.

1.4.4 Metric Illumination levels are measured in lux (lx). Provide design lighting calculations in (lx). One Foot-Candle (FC) is equal to 10.76 lx.

1.4.5 Fiber Optics. Most cables are made to metric dimensions, so these will be specified in hard metric.

1.4.6 Exterior Aerial Distribution. Materials used in Aerial Distribution, poles, crossarms and hardware associated with aerial pole distribution are unavailable in hard metric sizes. Drawing dimensions should be consistent with specification CEGS 16370, Electrical Distribution System, Aerial and all equipment should be specified as soft metric.

1.5 **Architectural Coordination**. Comply with Chapter III - "ARCHITECTURAL," paragraph l6 - "Electrical Requirements." When criteria require provisions for the physically handicapped, follow guidance contained in Chapter III, paragraph 1.4 - "Special Instructions."

1.6 **Economics**. All designs shall be the most economical that are consistent with criteria.

1.7 **Design Analysis**.

1.7.1 Project Definitions (Air Force)and Project Engineering and Concept Submittals (Army) shall contain information as defined by Chapter XI - "DESIGN SUBMISSION REQUIREMENTS," Chapter IX - "DESIGN ANALYSIS," Part 2, Chapter 6 - "Electrical," and SWD Criteria Letter XV 1-83, with the following exception for calculations. The only calculations required are an estimate of the total connected load and resulting demand load by applying demand and diversity factors for the loads involved. Data provided

shall enable the reviewing authority to get a clear picture and understanding of all work so that approval will be specific.

1.7.2 Final and Corrected Final Submittals. The design analysis, including calculations, shall be complete and contain information as defined by Chapter XI - "DESIGN SUBMISSION REQUIREMENTS," Chapter IX - "DESIGN ANALYSIS," Part 2, Chapter 6 - "Electrical," and SWD Criteria Letter XV 1-83.

1.7.3 Requirements for Medical Facility Design Submittals are defined by TM 5-838-2, DOD 4270.1-M, and MIL-HDBK-1191 for Army and MIL-HDBK-1191 for Air Force.

1.7.4 Major items of equipment shall be described with sufficient clarity to permit a definite selection from catalog data for estimating purposes.

1.8 **Drawings and Specifications**.

1.8.1 Drawings and specifications shall be coordinated by the designer with the drawings and specifications of the other disciplines to eliminate conflicts and omissions.

1.8.2 Guide specifications shall be reviewed by the designer before proceeding with the design to reduce discrepancies between project specifications and drawings. The designer shall pay special attention to the general and technical notes in each guide specification. For any item shown on the drawings, and not described in the guide specifications, add a performance specification to the project specifications.

1.8.3 Designer shall specify by manufacturer's trade name, model, or type only when absolutely necessary. Reference Chapter VII - "SPECIFICATIONS" for guidance.

1.8.4 See Appendix A, Plate E4 and Plate E16 for typical symbols legend. List may be tailored and appended as applicable for individual projects.

2. **INTERIOR ELECTRICAL**:

2.1 **TM 5-811-2/AFM 88-9, Chapter 2** - "Electrical Design,

Interior Electrical System" is general design criteria that is usually supplemented by engineering instructions for the specific job and the using agency's approved general criteria.

2.2 **Lighting Design Guide (Corps of Engineers "Engineering Instructions (EI) 16E500"),** is to be used as a design tool for lighting layouts.

2.2.1 **Standard Lighting Fixtures**, shall be used to the maximum practicable extent. A Lighting Fixture Schedule shall be provided on the drawings. Corps of Engineers Standard "Lighting Fixture Details" (formally known as Standard Drawing 40-06-04) are available from Huntsville Engineering and Support Center "Techinfo" - internet site @ http://www.hnd.usace.army.mil/techinfo/index.htm.

2.2.2 **Lighting Fixture Details,** For each luminaire shown on the lighting fixture schedule, provide a detail on the drawings and provide a description on the drawings or in the specifications, which is similar to the descriptions contained on the Corps of Engineers Standard "Lighting Fixture Details." The description shall allow at least three manufacturers to be able to supply fixtures. Alternatively, each such luminaire may be specified by description and manufacturer's reference. At least three such similar and "equal" fixtures must be available and listed on the drawings. All lighting fixtures shall comply with the 1992 National Energy Policy Act. Fluorescent fixtures shall use high efficiency magnetic or electronic ballast.

2.2.3 **Emergency and exit lighting** shall be provided as required by NFPA 101 for the particular type of occupancy described. If correlation between military and NFPA 101 occupancy is questionable, guidance will be requested. Where an emergency generator is provided by other criteria, the lighting shall be connected to the generator and battery power source will not be provided unless required by other criteria. The requirements of Article 700-12 of the National Electrical Code shall not be considered met solely by a connection ahead of the main disconnect. Calculations shall also be furnished to support emergency and exit lighting design.

2.3 **For Air Force projects only**, convenience receptacles and other grounding type outlets and their branch panel feeders shall have a separate green wire provided as a grounding conductor. Show and note on plans. Connect to service entrance ground. Fixtures with wall mounted battery packs shall not be used. Fixtures with remote battery packs are permitted. Internally illuminated signs (e.g. exit signs) shall be low maintenance, low energy lighting (incandescent lighting is not permitted).

2.4 **Transient Voltage Surge Suppression (TVSS).** Requirements for TVSS will be based on an economic analysis of installed equipment and if mission critical equipment is used in the facility subjected to damage by surges.

2.4.1 In some locations, power spikes from lightning surges, utility switching operations or other sources may require the use of surge protection at the facility service.

2.4.2 Surges can also emanate form sources within the facility. In new facilities, these sources may be part of the original construction contract or user equipment installed after facility turnover. The designer must coordinate with the User to identify these sources and then provide a design that protects the rest of the distribution system from these sources.

2.5 **Nonlinear Loads**. The increasing presence of solid state switching mode power supply components in electrical equipment (Personal Computers, Electronic and High Efficiency Lighting ballast, variable speed motors), requires the designer to consider the equipment to be supplied by the distribution system and to make provisions for nonlinear loads. These loads generate harmonics which can overload conventionally-sized conductors or equipment causing safety hazards and premature failures. Typical design approaches include separation of different load types, over sizing of neutral conductors and buses, and the use of isolation or k-rated transformers or line filters. Instrumentation and protective devices employed on circuits carrying nonlinear loads must employ true RMS sensing.

2.6 **All projects shall have an estimated voltage dip analysis performed**. A more formal calculation or analysis shall be provided if the largest motor locked rotor current

equals or exceeds the full load rating of the transformer or supply conductors, or if rough analysis indicates a voltage dip greater than 5%. The calculations shall be made for both primary and any backup source(s) of power supply such as emergency generator(s).

2.7 **A dedicated space (drawn to scale) for panelboards and switchboards** located in mechanical or other equipment rooms shall be provided. The space shall be dimensioned on the drawings. The National Electrical Code shall not be used as the basis for providing a separate electrical room. Minimum dimensions of dedicated space shall be as required by working space requirements of the National Electrical Code except space is to extend from floor to structural ceiling. Note on the drawings that no piping, ducts, or other equipment foreign to electrical equipment shall be permitted in the space (SWDED-TM criteria letter, VI 2-65).

2.8 **Space should be available for at least three different manufacturers' standard sizes of equipment**. Clearances required for maintenance and equipment access shall be indicated by dashed lines drawn to scale on the plans. Coordinate with mechanical, architectural, and structural disciplines regarding placement of items. The design analysis shall state the brand name and catalog number for the three different manufacturers' equipment. This is required for engine-generator sets and their controls, motor-generator sets and their controls, unit substations, main switchgear, main panelboards rated above 600 amperes, motor control centers, switches and circuit breakers mounted separately from panelboards and rated above 6OO amperes, automatic transfer switches, and dry-type transformers rated above 25 KVA.

2.9 **Drawings shall use panel schedules** similar to Plate E2 and Plate E3, Appendix A. Circuit loads shall be shown only in volt-amperes, not watts or amperes. Load summary data and interrupting ratings of circuit breakers shall be shown.

2.10 **Show description (voltage, poles, amps) of all safety switches** and NEMA enclosure rating suitable for the environment where located. Fuse sizes and U.L. classes shall be shown when required for fusible switches.

2.11 **Any wire size larger than No. 12 AWG** shall be shown on the drawings along with the number of conductors when more than two. Conduit size shall also be shown when larger than 15mm (½ inch).

2.12 **Design shall be based on copper conductors**. The aluminum conductor option given in the guide specifications shall be allowed for the sizes permitted. Aluminum option for interior wiring system(s) shall not apply to medical facilities or certain other facilities as stated in project criteria.

2.13 **Unless conductor location is within a totally air conditioned space** the following ambient temperatures shall be used for equipment derating and conductor ampacity calculations: main mechanical equipment rooms, 50°C; outdoors (in sun), 45°C, all other locations, 40°C. These values shall also be used to determine the location of equipment whose maximum temperature rating may be exceeded by any of these temperatures.

2.14 **For panelboard feeder circuits**, apply a demand factor for load and voltage drop calculations. (Exception: when a transformer supplies one panelboard and is adjacent to it, use the transformer rating for the panelboard feeder).

2.15 **For service entrance and service drop load and voltage drop calculations**, retain the demand factors used for feeder calculations and also apply an appropriate diversity factor.

2.16 **Available short circuit current** shall be calculated for all projects having services over 100 KVA at 480 volts or 50 KA at 208 volts. Equipment suitable for available short circuit current shall be shown and described on drawings. If accurate data is not available, assume infinite bus on the primary. Also consider motor contribution to fault current. The overcurrent devices for the Life Safety Branch, Critical Branch, and Equipment System in medical facilities shall be coordinated.

2.17 **Where ground fault protection** is required on building service, the plans and specifications shall describe the requirements and provide the setting to be used. If separate from equipment, it shall be labeled. The

requirement for ground fault protection shall be indicated on the plans.

2.18 **Demand load voltage drop** shall be a maximum of 5%. It is usually apportioned 1% to service entrance and service drop, 1% to panel feeders, and 3% to branch circuits. These percentages can be varied so long as the 5% total is not exceeded.

2.19 **A riser diagram** shall be included for each system such as power, fire alarm, telephone, television, etc. A one-line diagram should also be provided for systems or special connections requiring additional detail or clarification (e.g., special grounding schemes, primary switching, manhole connections, etc.).

2.20 **For fire alarm systems,** a battery back-up power source will be provided. Where an emergency generator is provided by other criteria, the fire alarm system is to be connected to the emergency generator. Connection to an emergency generator will not eliminate the requirement for battery backup.

2.21 **Telephone requirements** will be as provided by the communications officer at each installation. The COE Technical Manager will provide coordination with HQ USAISEC-CONUS and/or local DOIM for Army projects and the appropriate major command for Air Force projects.

2.22 **Lightning And Static Electricity Protection**. Lightning and static electricity protection will be provided in accordance with TM 5-811-3 and AFM 88-9, Electrical Design, Lightning and Static Electricity Protection. Lightning protection will be utilized where lightning damage to buildings and structures would cause large economic loss or would prevent activities essential to the Department of Defense or others. Lightning protection for Army Ordinance plant construction shall comply with Army Regulation AR 385-64, "U.S. Army Explosives Safety Program." In some cases, the facility to be constructed does not require lightning protection per the above criteria. The NFPA 780, Lightning Protection Code provides a method (guide) for risk assessment in Appendix I. The designer is not responsible for determining the economic losses to the user facility based on a lightning strike. Using this guide the designer

should advise the project manager if the risk value is Moderate to Severe. In this situation the users are responsible for determining the critical nature of the facility and the need for lightning protection.

3. **EXTERIOR ELECTRICAL**:

3.1 **TM 5-811-1/AFJMAN 32-1080,** "Electrical Power Supply and Distribution" is basic design criteria. Guide Specification CEGS-l6375 covers underground distribution and Guide Specification CEGS-l6370 covers aerial distribution.

3.2 **All exterior electrical features shall be identified and sized on exterior plans**.

3.3 **Details of power poles shall be shown on drawings**. They shall include clearance between circuits, circuits and equipment, and circuits and ground.

3.4 **Short circuit computations on distribution systems** are not required unless specifically directed in instructions.

3.5 **Hot line work is not normally permitted**. Any phasing of construction shall be noted on plans or submitted with plans. Any outages required shall give location of work, brief description of work, and estimated outage time. The district will have to obtain using agency approval and allow for outages in estimated construction time.

3.6 **High voltage substation grounding** shall be designed in accordance with IEEE STD. 80-1986.

3.7 **Where primary changes from aerial to underground** and pad-mounted transformers are used, provide surge arresters.

3.8 **Open-type fusible cutouts** shall be used on all 4-wire "wye" distribution systems of 7200/12470 volts and above. Voltage rating shall be suitable for system phase-to-phase voltage.

3.9 **Liquid-insulated transformers** shall be installed in accordance with, and at distances required by, MIL-HDBK-1008. Additionally, transformers shall be located at the minimum radial distances shown below from any structural openings or combustible surfaces:

Item	Distance (meter)
Non-combustible surfaces.....	1.6m
Combustible surfaces.....	3.7m
Windows, doors not used as required fire exits, louvers, and other openings.....	3.7m
Doors and other openings used as required fire exits.....	7.7m

3.10 **Liquid-insulated transformers** shall not be loaded more than 120% of rating.

3.11 **Concrete-encased duct** is required for all underground primary cables except short lengths of rigid steel conduit may be used for risers to poles and slabs of pad-mounted transformers. Warning tape shall be provided for all underground cables and conduit.

3.12 **Reinforced concrete-encased ducts** are required under railroad tracks only.

3.13 **Profiles of invert elevations of ducts** shall be shown so that drainage will be toward manholes, and to insure that there is no conflict with existing underground utilities. Short extensions from riser poles will not require profiles.

3.14 **Where specifications allow nonmetallic conduit** for secondary conductors, the grounding conductor shall be sized and shown on the plans.

3.15 **Line poles** shall be a minimum class 4 and transformer poles a minimum of class 3.

3.16 **Details for transformer pads**, street and parking light pole bases, manholes and handholes details provided shall be used where applicable. They shall be modified when necessary to meet design requirements, such as increased wheel loads.

3.17 **When automatic circuit reclosers or relay-controlled** primary power circuit breakers are installed, the settings shall be coordinated and given in the contract.

3.18 **Strength calculations for guys and pole foundations** are required. Special strength calculations for poles, crossarms, conductors, etc., should be furnished when unusual conditions occur. Examples would be extensions or connections to aerial lines with extremely large conductors, extraordinary span length requirements, extra pole height for special clearances, etc. Calculations shall be based upon ANSI C2 and ARMY TM 5-811-1/AFJMAN 32-1080.

3.19 **Fences**, including those around electrical equipment, crossed by overhead power lines in excess of 600 volts shall be grounded in accordance with TM 5-811-3 and Guide Specification CEGS-02831 (Fence, Chain-Link).

3.20 **The electrical designer** shall coordinate with the site designer on fence locations and heights around electrical installations.

4. **SEISMIC REQUIREMENTS:** Electrical equipment located in a seismic Category C or D (See Structural Chapter IV, paragraph 23.1) shall be designed to resist lateral forces induced by earthquakes complying with TI 809-04, CEGS 13089 and 16070. Note that CEGS 16070 covers both interior and exterior electrical equipment.

5. **ENERGY CONSERVATION**: Proposals or techniques to conserve energy consumption shall be included in the design analysis. Presentation of information shall be as required by Chapter IX - "DESIGN ANALYSIS."

6. **CORROSION CONTROL**:

6.1 **General**.

6.1.1 Cathodic protection shall be provided as required by regulations. This criteria applies to any buried/submerged, ferrous metallic materials, regardless of soil or water resistivity, which are used in the construction of the following systems:

6.1.1.1 natural gas lines

6.1.1.2 water distribution and service lines

6.1.1.3 fire protection distribution and service lines

6.1.1.4 forced sanitary sewer mains and service lines

6.1.1.5 fuel lines

6.1.1.6 steam lines

6.1.1.7 chilled water lines

6.1.1.8 insulated and/or jacketed lines

6.1.1.9 all other buried metallic pressure piping

6.1.1.10 elevated water storage tanks

6.1.1.11 underground storage tanks

6.1.2 Cathodic protection is not required for some systems under certain conditions and/or values of resistivity. See design guidance listed in subsequent paragraphs for additional information.

6.2 **Design**.

6.2.1 Calculations shall be provided for sizing system components. Locations of anodes, test stations, rectifiers, etc. shall be shown on the plans.

6.2.2 When an existing cathodic protection system will be disturbed by new construction, proper protection for existing and new shall be provided in the construction contract.

6.2.3 Insulation and/or jackets on metallic materials shall not be a substitute for cathodic protection.

6.2.4 For design guidance, use TM 5-811-7, AFM 88-45, Air Force ETL 88-5, and Corps of Engineers guide specifications.

6.2.5 See Appendix A for typical cathodic protection system details. Details should be used where applicable and modified, if necessary, to meet project specific requirements.

7. **ENGINE-GENERATORS**:

7.1 **Guide Specification** CEGS-16264 shall be used for engine-generators rated 15-300 KW. Guide Specification CEGS-16263 shall be used for engine-generators 100-2500 KW.

7.2 **Fuel and load banks** for field test are to be furnished by the construction contractor. Testing with load banks shall be done at rated power factor.

7.3 **Automatic transfer switches** are to be specified by Guide Specification CEGS-16262.

7.4 **Engine Generator Set Pad** is detailed on Plate S23, Appendix A of Chapter IV, Structural.

8. **AIRFIELD LIGHTING**:

8.1 **Guide specifications** CEGS-16525 and CEGS-16526 shall be used for airfield lighting and navigation aids equipment.

8.2 **AFM 32-1076**, "Visual Air Navigation Systems," covers Air Force projects.

8.3 **TM 5-8ll-5**, "Army Aviation Lighting" See “TECHINFO” @ http://www.hnd.usace.army.mil/techinfo/index.htm and Standard Lighting Detail (Drawing No. 40-06-05), "Army Aviation Lighting Fixtures," design criteria for Army projects.

8.4 **When revision or improvement to an existing system** is required and instructions are not sufficiently detailed, the district should be contacted for further guidance.

9. **UTILITY MONITORING AND CONTROL SYSTEMS (UMCS)**. UMCS shall be designed in accordance with the following criteria and additional criteria furnished during the project development or definition phase. Any conflict between criteria should be reported.

9.1 **TI 811-12,** "Utility Monitoring and Control Systems” (UMCS). This manual provides design guidance for new UMCS, upgrade of existing Energy Monitoring and Control Systems (EMCS) to UMCS, and expansion of existing EMCS. This manual

includes guidance for both direct digital control and supervisory control implementations of UMCS and EMCS.

9.2 **The electrical designer** shall coordinate with the mechanical designer during UMCS or EMCS expansion design and layout and editing of guide specifications.

10. **OTHER SPECIALIZED CONSTRUCTION**:

10.1 **Army Ordinance Plant construction** shall be in accordance with army regulation AR 385-64, U.S. Army Explosives Safety Program and DA PAM 385-64, Ammunition and Explosive Safety Standards.

10.2 **For POL areas, hangars, tactical equipment shops, vehicle maintenance facilities, rocket storage, etc.**, construction shall have their respective hazardous areas defined in accordance with the National Electrical Code, and also in accordance with design instructions for specific projects.

11. **DESIGN DEFICIENCIES**. The designer should review the "Design Review Checklist" in Appendix B for applicability to avoid design deficiencies.

12. **COMPUTER PRINTOUTS**. Printouts may be substituted for Plate E1, Lighting Calculations, that are intended to be placed in the Design Analysis. Printouts shall include all data and information required by the standard forms and must be clearly identified. Additional guidance on the use of computer programs is contained in Chapter IX - "DESIGN ANALYSIS."

APPENDIX A

Plates

Plate	Index
E1	Lighting Calculations
	Panel Schedules
E2	Single Phase Panel Computation
E3	Three Phase Panel Computation
	Exterior Electrical Details
E4	Exterior Legend
E5	Exterior Materials List (Aerial Distribution)
E5A	Exterior Materials List (Continued)
E6	Butt Wrapped Ground
E7	Ground Rod
E8	Down Guy For 27KN - 44KN (6 Kip to 10 Kip)
E9	Span Guy For 27KN - 44KN (6Kip to 10 Kip)
E10	Street Light & Pole Base
E11	Transformer Pad
E12	Concrete Encased Duct
E13	Manhole
E14	Handhole
E15	Communication Manhole
	Interior Electrical Details
E16	Interior Legend
E17	Conduit (Metric to English Conversion Table)
	Cathodic Protection Details
E18	Vertical Anode Installation
E19	Horizontal Anode Installation (Rock bottom)
E20	Horizontal Anode Installation (Backfill)
E21	Test Station - Above Ground (Galv Pipe)
E22	Test Station - Above Ground (Wood Post)
E23	Test Station - Flush Mounted
E24	Test Stations Connections
E25	Cased Roadway Crossing
E26	Test Station Wiring I
E27	Test Station Wiring II

Plates

Plate	Index
	Cathodic Protection Details (cont.)
E28	Not Used
E29	Not Used
E30	Not Used
E31	Backfill Shield
E32	Insulated Flanged Joint
E33	Insulated Pipe Couplings

LIGHTING CALCULATIONS

PROJECT: _____ DATE: _____

LOCATION: _____ BY: _____

Room Name											
Room Number											
Room Size mm											
Room Area mm^2											
Ceiling Height mm											
Fixture Height mm											
Room Cavity Ratio											
Ceiling Reflection %											
Wall Reflection %											
Coeff. of Utilization											
Maintenance Factor											
Fixture Type (see Schedule)											
Watts/Fixture											
Total Lumens Req'd (Lx)											
Lumens/Fixture (Lx)											
Fixtures Req'd/Provided											
Lux Provided											
Lux Req'd											

Notes:

PANEL COMPUTATION

CIRCUIT BREAKER INTERRUPTING RATING_____ AMPS.

PANEL _____ VOLTS_____ 1 PHASE WIRES ____ MCB MLO _____ A.

CKT. NO.	TRIP AMPS	NO. POLES	LOAD SERVED	PHASE LOAD V.A. A	PHASE LOAD V.A. B	LOAD SERVED	CKT. NO.	TRIP AMPS	NO. POLES
1							2		
3							4		
5							6		
7							8		
9							10		
11							12		
13							14		
15							16		
17							18		
19							20		
21							22		
23							24		
25							26		
27							28		
29							30		
31							32		
33							34		
35							36		
37							38		
39							40		
41							42		
			TOTAL		------				

TOTAL CONNECTED LOAD_____ KVA

ESTIMATED DEMAND LOAD_____ KVA

DEMAND LINE AMPS_____

PLATE E2

PANEL COMPUTATION

CIRCUIT BREAKER INTERRUPTING RATING_____ AMPS.

PANEL _____ VOLTS_____ 3 PHASE WIRES ____ MCB MLO _____ Amps.

CKT. NO.	TRIP AMPS	NO. POLES	LOAD SERVED	PHASE LOAD V.A. A	B	C	LOAD SERVED	CKT. NO.	TRIP AMPS	NO. POLES
1								2		
3								4		
5								6		
7								8		
9								10		
11								12		
13								14		
15								16		
17								18		
19								20		
21								22		
23								24		
25								26		
27								28		
29								30		
31								32		
33								34		
35								36		
37								38		
39								40		
41								42		
			TOTAL							

TOTAL CONNECTED LOAD_____ KVA

ESTIMATED DEMAND LOAD_____ KVA

DEMAND LINE AMPS _____

PLATE E3

ELECTRICAL EXTERIOR LEGEND

SYMBOL			DESCRIPTION
NEW	EXISTING TO REMAIN	EXISTING TO BE REMOVED	
—E—	—E_X—	—×— E_X —×—	AERIAL PRIMARY. 7620/13200 VOLTS, 3ϕ.
	—$E1_X$—		AERIAL PRIMARY. 7620 VOLT, 1ϕ.
	‖— E_X—	—×—×E_X—×—×	AERIAL SECONDARY. NO. OF CROSS LINES INDICATE NO. OF CONDUCTORS. NO. CROSS LINES INDICATES TWO CONDUCTORS.
	—N_X—		NEUTRAL SUPPORTED AERIAL SECONDARY.
	‖—SL_X—		AERIAL STREETLIGHT CIRCUIT. CROSS LINES SAME AS ABOVE.
	‖—T_X—		AERIAL TELEPHONE CABLE. CROSS LINES SAME AS ABOVE.
—E^{UG}—	—E_X^{UG}—	—×— E_X^{UG} —×—	UNDERGROUND PRIMARY. 7620/13200 VOLTS, 3ϕ
—$E1^{UG}$—	—$E1_X^{UG}$—		UNDERGROUND PRIMARY. 7620 VOLTS, 1ϕ
	—E_X^{UG}—		UNDERGROUND SECONDARY.
	—E_X—		EXIST. AERIAL PRIMARY LINE TO BE CONVERTED TO VERT. CONFIG.
—SG^{6M}—	—SG_X—	—×— SG_X —×—	SPANGUY WITH QUANTITY & STRENGTH INDICATED.
—|6M	—→	—×—×→	DOWNGUY WITH STRENGTH INDICATED.
●	○	⊗	POLE
◒		◒	EXISTING POLE TO BE REPLACED WITH NEW POLE.
	△50		POLE MOUNTED TRANSFORMER. NO. INDICATES KVA RATING.
	☼—		STREETLIGHT LUMINAIRE AND BRACKET.
	—T_X^{UG}—		UNDERGROUND TELEPHONE.
—╳—		—╳— X	POLE TOP SWITCH. NORMALLY CLOSED.
—/ /		—/ / X	POLE TOP SWITCH. NORMALLY OPEN.
■E	□E		MANHOLE. "E" INDICATES ELECTRICAL. "C" INDICATES COMMO.
A●—■	☼—□		STREETLIGHT OR PARKING AREA LIGHT POLE. NO. OF LUMINAIRES AS SHOWN. "A" INDICATES TYPE IN SCHEDULE.
	◄	R◄	FLOODLIGHT
1 A / 13.7 3			POLE IDENTIFICATION SYMBOL. "1" INDICATES POLE NO. "A" INDICATES POLE DETAIL REFERENCE. "13.7" INDICATES POLE HEIGHT IN METERS. "3" INDICATES POLE CLASS. 13.7 METERS CORRESPONDS TO 45 FEET.
⬡			KEYED NOTE REFERENCE.
	⊥ 300 KVAR		CAPACITOR BANK WITH KVAR RATING INDICATED.
▲IX	△225		PAD MOUNT TRANSFORMER - 3ϕ. NO. INDICATES KVA RATING. ROMAN NUMERAL INDICATES TYPE IN SCHEDULE.
[1]	[1]	[1]	LINETYPE IDENTIFICATION. NO. INDICATES TYPE IN SCHEDULE.
D●—			FLOODLIGHT POLE. LETTER INDICATES TYPE IN LUMINAIRE SCHEDULE.
[S]			PAD MOUNTED PRIMARY SWITCH.
◪			PULLBOX.
		⟐F	FIRE ALARM STATION PULLBOX
		⟐R	CATHODIC PROTECTION RECTIFIER.
②			CONCRETE ENCASED DUCT BANK W/ NO. OF DUCTS INDICATED. DUCTS TO BE 129 mm UNLESS OTHERWISE INDICATED.

MATERIAL LIST

ITEM	DESCRIPTION *
A	CROSSARM, 89mm X 114mm X 2.4m (3-1/2" X 4-1/2" X 8'-0")
B	CROSSARM BRACE, ANGLE
C	CROSSARM PIN, STEEL
D	PIN INSULATOR, TOP TIE
E	MACHINE BOLT, 15.9mm (5/8 ") X REQUIRED LENGTH, WITH NUT.
F	WASHER, 57.2mm X 57.2mm X 4.8mm (2-1/4" X 2-1/4" X 3/16"), WITH 17.5mm (11/16") HOLE.
G	CARRIAGE BOLT, 9.5mm X 130mm (3/8" X 5")
H	
I	DOUBLE ARMING BOLT
J	SUSPENSION INSULATOR
K	SECONDARY RACK
L	SURGE ARRESTER, 3KV., 9KV., 10KV.
M	PRIMARY FUSE CUTOUT 15KV
N	SECONDARY SPOOL CLEVIS AND INSULATOR
O	STRAIN PLATE
P	GUY HOOK
Q	GUY CLAMP
R	STRAIN INSULATOR
S	GUY STRAND
T	GUY WIRE GUARD, 1.994 mm (14 GAUGE) STEEL
U	ANCHOR ROD, 19mm X 2.4m (3/4 " X 8'-0") MINIMUM DIMENSIONS
V	ANCHOR
W	GROUND WIRE
X	GROUND WIRE MOULDING, SCHEDULE 80 SUNLIGHT RESISTANT PVC
Y	GROUND ROD
Z	FIBERGLASS CROSSARM, .9m (36"), 75mm (3") DIA., SOLID.

* NOTE: POUND-INCH MEASURE ARE IN PARENTHESES.

MATERIAL LIST

ITEM	DESCRIPTION *
AA	DEADEND CLAMP
BB	TRANSFORMER BRACKET AND INSULATOR
CC	DEADEND ASSEMBLY WITH 89mm X 140mm X 2.4m (3-1/2" X 5-1/2" X 8'-0") CROSSARM HUGHES CATALOG NUMBER 2890B OR EQUAL
DD	CONDUIT WEATHERHEAD
EE	CONDUIT
FF	SOLDERLESS CONNECTOR
GG	HOTLINE CLAMP
HH	STIRRUP
II	
JJ	POLE TOP PIN, 500mm (20")
KK	MACHINE BOLT, 12.7mm (1/2 ") X REQUIRED LENGTH
LL	WASHER, 50.8mm X 50.8mm X 3.2mm WITH 15mm HOLE (2" X 2" X 1/8" WITH 9/16" HOLE)
MM	CABLE TERMINATOR
NN	STRAIGHT LINE STRAIN CLAMP
OO	EYEBOLT, 16mm (5/8") X REQUIRED LENGTH
PP	EYENUT, 16mm (5/8")
QQ	PIPESTRAP
RR	WOOD CROSSARM BRACE, 49.2mm X 74.6mm X REUIRED LENGTH (1-15/16" X 2-15/16" X REQUIRED LENGTH)
SS	WASHER, ROUND, 35mm (1-3/8") DIAMETER X 3.2mm (1/8") WITH 15mm (9/16") HOLE
TT	ANGLE CLAMP
UU	SERVICE CABLE DEADEND, CLEVIS TYPE
VV	POLE BAND, ADJUSTABLE
WW	GROUNDING BUSHING
XX	CONNECTING LINK
YY	STRAIN INSULATOR, 2m (78") FIBERGLASS, CLEVIS AND ROLLER FITTINGS
ZZ	EQUIPMENT SUPPORT BRACKET, STEEL

* NOTE: POUND-INCH MEASURE ARE IN PARENTHESES.

MATERIAL LIST

ITEM	DESCRIPTION
A	CROSSARM, 3-1/2" X 4-1/2" X 8'-0"
B	CROSSARM BRACE, ANGLE
C	CROSSARM PIN, STEEL
D	PIN INSULATOR, TOP TIE
E	MACHINE BOLT, 5/8" X REQUIRED LENGTH, WITH NUT.
F	WASHER, 2-1/4" X 2-1/4" X 3/16", WITH 11/16" HOLE.
G	CARRIAGE BOLT, 3/8" X 5"
H	
I	DOUBLE ARMING BOLT
J	SUSPENSION INSULATOR
K	SECONDARY RACK
L	SURGE ARRESTER, 3KV., 9KV., 10KV.
M	PRIMARY FUSE CUTOUT
N	SECONDARY SPOOL CLEVIS AND INSULATOR
O	STRAIN PLATE
P	GUY HOOK
Q	GUY CLAMP
R	STRAIN INSULATOR
S	GUY STRAND
T	GUY WIRE GUARD, 14 GAUGE STEEL
U	ANCHOR ROD, 3/4" X 8'-0" MINIMUM DIMENSIONS
V	ANCHOR
W	GROUND WIRE
X	GROUND WIRE MOULDING, 1-1/4"
Y	GROUND ROD
Z	
AA	DEADEND CLAMP
BB	TRANSFORMER BRACKET AND INSULATOR
CC	DEADEND ASSEMBLY WITH 87.5 X 137.5 X 2400 (3-1/2" X 5-1/2" X 8'-0") CROSSARM HUGHES CATALOG NUMBER 2890B OR EQUAL
DD	CONDUIT WEATHERHEAD
EE	CONDUIT
FF	SOLDERLESS CONNECTOR
GG	HOTLINE CLAMP
HH	STIRRUP
II	
JJ	POLE TOP PIN, 20"
KK	MACHINE BOLT, 1/2" X REQUIRED LENGTH
LL	WASHER, 2" X 2" X 1/8" WITH 9/16" HOLE
MM	CABLE TERMINATOR
NN	STRAIGHT LINE STRAIN CLAMP
OO	EYEBOLT, 5/8" X REQUIRED LENGTH
PP	EYENUT, 5/8"
QQ	PIPESTRAP
RR	WOOD CROSSARM BRACE, 1-15/16" X 2-15/16" X REQUIRED LENGTH
SS	WASHER, ROUND, 1-3/8" DIAMETER X 7/64" WITH 9/16" HOLE
TT	ANGLE CLAMP
UU	SERVICE CABLE DEADEND, CLEVIS TYPE
VV	POLE BAND, ADJUSTABLE
WW	GROUNDING BUSHING
XX	CONNECTING LINK
YY	STRAIN INSULATOR, 78" FIBERGLASS, CLEVIS AND ROLLER FITTINGS
ZZ	EQUIPMENT SUPPORT BRACKET, STEEL

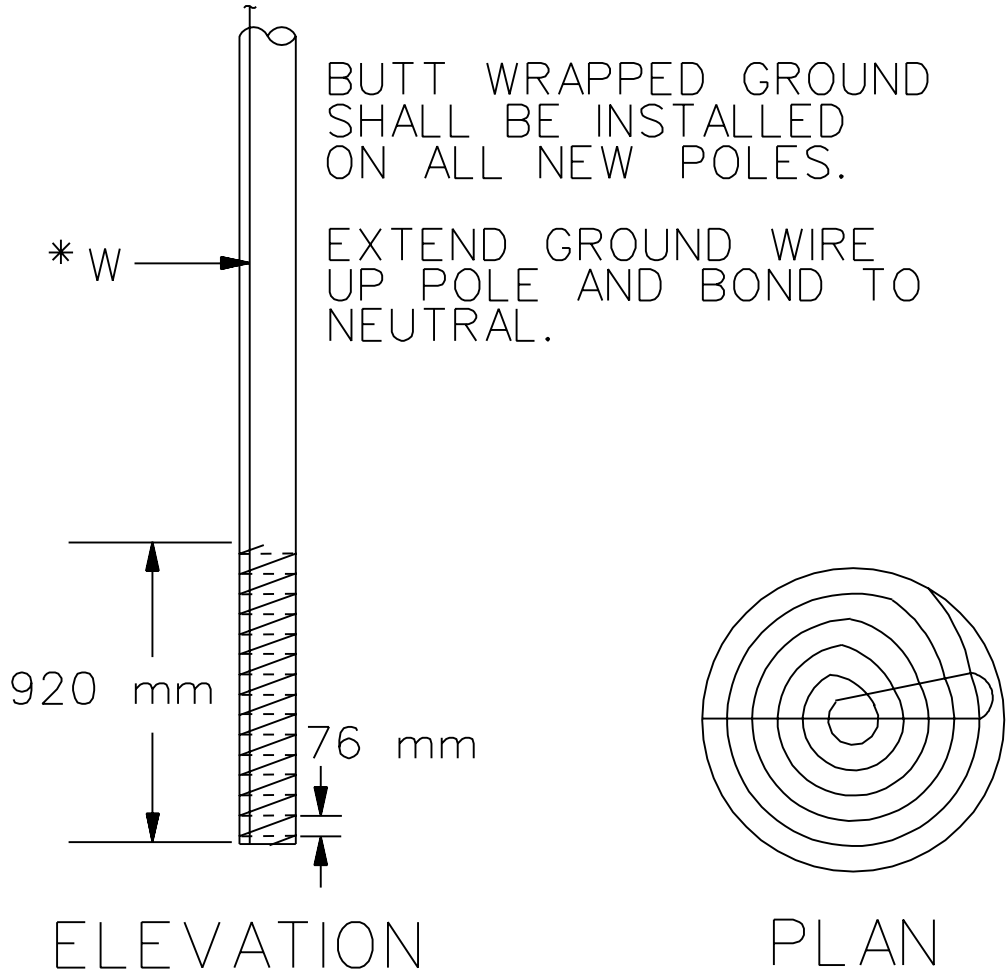

BUTT WRAPPED GROUND

N.T.S.

* NOTE: MATERIALS INDICATED ARE REFERENCED TO PLATE E5.

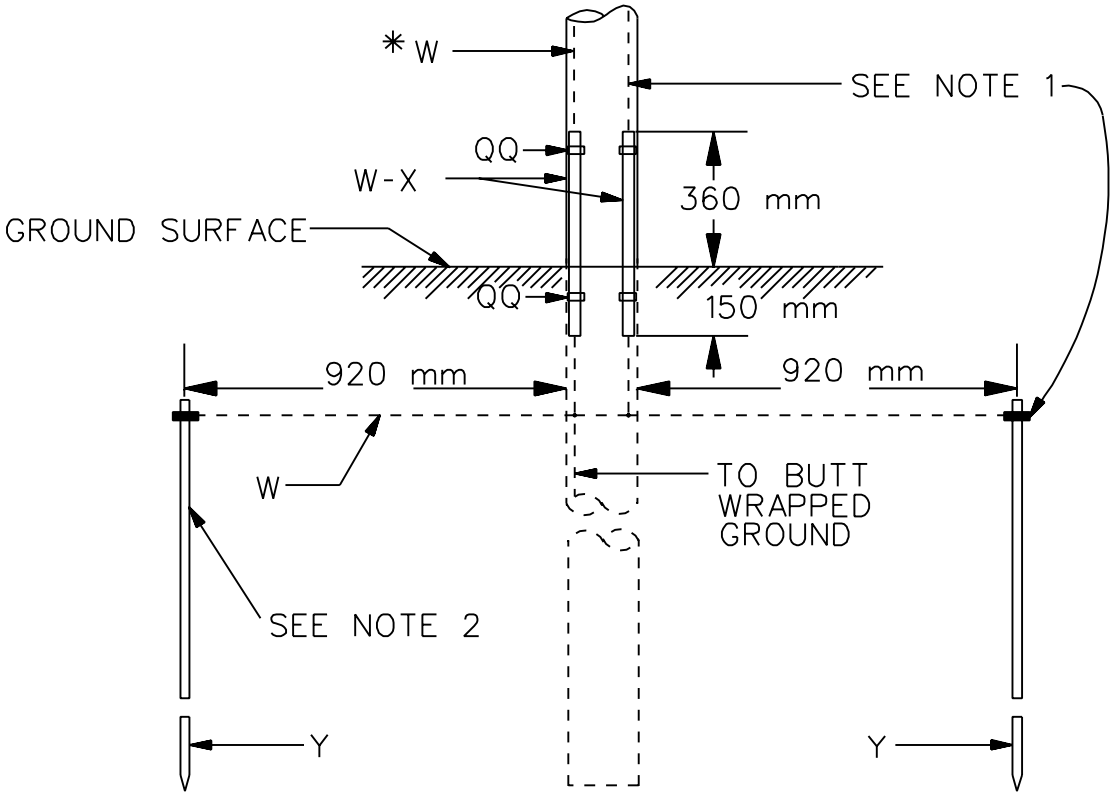

GROUND ROD DETAIL

N.T.S.

NOTES :

1: INSTALL ADDITIONAL GROUND ROD AND GROUND WIRE WHERE SECONDARY GROUND IS INDICATED ON POLE DETAIL.

2: INSTALL GROUND ROD FOR THE FOLLOWING POLES:

PROVIDE GROUND ROD FOR SURGE ARRESTOR INSTALLATIONS OR WHEN REQUIRED BY NESC

* NOTE: MATERIALS INDICATED ARE REFERENCED TO PLATE E5.

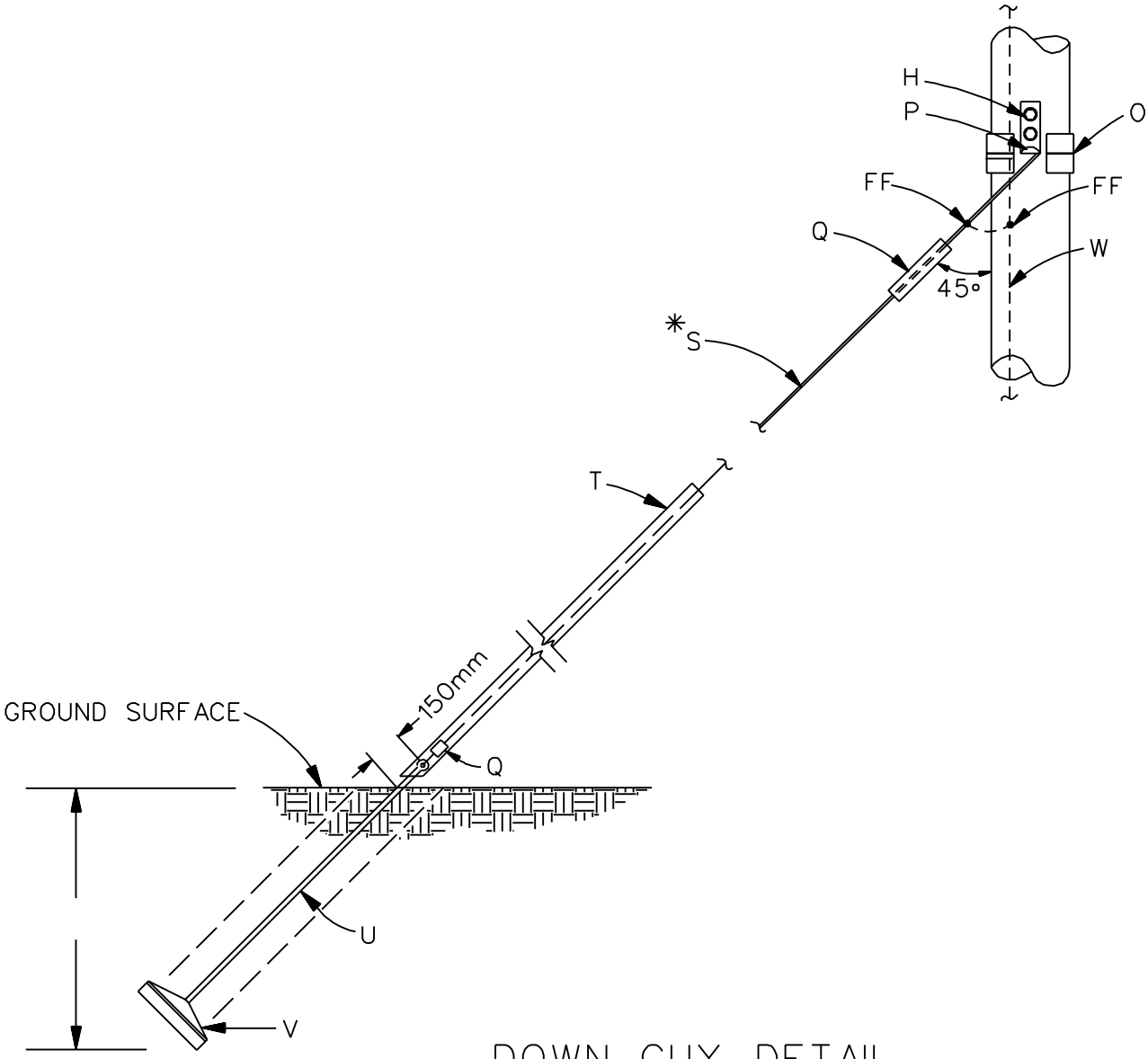

DOWN GUY DETAIL

N.T.S.

FOR 27KN-44KN GUYS

(6,000 - 10,000 Pounds)

* NOTE: MATERIALS INDICATED ARE REFERENCED TO PLATES E5 AND E5A.

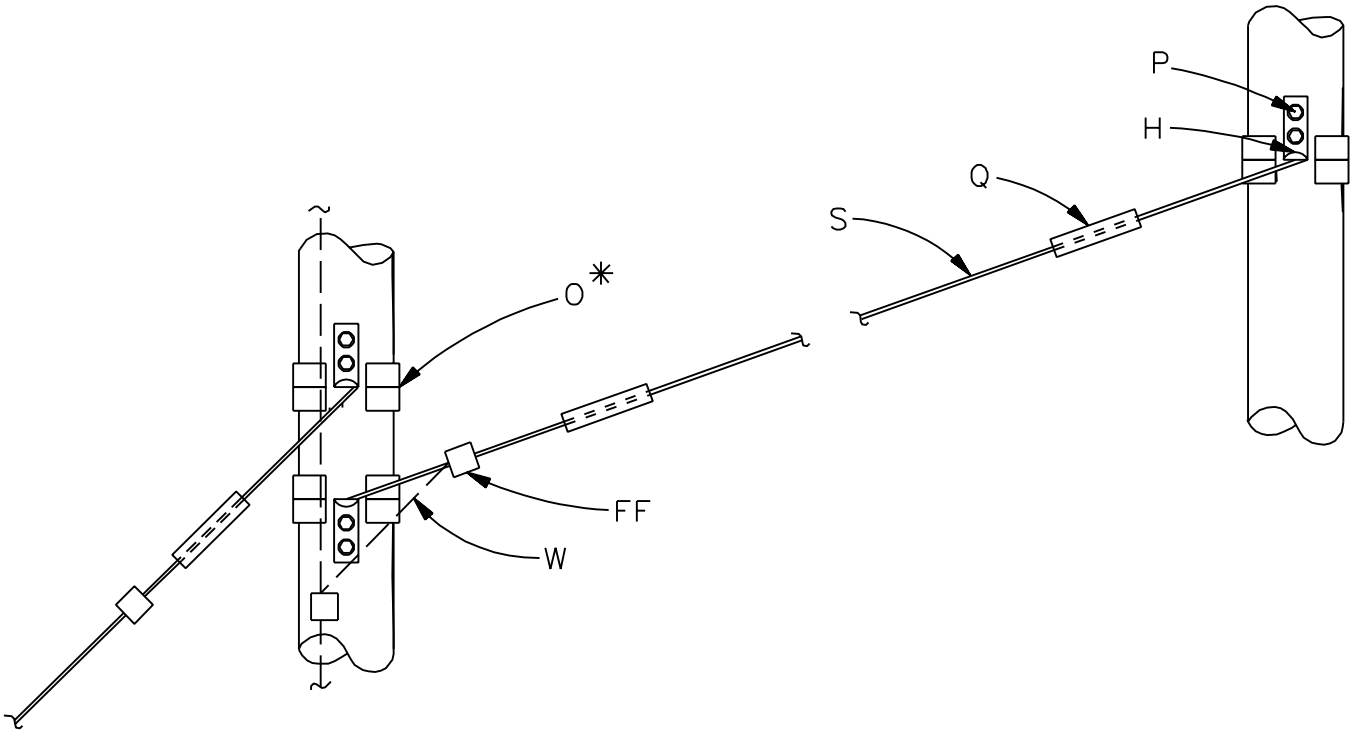

SPAN GUY

N.T.S.

FOR 27KN-44KN GUYS

*NOTE: MATERIALS INDICATED ARE REFERENCED TO PLATES E5 AND 5A.

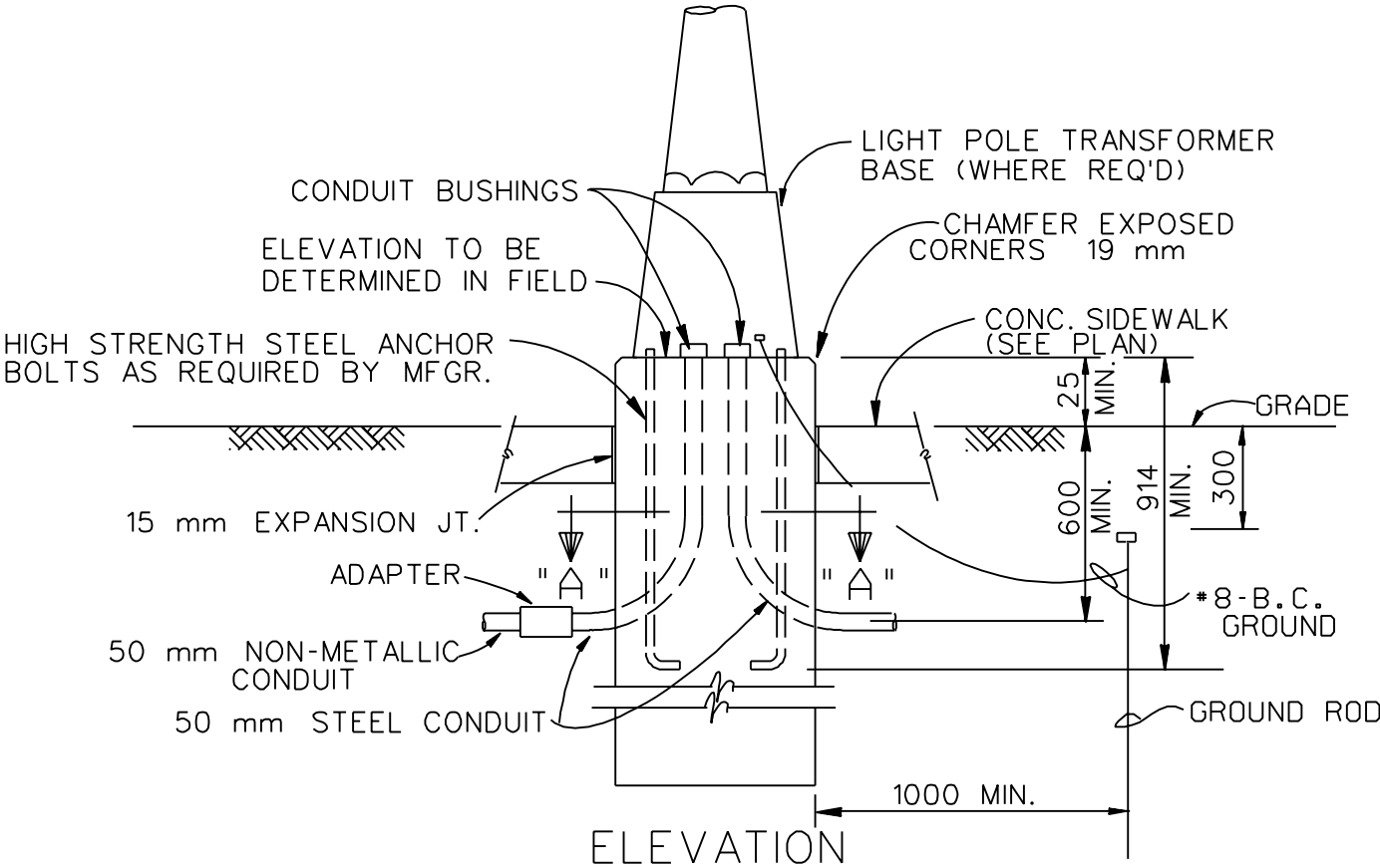

ELEVATION

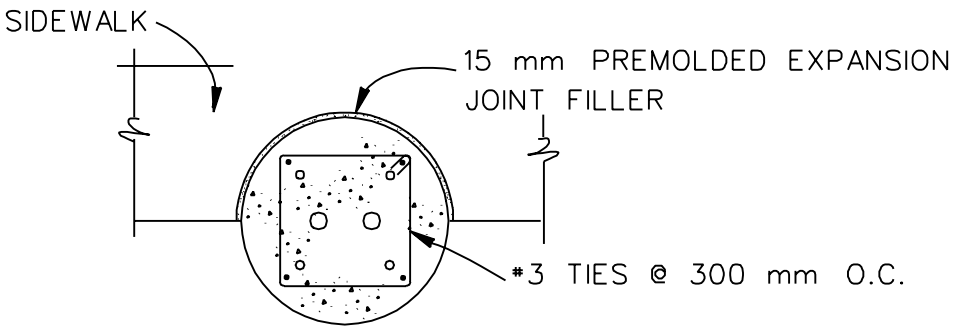

SECTION "A-A"

	PIER*		
POLE HEIGHT	DIAMETER	DEPTH BELOW FINISHED GRADE	REINFORCING
≤ 6 m	450 mm	1.5 m	4 - #6
9 m	600 mm	2.0 m	4 - #7

NOTE: * THESE ARE MINIMUM REQUIREMENTS TO BE VERIFIED BY THE STRUCTURAL ENGINEER TO SUIT SPECIFIC SITE CRITERIAL. ENGINEER SHALL DESIGN PIER FOR POLE HEIGHT > 9 m.

STREET LIGHT POLE BASE

NOT TO SCALE

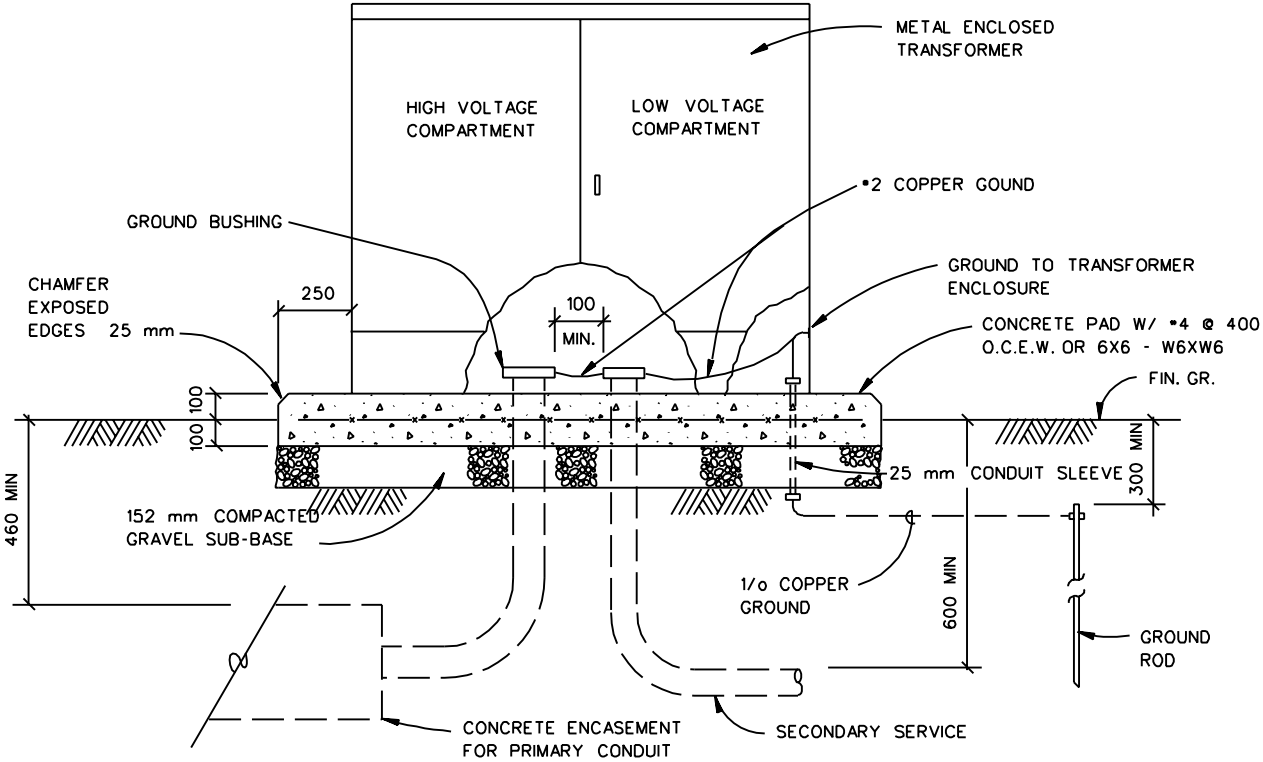

TRANSFORMER PAD DETAIL

N.T.S.

PLATE E11

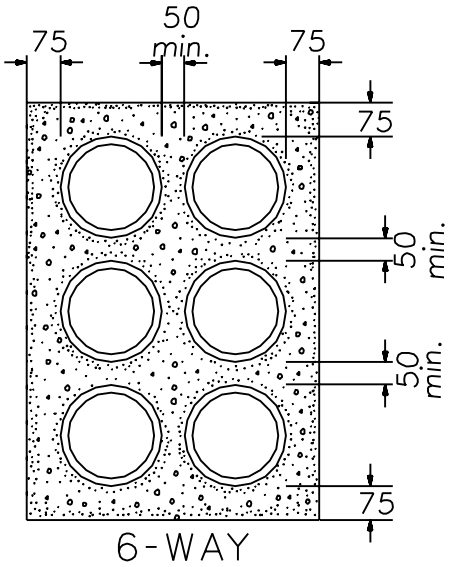

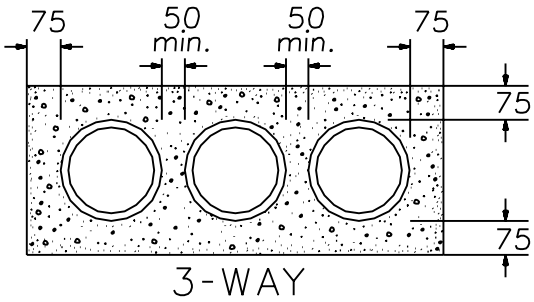

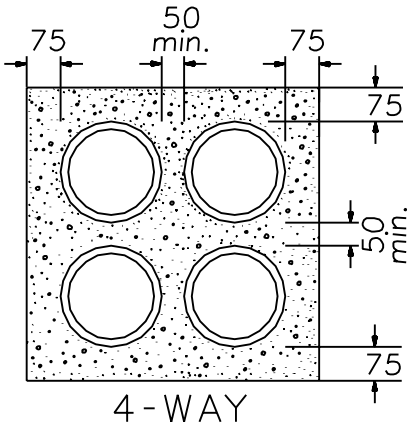

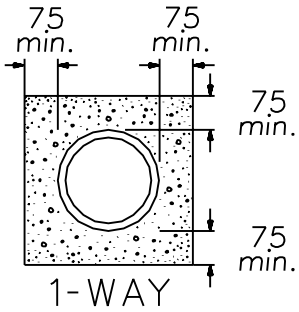

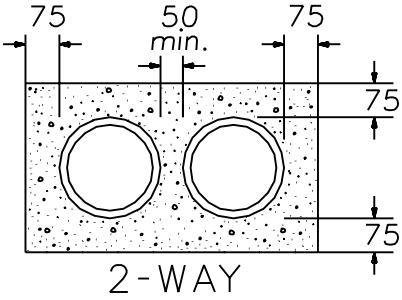

NOTE: 100mm. OF CONCRETE SHALL BE PROVIDED BETWEEN ADJACENT ELECTRIC POWER AND COMMUNICATION DUCTS.

CONCRETE ENCASED DUCT DETAILS

N.T.S.

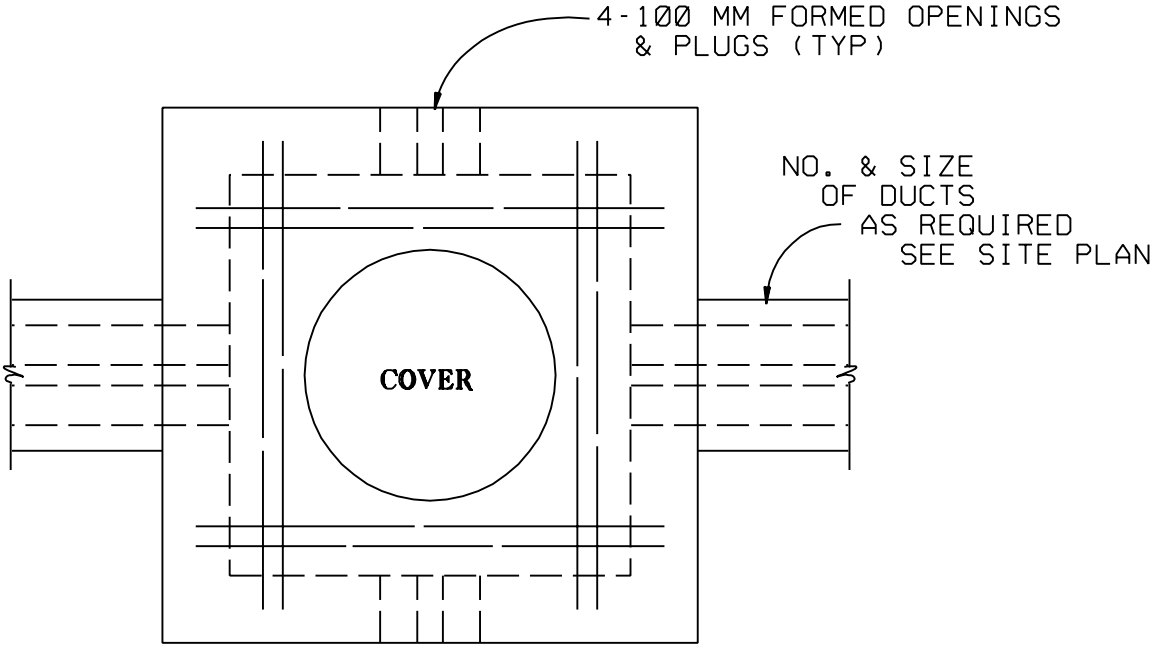

P L A N

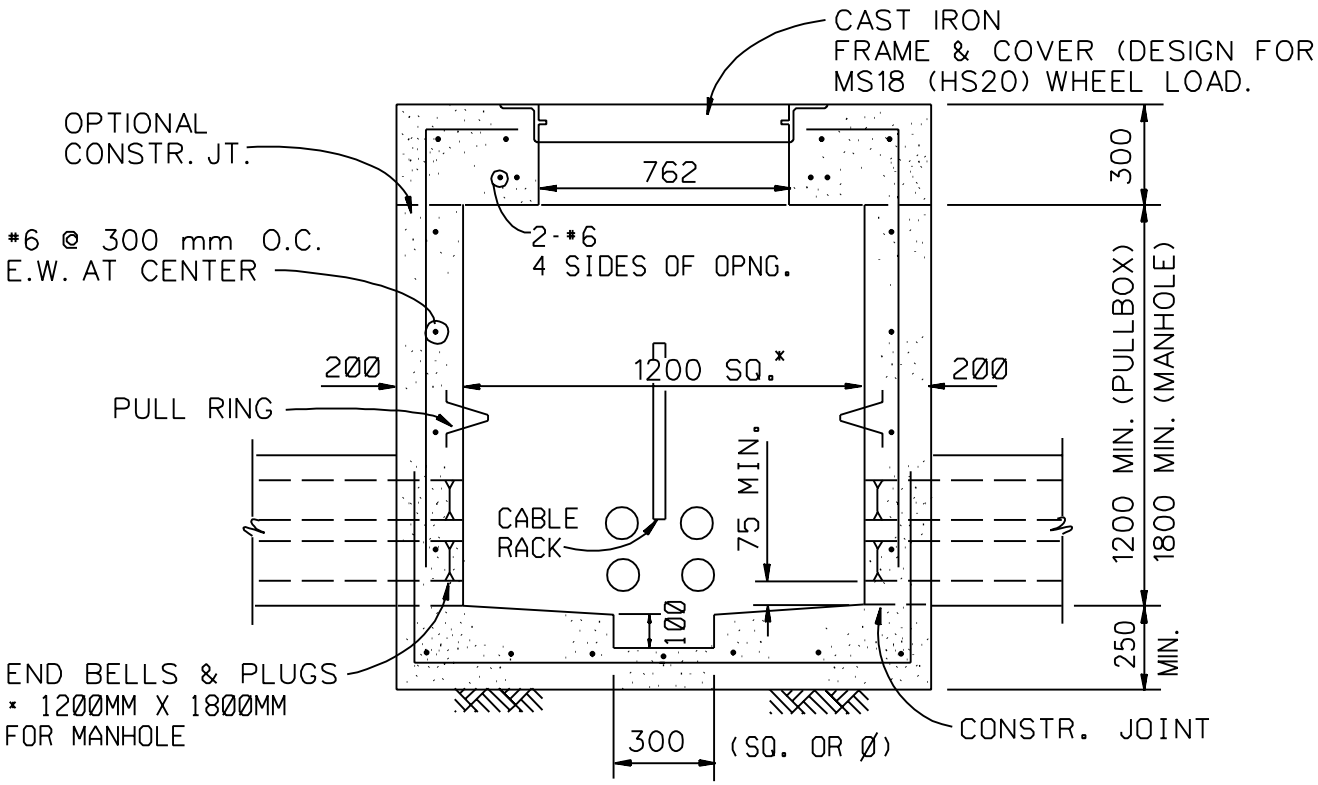

S E C T I O N

ELECTRICAL PULLBOX & MANHOLE DETAILS

N.T.S. (MS18 (HS20) WHEEL LOAD)

ANY DEVIATION FROM THE MINIMUM DIMENSIONS OR DEPTH
SHOWN WILL REQUIRE A NEW STRUCTURAL DESIGN

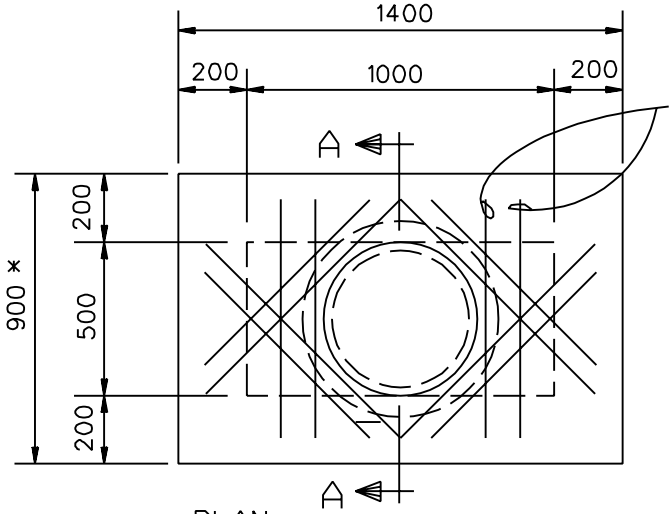

PLAN

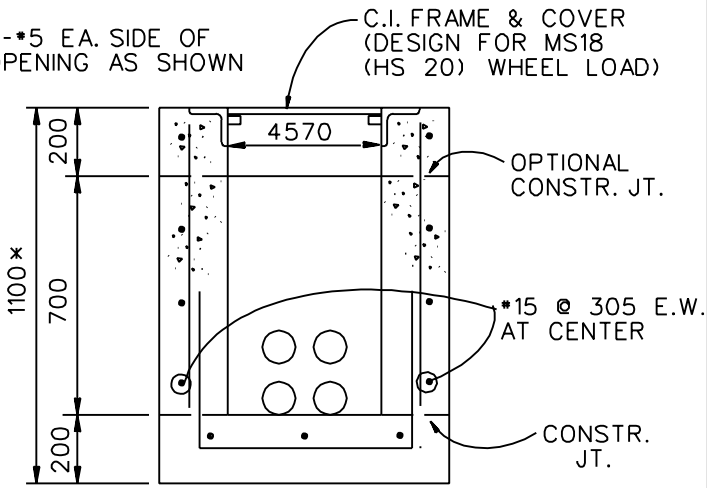

SECTION "A-A"

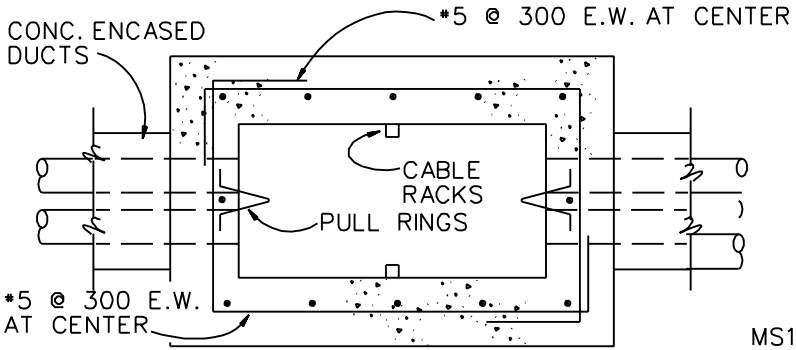

SECTIONAL PLAN

NOTE TO A-E:

SEE CEGS 16402

ELECTRICAL HANDHOLE DETAILS (FOR CIRCUITS @ 600 VOLTS, OR LESS)

N.T.S.

MS18 (H20) WHEEL LOAD

* ANY DEVIATION FROM THE PLAN DIMENSIONS OR DEPTH SHOWN WILL REQUIRE A NEW STRUCTURAL DESIGN

PLATE E14

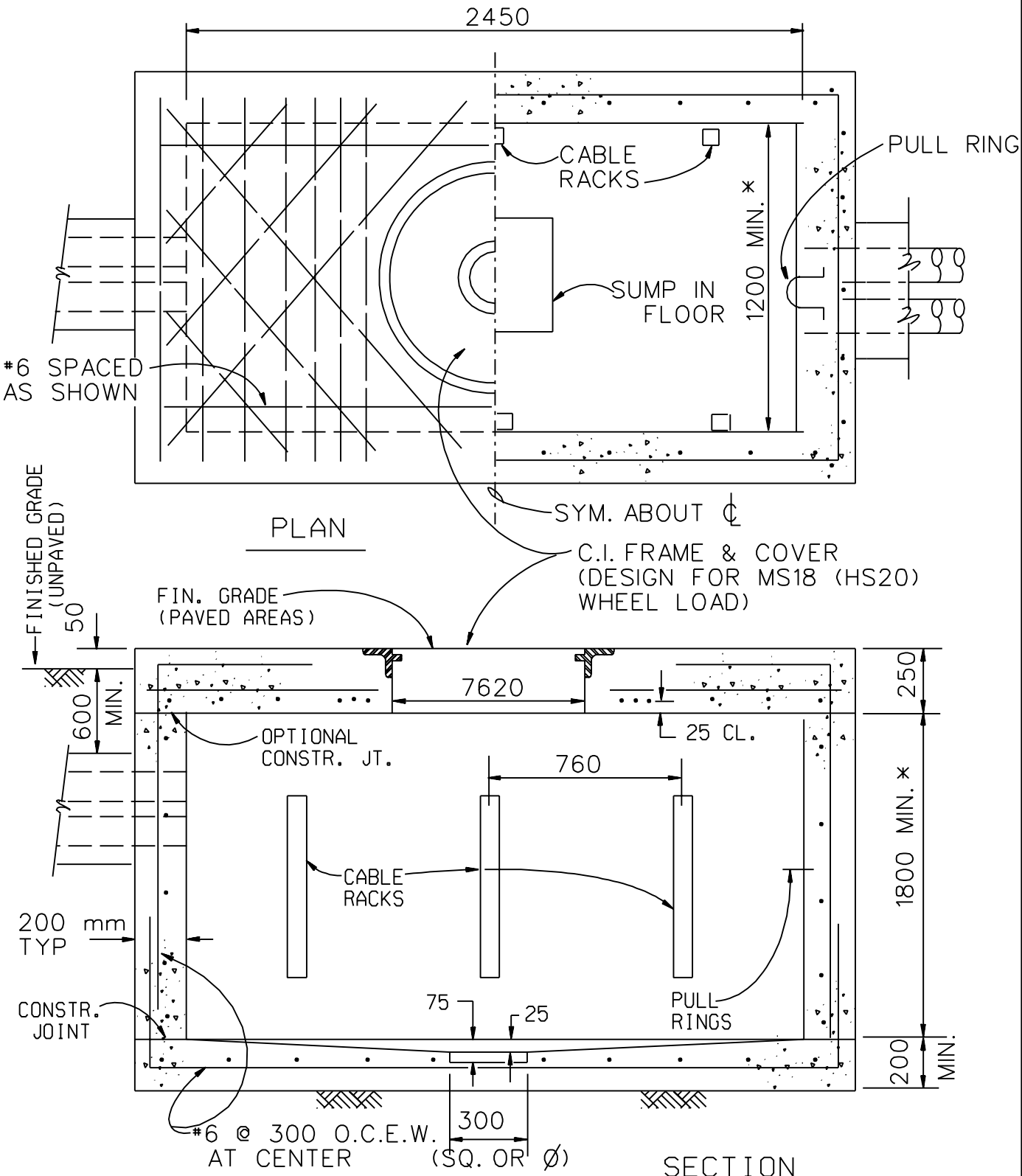

NOTE TO A-E: SEE CEGS 16402, #10

COMMUNICATIONS MANHOLE

N.T.S. (MS18 (HS 20) WHEEL LOAD)

* DEPTHS GREATER THAN 1800 WILL REQUIRE A DESIGN TO DETERMINE WALL THICKNESS AND REINFORCING.

ELECTRICAL INTERIOR LEGEND

SYMBOL	DESCRIPTION
A,b	FLUORESCENT LIGHT FIXTURE. CAPITAL LETTER DENOTES TYPE IN FIXTURE SCHEDULE. SMALL LETTER DENOTES SWITCH W/ SAME LETTER OPERATES THIS FIXTURE. CIRCLE IS OUTLET BOX.
B,c	WALL MOUNTED FLUORESCENT LIGHT FIXTURE. LETTERS SAME AS ABOVE. CIRCLE IS OUTLET BOX.
C,d	INCANDESCENT OR H.I.D. LIGHT FIXTURE. LETTERS SAME AS ABOVE.
D,e	WALL MOUNTED INCANDESCENT OR H.I.D. LIGHT FIXTURE. LETTERS SAME AS ABOVE.
WP	DUPLEX RECEPTACLE. 15A./125V. GROUNDED TYPE MOUNTED 450mm ABOVE FLOOR UNLESS OTHERWISE NOTED. "WP" INDICATES WEATHERPROOF. "GF" INDICATES GROUND FAULT INTERRUPTER. "EP" INDICATES EXPLOSION PROOF.
B	SPECIAL PURPOSE RECEPTACLE.
$a	SINGLE POLE WALL SWITCH. MOUNT 1.2m ABOVE FLOOR. SMALL LETTER DENOTES SWITCH OPERATES FIXTURE HAVING SAME LETTER.
$ $4	SAME AS SWITCH ABOVE W/ THE FOLLOWING EXCEPTIONS: 3 DENOTES 3-WAY, 4 DENOTES 4-WAY SWITCH.
5	MOTOR. NUMERAL INDICATES kW.
	MOTOR CONTROLLER.
R	SAFETY OR DISCONNECT SWITCH, UNFUSED UNLESS OTHERWISE NOTED. "R" INDICATES RAINTIGHT.
	PANELBOARD.
	CONDUIT & CONDUCTORS. NUMBER OF CROSSLINES INDICATES NUMBER OF CONDUCTORS. NO CROSSLINES INDICATES 2 CONDUCTORS.
A-1,3	BRANCH CIRCUIT HOMERUN TO PANELBOARD W/ CIRCUIT NUMBERS SHOWN. NO. OF ARROWS INDICATES NUMBER OF CIRCUITS.
J	JUNCTION BOX.
	TELEPHONE OUTLET. MOUNT 450mm ABOVE FLOOR.
TV	TV OUTLET. MOUNT 450mm ABOVE FLOOR.
F	FIRE ALARM MANUAL STATION. MOUNT 1.2m ABOVE FLOOR.
	FIRE ALARM BELL. MOUNT 2.4m ABOVE FLOOR OR WITHIN SPACE OF 150mm BELOW CEILING, WHICHEVER IS LOWER.
	COMBINATION FIRE ALARM VISUAL/AUDIBLE INDICATOR. WALL MOUNT 2030mm ABOVE FINISHED FLOOR OR 152mm BELOW CEILING, WHICHEVER IS LOWER.
V	FIRE ALARM VISUAL INDICATOR. WALL MOUNT 2030mm ABOVE FINISHED FLOOR OR 152mm BELOW CEILING, WHICHEVER IS LOWER.
A	EXIT LIGHT. CEILING MOUNTED. LETTER DENOTES TYPE IN FIXTURE SCHEDULE. PROVIDE DIRECTIONAL ARROWS WHERE INDICATED.
B	WALL MOUNTED EXIT LIGHT. LETTER & DIRECTIONAL ARROW SAME AS ABOVE.
C	BATTERY POWERED EMERGENCY LIGHT SET. TRIANGLES INDICATE NUMBER OF HEADS & DIRECTION OF AIM. MOUNT SET SO THAT HIGHEST POINT CLEARS CEILING NOT LESS THAN 150mm UNLESS OTHERWISE NOTED.
1	KEYED NOTE REFERENCE.
S_M	MANUAL MOTOR CONTROLLER.

ELECTRICAL CONDUIT

METRIC SIZES (mm)	ENGLISH SIZES (INCH)
16	1/2
21	3/4
27	1
35	1 1/4
41	1 1/2
53	2
63	2 1/2
78	3
91	3 1/2
103	4
129	5
155	6

CONDUIT (METRIC TO ENGLISH CONVERSION TABLE)

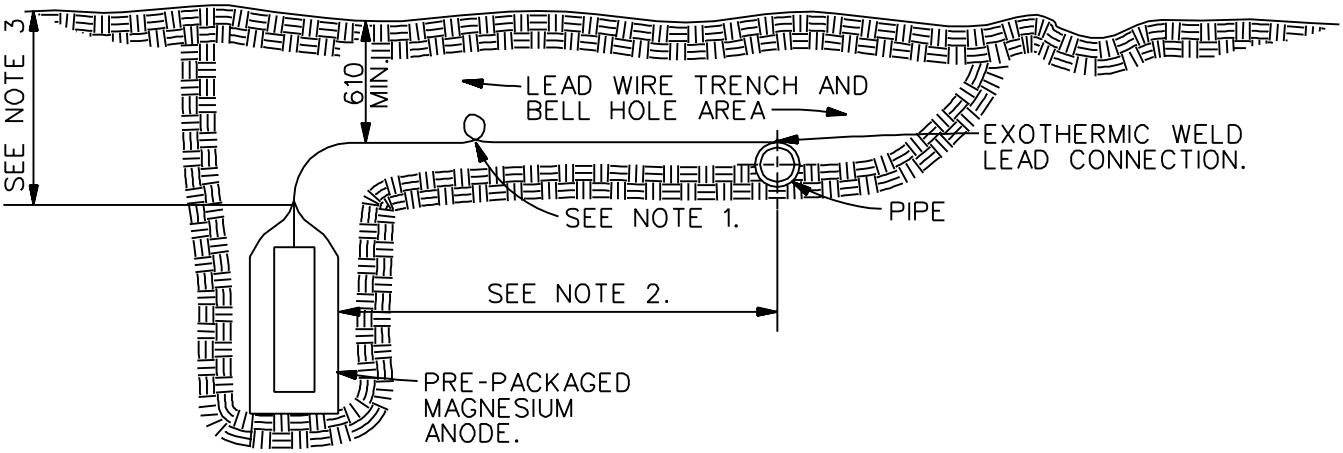

VERTICAL ANODE INSTALLATION

N.T.S.

NOTES:

1. ADEQUATE SLACK SHALL BE LEFT IN LEAD WIRE TO PREVENT DAMAGE TO LEAD DURING BACKFILLING.
2. ANODE MAY BE A MINIMUM OF 915mm AND A MAXIMUM OF 3050mm FROM STRUCTURE TO WHICH ATTACHED, EXCEPT AS OTHERWISE NOTED ON DRAWINGS OR SPECIFICATIONS.
3. TOP OF ANODE TO BE INSTALLED AT A DEPTH EQUAL TO OR EXCEEDING DEPTH OF STRUCTURE BUT IN NO CASE LESS THAN 915mm.

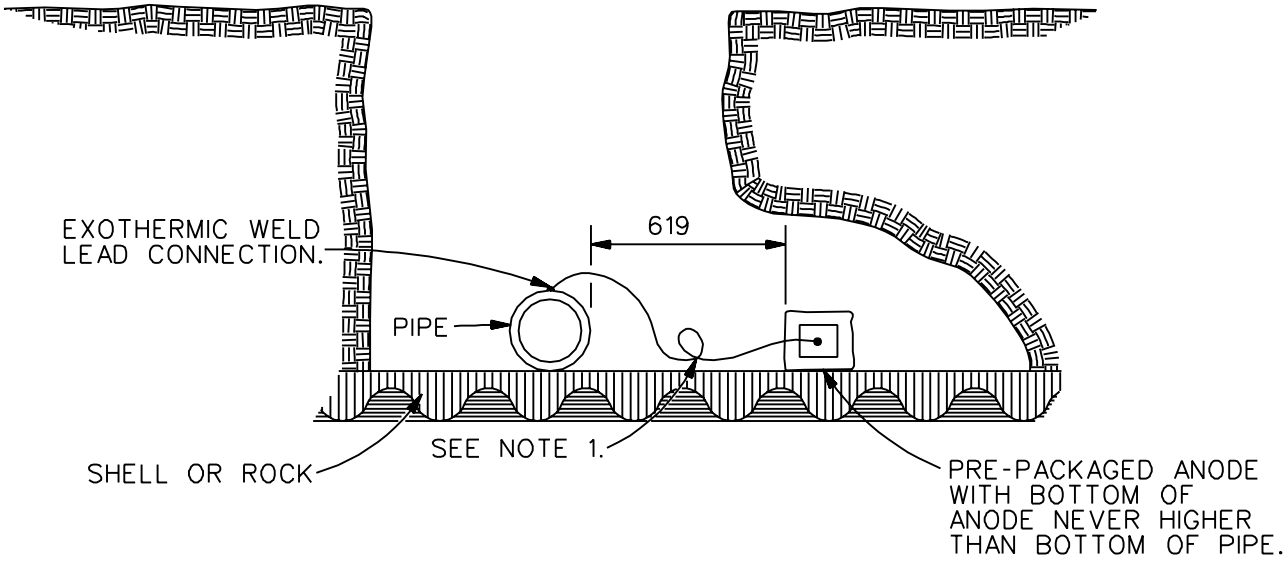

HORIZONTAL ANODE INSTALLATION

(WHERE BOTTOM OF TRENCH IS ROCK)
N.T.S.

NOTE:

1. ADEQUATE SLACK SHALL BE LEFT IN LEAD WIRE TO PREVENT DAMAGE TO LEAD DURING BACKFILLING.

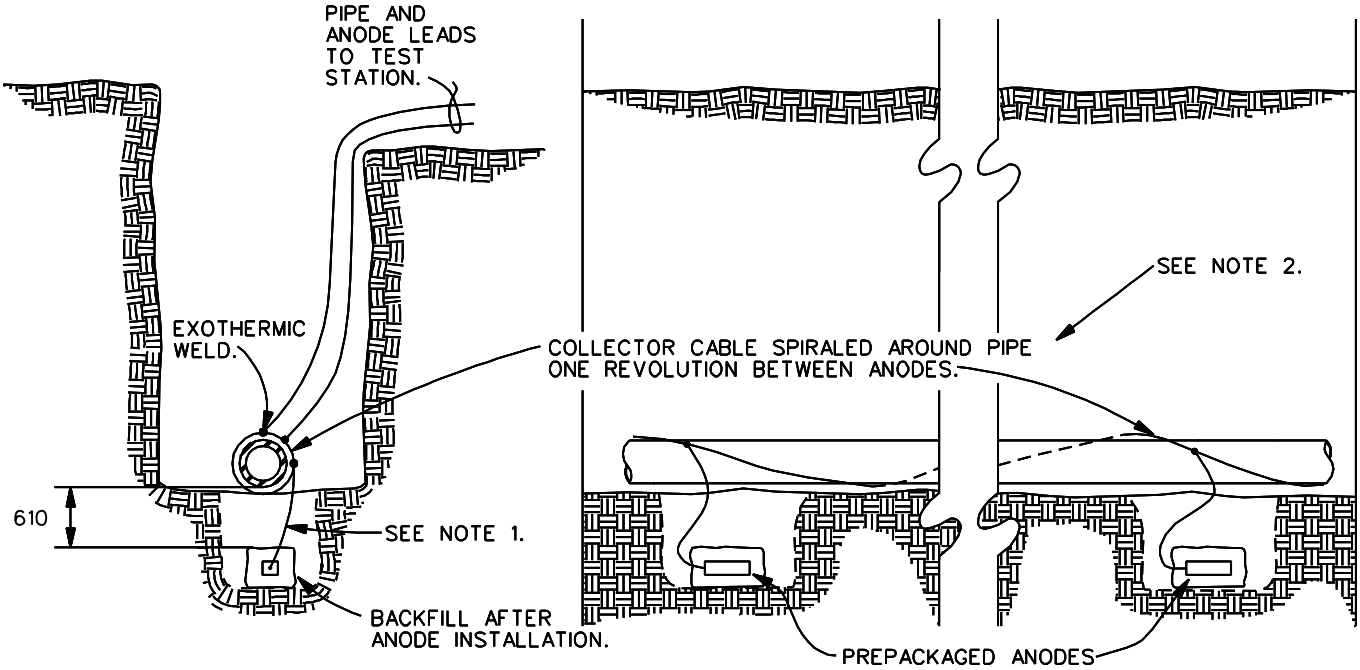

HORIZONTAL ANODE INSTALLATION

(BOTTOM OF TRENCH METHOD)
N.T.S.

NOTES:

1. ADEQUATE SLACK SHALL BE LEFT IN LEAD WIRE TO PREVENT DAMAGE TO LEAD DURING BACKFILLING.
2. SPIRALING OF COLLECTOR CABLE IS NOT MANDATORY IF CONSTRUCTION CONDITIONS DO NOT PERMIT SPIRALING.

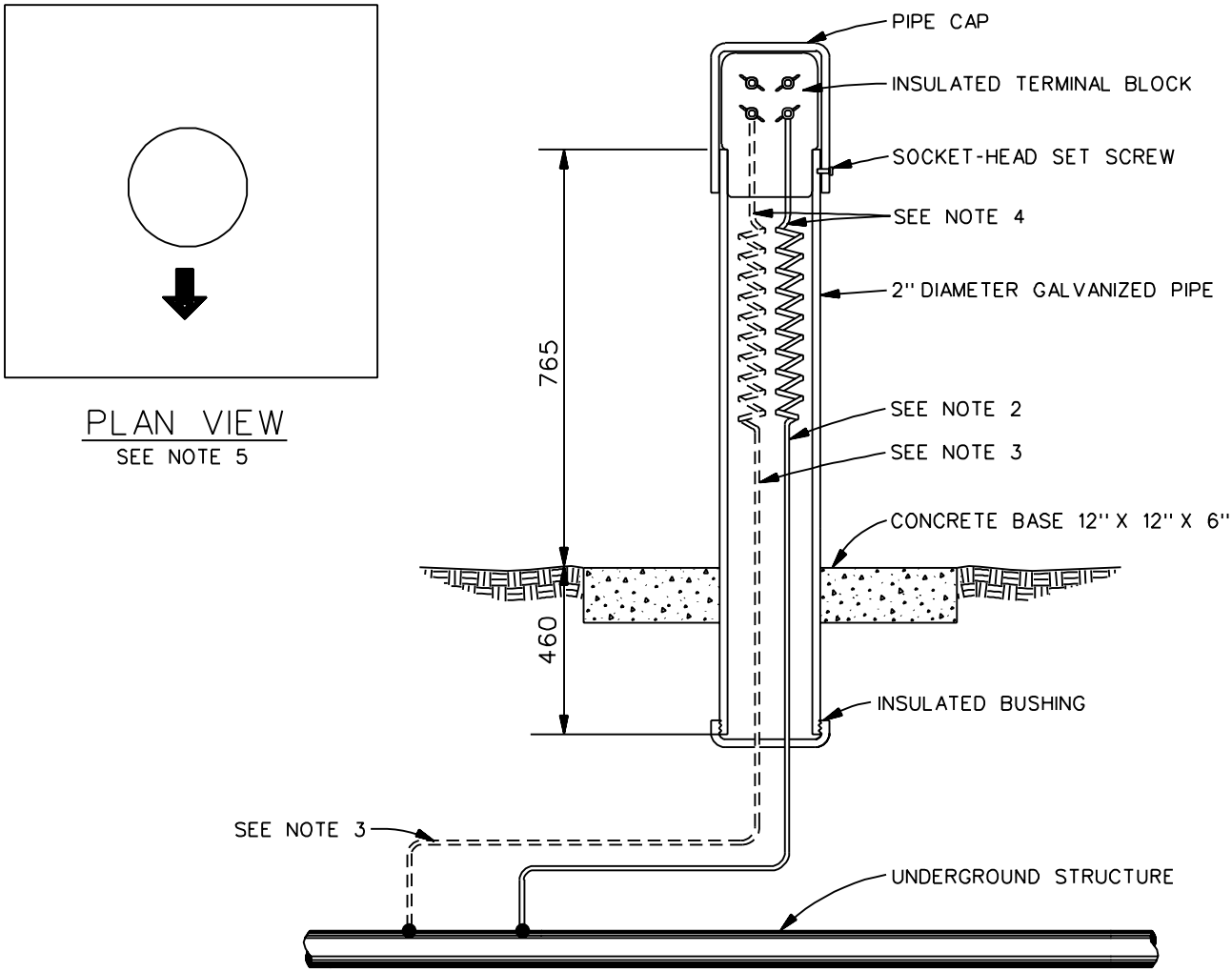

TEST STATION - ABOVE GROUND

FOR POTENTIAL MEASUREMENTS

N.T.S.

NOTES:

1. THE TYPE OF TEST STATION SHALL BE AS SPECIFIED ON THE CONTRACT DRAWINGS, OR IN THE SPECIFICATIONS, OR AS OTHERWISE DIRECTED BY THE CONTRACTING OFFICER.
2. PROVIDE ONE TEST LEAD UNLESS OTHERWISE INDICATED ON THE CONTRACT DRAWINGS, OR IN THE SPECIFICATIONS. THE TEST LEAD SHALL COLOR CODED RED.
3. A SECOND TEST LEAD IF REQUIRED SHALL BE COLOR CODED RED.
4. LEAVE SUFFICIENT SLACK IN LEADS TO ALLOW REMOVAL OF THE TERMINAL BLOCK.
5. INSCRIBE AN ARROW IN CONCRETE BASE POINTING IN THE DIRECTION OF THE BURIED STRUCTURE.
6. OTHER COMMERCIALLY AVAILABLE TEST STATIONS WILL BE ACCEPTABLE IF APPROVED BY THE CONTRACTING OFFICER.

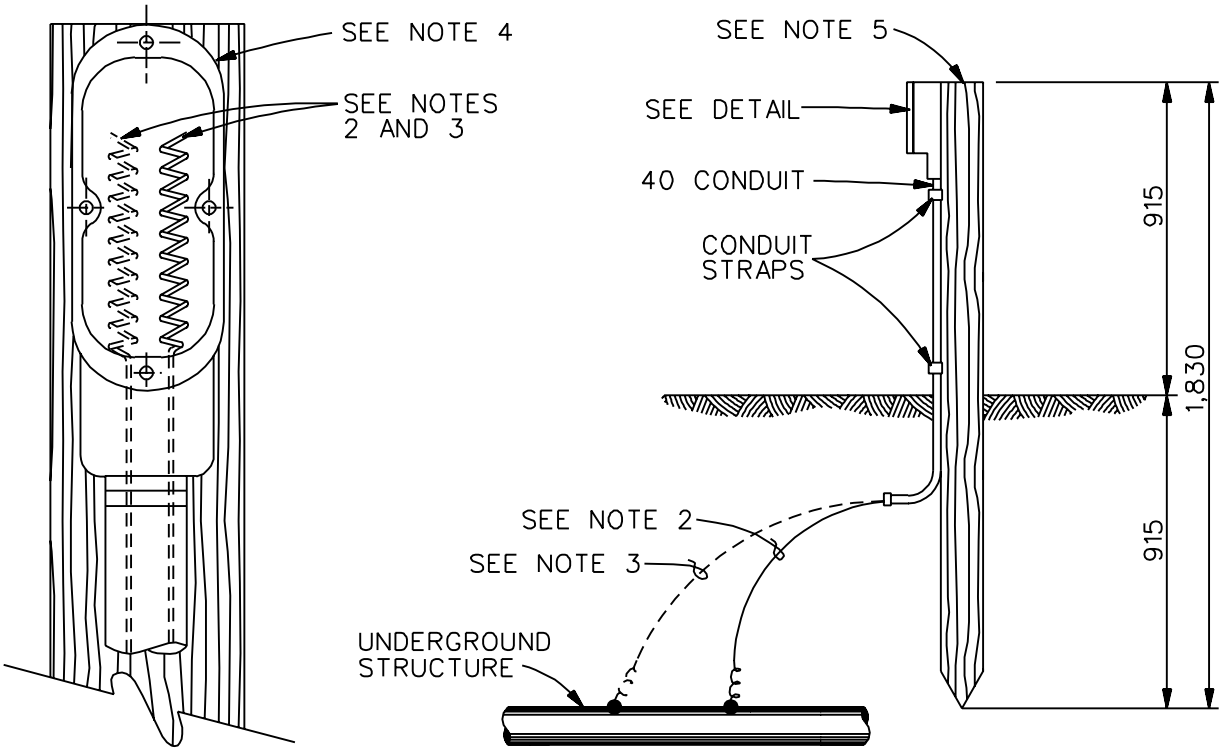

DETAIL

TEST STATION - ABOVE GROUND

FOR POTENTIAL MEASUREMENTS

N.T.S.

NOTES:

1. THE TYPE OF TEST STATION SHALL BE AS SPECIFIED ON THE CONTRACT DRAWINGS, OR IN THE SPECIFICATIONS, OR AS OTHERWISE DIRECTED BY THE CONTRACTING OFFICER.
2. PROVIDE ONE TEST LEAD UNLESS OTHERWISE INDICATED ON THE CONTRACT DRAWINGS, OR IN THE SPECIFICATIONS. THE TEST LEAD SHALL COLOR CODED RED.
3. A SECOND TEST LEAD IF REQUIRED SHALL BE COLOR CODED RED.
4. TEST STATION BOX SHALL BE CONDULET TYPE COMPLETE WITH GASKET AND COVER, SUBJECT TO APPROVAL BY THE CONTRACTING OFFICER.
5. WOOD POST SHALL BE 4" X 4" X 6'-0" LONG, PENTACHLORAPHENOL TREATED.
6. OTHER COMMERCIALLY AVAILABLE TEST STATIONS WILL BE ACCEPTABLE IF APPROVED BY THE CONTRACTING OFFICER.

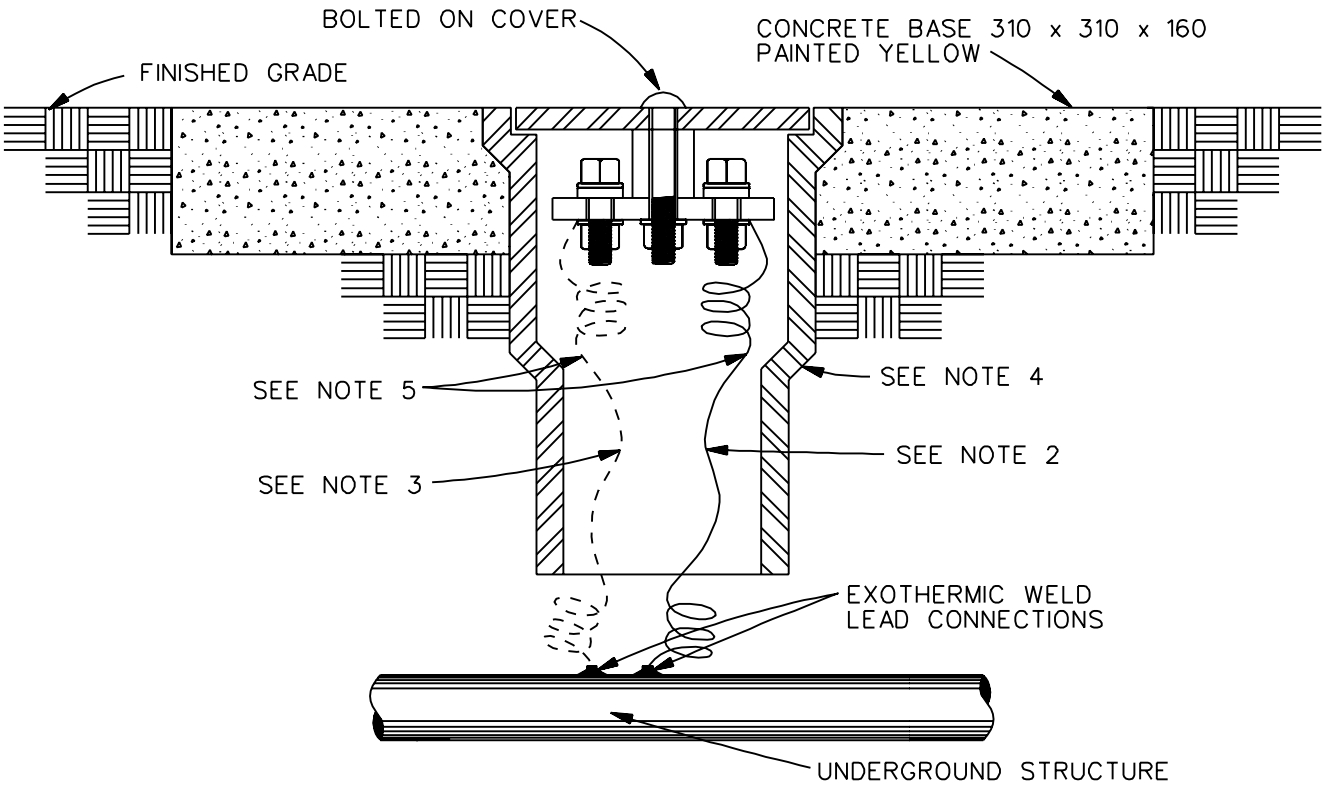

TEST STATION - FLUSH MOUNTED (FOR POTENTIAL MEASUREMENTS)

N.T.S.

NOTES:

1. THE TYPE OF TEST STATION SHALL BE AS SPECIFIED ON THE CONTRACT DRAWINGS, OR IN THE SPECIFICATIONS, OR AS DIRECTED BY THE CONTRACTING OFFICER.
2. PROVIDE ONE TEST LEAD UNLESS OTHERWISE INDICATED ON THE CONTRACT DRAWINGS OR IN THE SPECIFICATIONS. THE TEST LEAD SHALL BE COLOR CODED RED.
3. A SECOND TEST LEAD, IF REQUIRED SHALL BE COLOR CODED RED.
4. CURB BOX SHALL BE A STANDARD PRODUCT, AND MAY BE MADE OF CAST IRON OR PLASTIC. THE BOX SHALL BE COMPLETE WITH A TWO CONTACT TERMINAL STRIP BOLTED TO COVER AND READY TO RECEIVE THE TEST LEADS.
5. LEAVE SUFFICIENT SLACK IN LEADS TO ALLOW REMOVAL OF THE COVER FOR TESTING.
6. OTHER COMMERCIALLY AVAILABLE TEST STATIONS WILL BE ACCEPTABLE IF APPROVED BY THE CONTRACTING OFFICER.

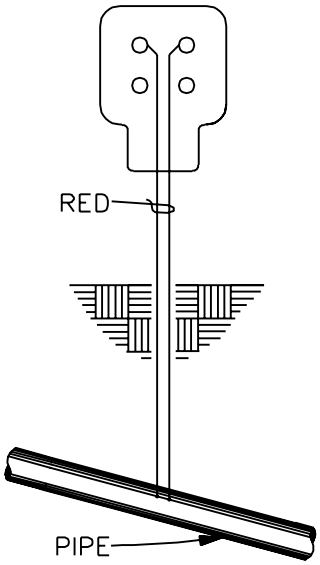

POTENTIAL
TEST STATION

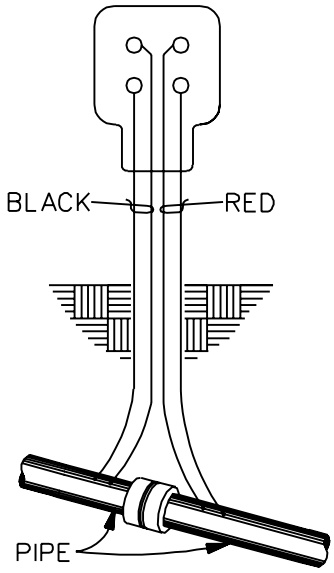

INSULATING JOINT
TEST STATION

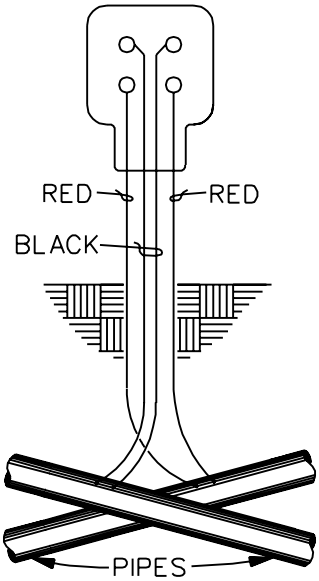

LINE CROSSING
TEST STATION

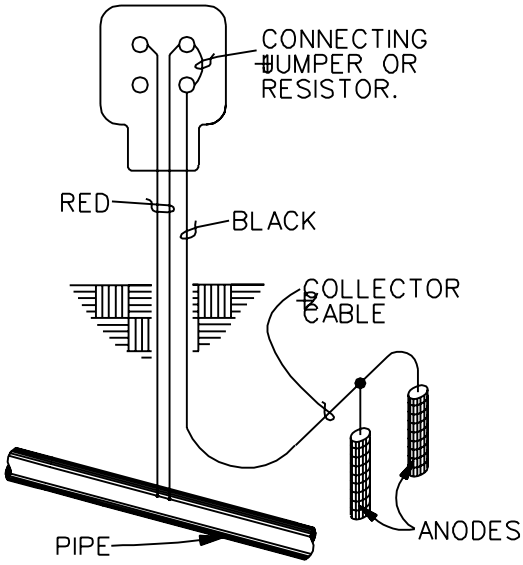

GALVANIC ANODE
TEST STATION

TEST STATION CONNECTIONS

N.T.S.

NOTE:

1. ALL LEADS SHALL BE #12 AWG TYPE "TW", RHW-USE OR POLYETHYLENE INSULATED.

PLATE E24

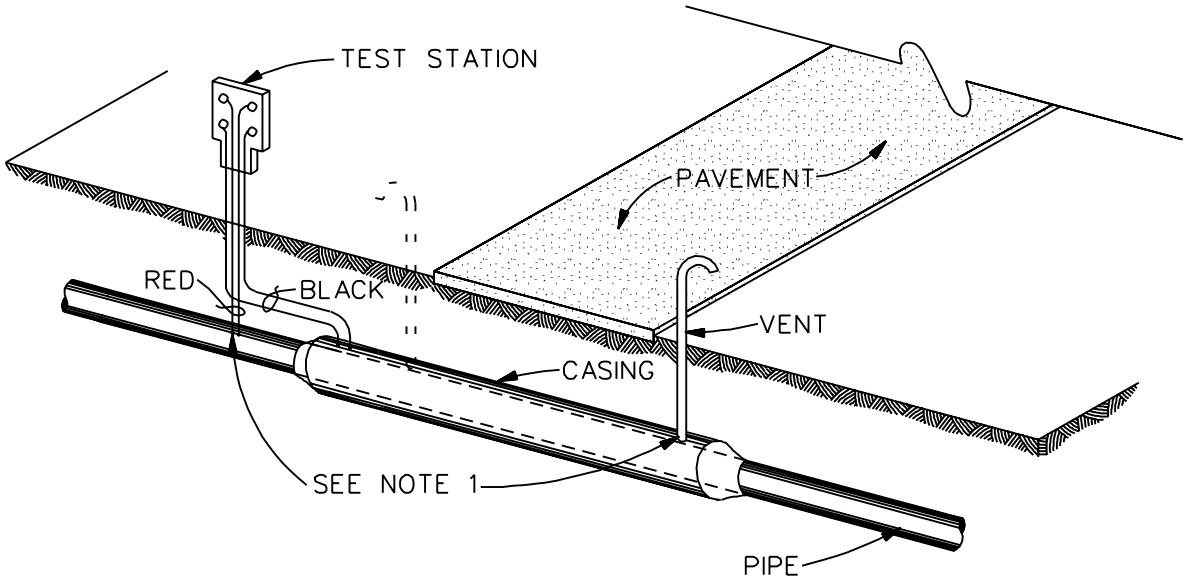

CASED ROADWAY CROSSING

N.T.S.

NOTES:

1. IF THE CASING HAS TWO VENTS ABOVEGROUND, THE CASING LEADS MAY BE OMITTED. IF ONLY ONE VENT IS PROVIDED, BOTH LEADS SHALL BE PROVIDED AND CONNECTED TO THE UNVENTED END. IF NO VENTS ARE PROVIDED, CONNECT THE BLACK CASING LEADS TO THE FAR END OF CASING.

2. ALL LEADS SHALL BE #12 AWG., TYPE "TW", RHW-USE, OR POLYETHYLENE INSULATED.

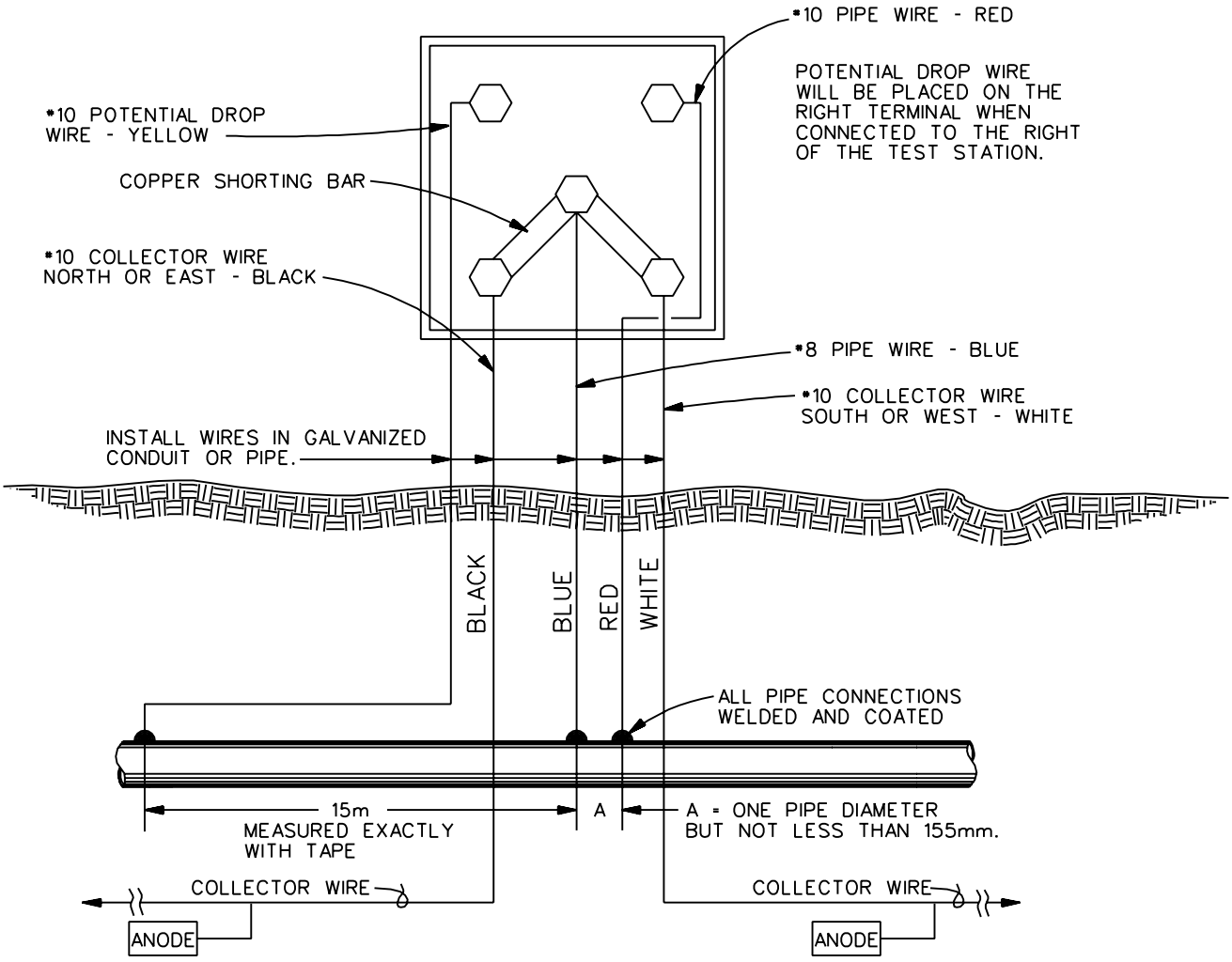

TEST STATION

FOR CONTINUOUS COLLECTOR WIRE

N.T.S.

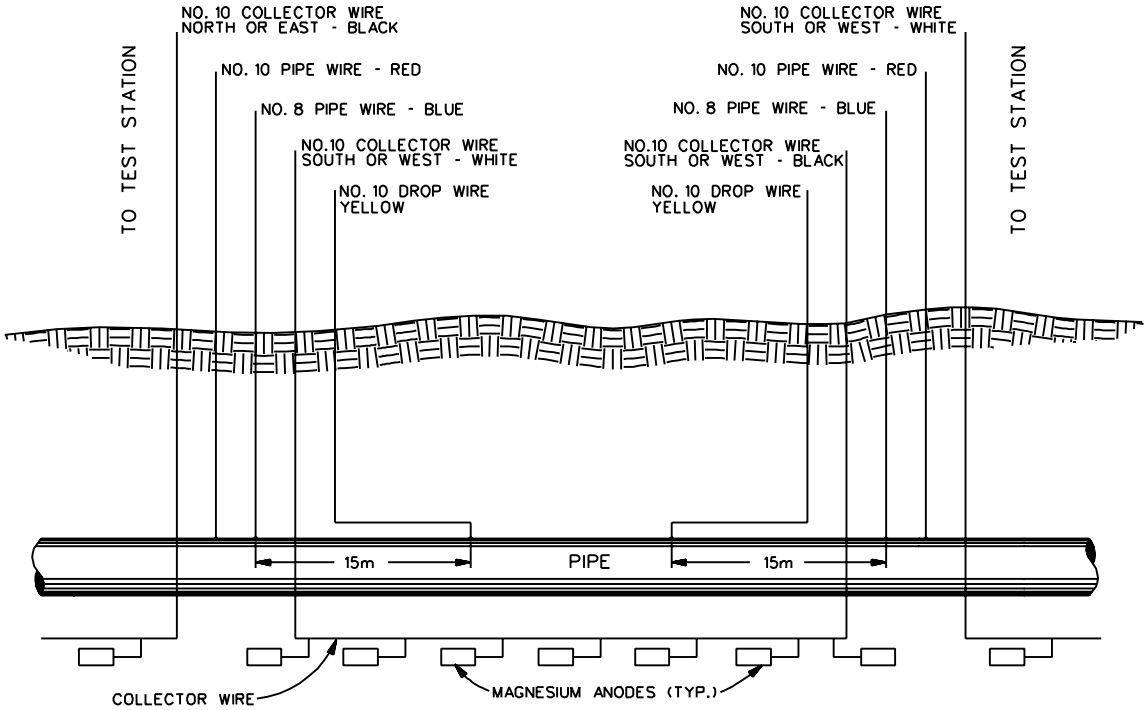

TEST STATION CONNECTIONS

FOR CONTINUOUS COLLECTOR WIRE

N.T.S.

NOMINAL PIPE OR CASING DIAMETER (mm)	MAXIMUM DISTANCE BETWEEN ANODES ON ELECTRICALLY CONTINUOUS NEW COATED PIPING
50 (2")	450m
80 (3")	300m
100 (4")	230m
150 (6")	150m
200 (8")	120m
250 (10")	100m
300 (12")	80m
350 (14")	75m
400 (16")	65m
450 (18")	60m
500 (20")	50m
600 (24")	45m
650 (26")	40m
750 (30")	35m
900 (36")	30m

THE ABOVE TABLE BASED ON:

(A) USE OF 7.71 Kg PACKAGED MAGNESIUM ANODE WITH TWENTY YEAR DESIGN LIFE.

(B) MINIMUM COATING RESISTANCE OF 50,000 OHMS PER SQUARE FOOT AND MAXIMUM 3% BARE SURFACE AREA WITH PIPE IN PLACE.

(C) AVERAGE CURRENT DENSITY OF 1.5 MILLIAMPERES PER SQUARE FOOT OF BARE SURFACE AREA.

(D) INDIVIDUAL PIPING RUNS HAVING ELECTRICAL CONTINUITY AND BEING INSULATED FROM CONNECTING OR FOREIGN STRUCTURES.

MAGNESIUM ANODE INSTALLATION SPACING

NOTES TO DESIGNER:

1. ON PIPING RUNS REQUIRING MORE THAN ONE ANODE, ANODES SHALL CONFORM TO MAXIMUM DISTANCES SHOWN ABOVE, OR SPACED AT EQUAL LESSER INTERVALS ALONG THE LINE BASED ON LENGTH OF LINE AND NUMBER OF ANODES REQUIRED.

2. WHERE THE TOTAL LENGTH OF PIPE TO BE PROTECTED IN ANY SINGLE RUN IS LESS THAN THAT SHOWN IN THE TABLE ABOVE, INSTALL ONE ANODE NEAR MIDPOINT OF PIPE OR CASING.

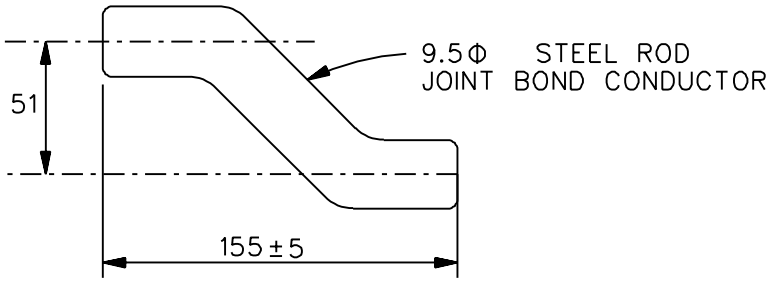

STEEL PIPE JOINT BOND

N.T.S.

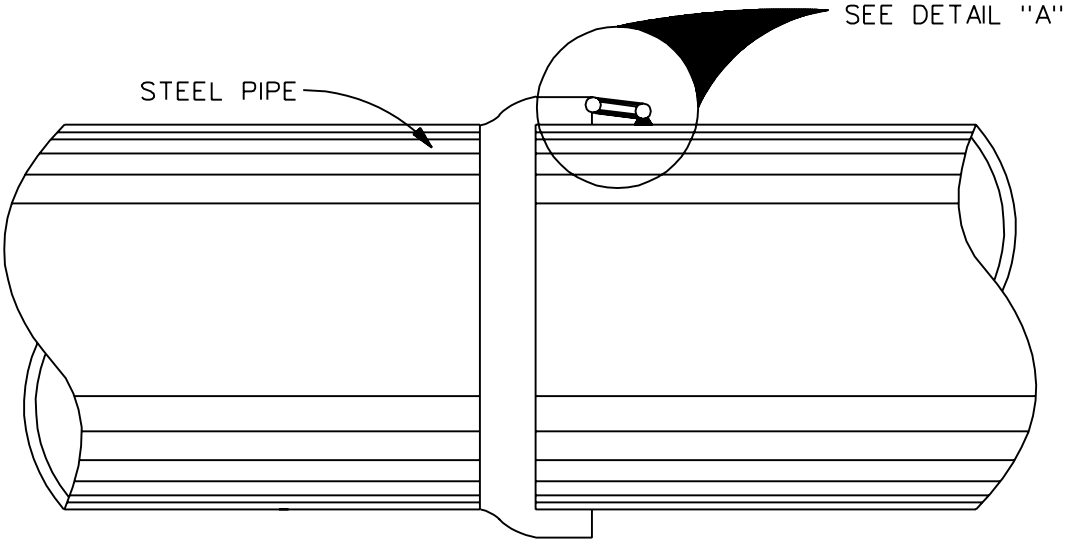

ELEVATION

N.T.S.

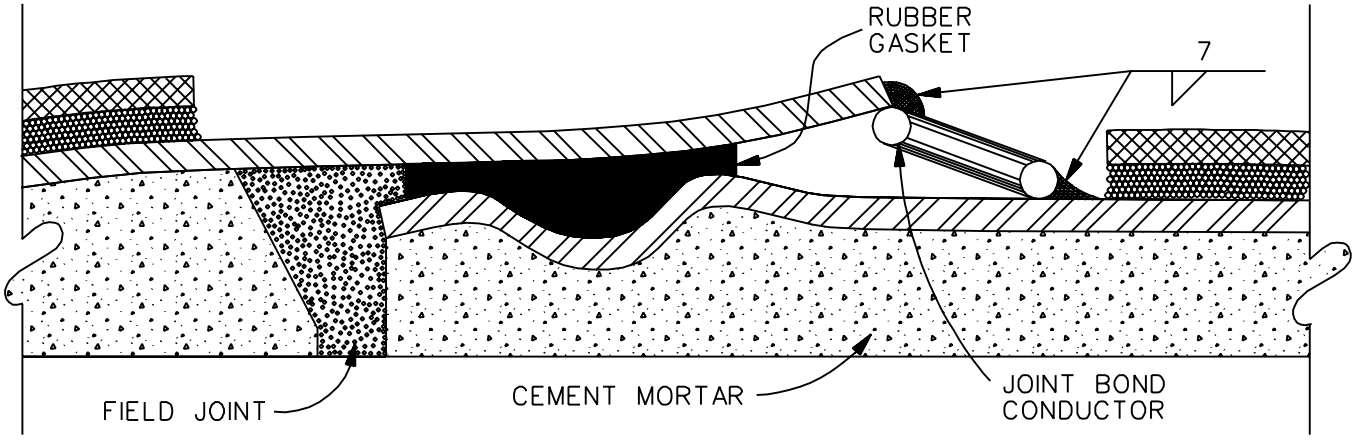

DETAIL "A"

N.T.S.

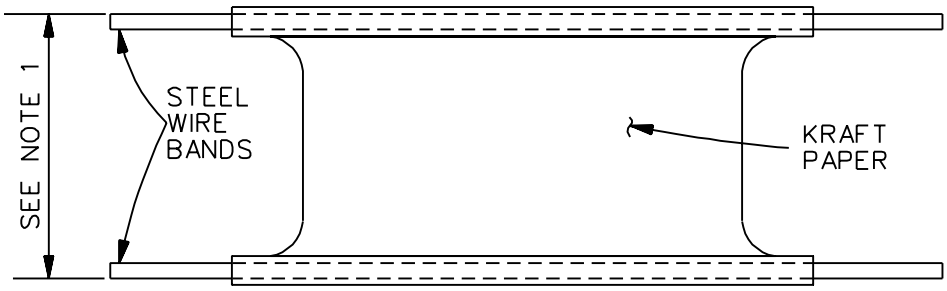

DETAIL OF PAPER JOINT COVER

N.T.S.

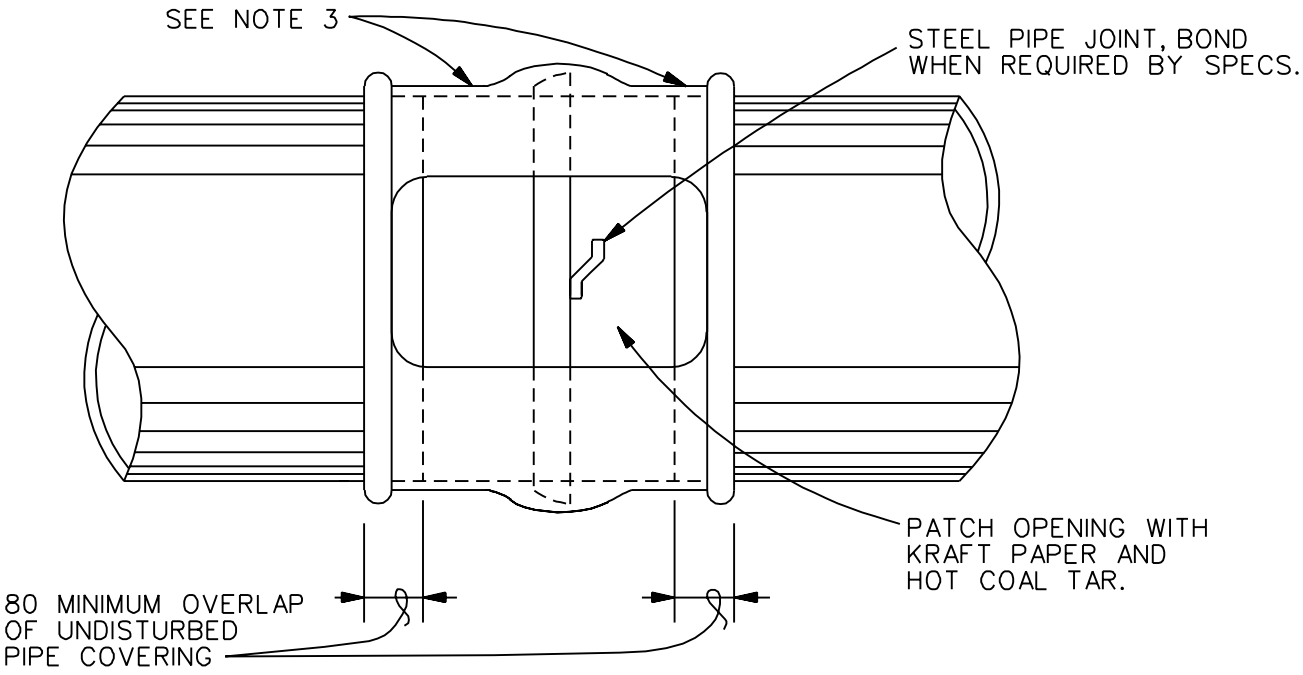

INSULATING COUPLING

N.T.S.

NOTES:

1. WIDTH AS REQUIRED TO PROVIDE OVERLAP OF 80mm EACH SIDE AS INDICATED.
2. FILL JOINT COVER WITH HOT COAL TAR ENAMEL FROM ONE SIDE ONLY UNTIL THE AIR IS EXHAUSTED AND COVER IS FILLED.
3. OUTER SHOULD BE STRIPPED BACK NOT LESS THAN 80mm EACH SIDE OF JOINT TO ALLOW MAXIMUM BOND OF THE NEW TAR TO EXISTING TAR COATING.

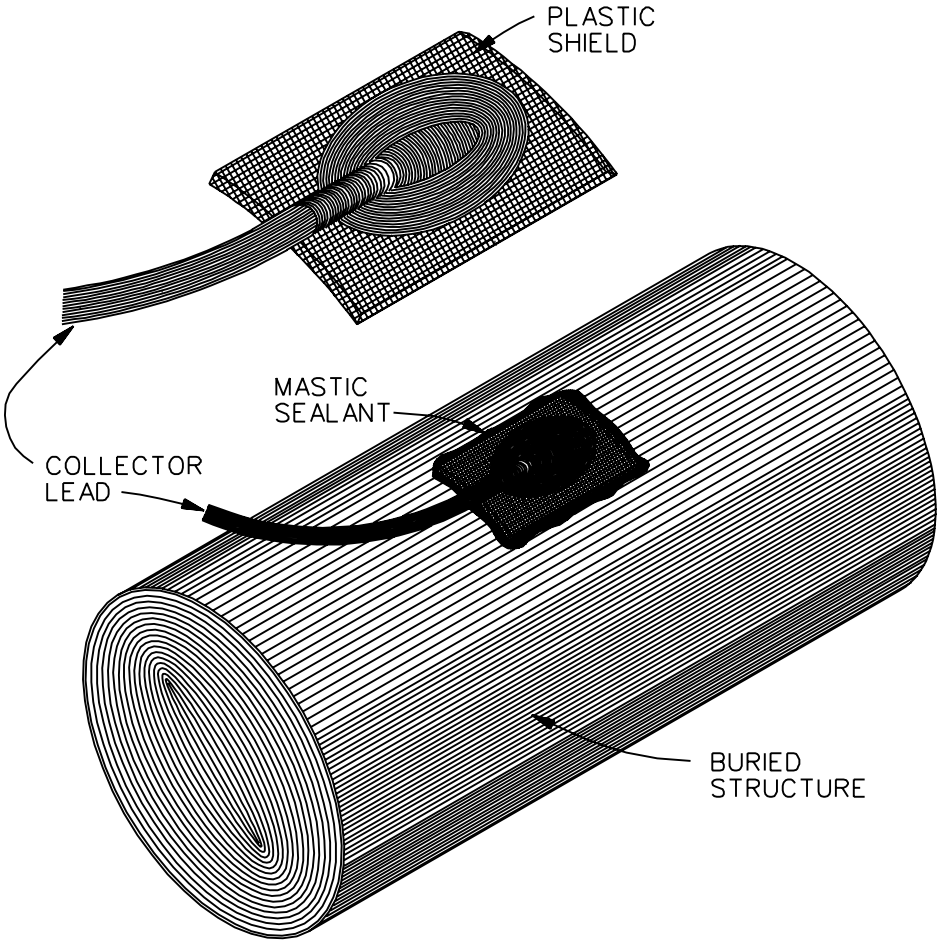

BACKFILL SHIELD

N.T.S.

NOTES:

1. SHIELD SHALL BE COMPLETELY FILLED WITH MASTIC SEALANT AND PRESSED IN CONTACT WITH THE PIPE OVER THE CONNECTION, UNTIL MASTIC IS SQUEEZED OUT OF THE SHIELD.

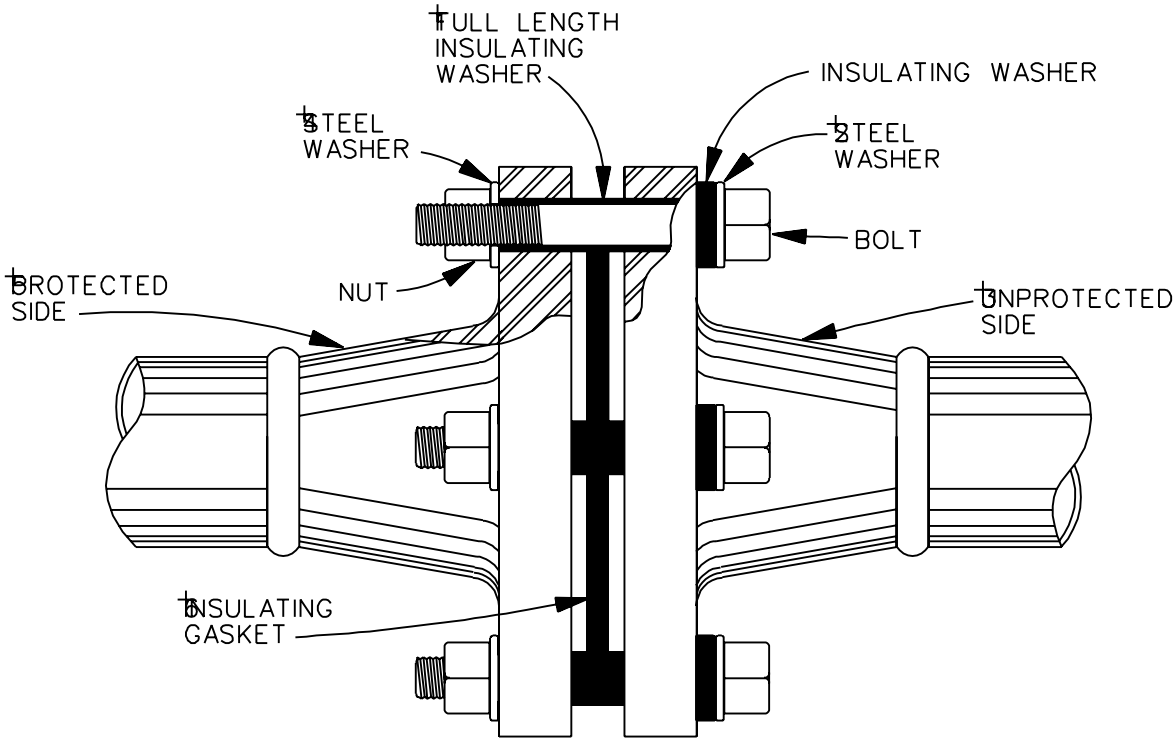

INSULATED FLANGED JOINT

N.T.S.

1. SEE SPECIFICATIONS FOR GASKET, WASHER & SLEEVE MATERIALS.
2. CARE SHALL BE TAKEN FOR PROPER ALIGNMENT BEFORE ASSEMBLY.
3. 10 INSULATED JOINT WILL BE INSTALLED IN THE PIPING WHERE INDICATED ON THE DRAWING, AND BEFORE ANY OTHER CONNECTIONS TO PIPING ARE MADE.
4. 7 INSULATED JOINTS SHALL BE ASSEMBLED AND INSTALLED IN ACCORDANCE WITH THE JOINT ASSEMBLY MANUFACTURER'S RECOMMENDATIONS.

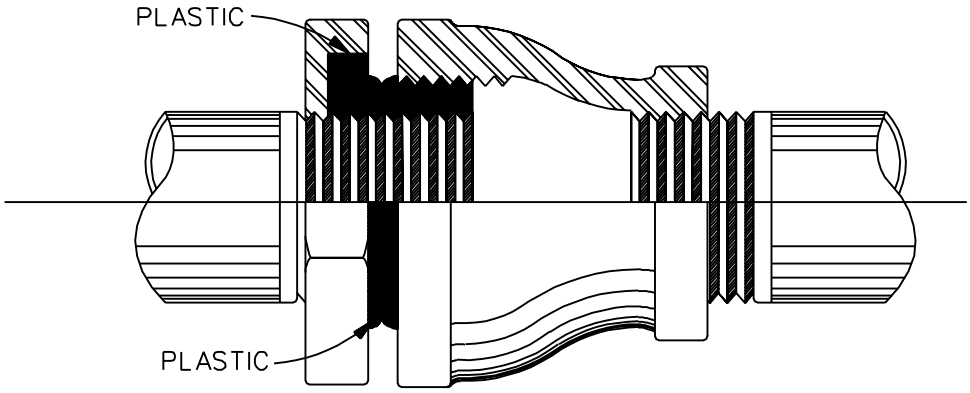

INSULATED FLANGED JOINT

N.T.S.

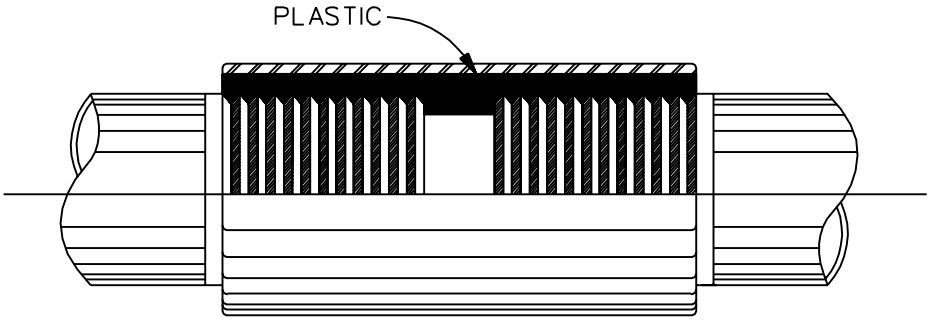

INSULATING COUPLING

N.T.S.

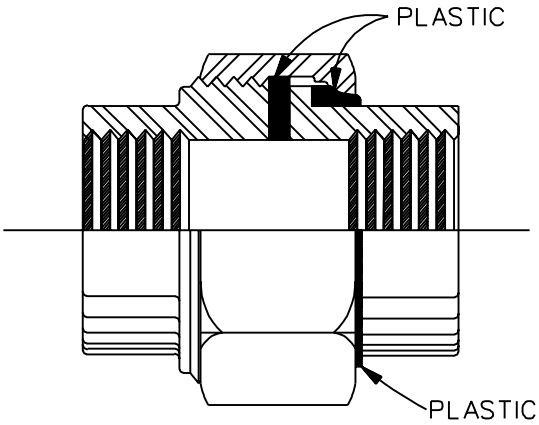

INSULATING UNION

N.T.S.

APPENDIX B

DESIGN REVIEW CHECKLIST

ELECTRICAL

1. Provide complete electrical legends for exterior and interior.

2. When extending aerial primary lines for short distances, the configurations and material shall be the same as existing unless directed otherwise.

3. Provide details for congested poles.

4. On cluster-mounted transformers, do not put fuse cutouts on the same side of pole as middle transformer.

5. Do not leave aluminum in contact with earth.

6. For 4/0 copper primary and larger, or aluminum equivalent, require 95.25mm x 120.65mm (3-3/4" x 4-3/4") crossarms, special deadends, and show calculations for guy strengths.

7. Taps to primary for transformers should show hot line clamps attached to stirrups (bail).

8. Provide complete electrical and communication plan and details: Underground duct banks, location, duct size, direct burial or concrete encased; identification of primary and secondary lines; conductor size and quantity, overhead lines, and secondary lines; conductor size and quantity, overhead lines, primary and secondary; pole size and class; light standards, location, fixture, base and reinforcing, pole material hardware list.

9. Feeder circuits shall coincide with utility drawings for size and location. Show correct voltage, conductor size and material for existing primary being tapped or extended.

10. Any extension of an existing loop primary shall maintain loop capability.

11. Do not require surge arresters in deadfront, pad-mounted transformers with loop feed.

12. Provide a one-line or riser diagram for the fire alarm, telephone, and television systems. Indicate correct conduit and wire sizes on plans or in the specifications.

13. Show grounding for building service and separately derived systems. Insure that grounding electrode conductors are shown and sized on the drawings. Special grounding requirements shall be appropriately detailed.

14. Show or note boundaries (in all three dimensions) of hazardous areas on drawings. Show class and division identification numbers and group identification letter for hazardous locations as required by the NEC. Indicate maximum temperature for lighting fixtures when applicable.

15. Supply battery-operated emergency lights from an unswitched hot leg of a light circuit serving room where emergency light is located.

16. Provide emergency lights in stairwells of multi-story buildings.

17. Provide clearance around electrical equipment for operation and maintenance as required by the equipment manufacturer, National Electrical Code or National Electrical Safety Code, whichever is greatest. Required clearances are to be indicated with dashed lines and coordinated with other disciplines.

18. Insure that a note is added to the drawings prohibiting the installation of conduit in concrete floor toppings less than 76mm thick.

19. Do not allow back-to-back or thru-wall boxes in walls where sound transmission is objectionable.

20. Do not show conductor insulation types on drawings.

21. Provide 10-25% spare circuit breakers in branch panelboards. Spare breakers should be consistent with panelboard usage; e.g., 20A/1P type for lighting and receptacle panels and 3-pole for equipment and distribution boards sized typically for loads encountered. Leave "space

only" where additional capacity exists. Designers shall ensure that panelboard mains are adequate to accommodate potential new loads within reasonable limits.

22. Rooms for storing and charging batteries are not considered as hazardous areas as defined by the National Electrical Code. Provide adequate ventilation with an interlock between fans and charging equipment.

23. All fire alarms being transmitted to central station equipment shall be compatible with existing equipment.

24. Receptacles with G.F.I. shall be installed only where required by the National Electrical Code. See Chapter 3 of TM 5-811-2/AFM 88-9, Chapter 2.

25. White Sands Missile Range: Wooden cross arm braces are required on 15 KV aerial distribution construction.

26. Mess hall gas-fired toasters require 110V AC for conveyor motor. Steam-fired vegetable cookers require 110V AC for controls.

27. The cathodic protection designer should coordinate with the underground piping designer to assure that pipe coating specified in the pipe specification.

CHAPTER VII

SPECIFICATIONS

Table of Contents

1. GENERAL INSTRUCTIONS
    - 1.1 Architect Engineer Responsibilities
    - 1.2 Corps of Engineers Military Guide Specifications
    - 1.3 SpecsIntact
    - 1.4 WordSpec
    - 1.5 ENG Form 4288 "Submittal Register"
    - 1.6 Old Guide Specifications
    - 1.7 Buy American Act

2. SUBMITTAL REQUIREMENTS
    - 2.1 Project Definition/Project Engineering/Concept Submittal
    - 2.2 Preliminary Design (60%) Submittal/Final Submittal
    - 2.3 Corrected Final Submittal (100%)
    - 2.4 Electronic Bid Set

3. ORGANIZATION OF CONTRACT SPECIFICATIONS
    - 3.1 Construction Specifications Institute (CSI) Format
    - 3.2 Divisions
    - 3.3 Specification Section Number
    - 3.4 Specification Format

4. EDITING GUIDES
    - 4.1 Prepare and Submit
    - 4.2 General and Additional Notes
    - 4.3 Deviations for CEGS
    - 4.4 Edit the CEGS
    - 4.5 Contract Specs
    - 4.6 Federal Specs, Military Specs, or Industry Standards
    - 4.7 CEGS Reference
    - 4.8 Reference to Third Party
    - 4.9 Cross Reference
    - 4.10 Reference to Drawings
    - 4.11 Conflicts
    - 4.12 Terminology
    - 4.13 Use of "shall," "will," "may," and "should"
    - 4.14 Use of Phrase "Not Used"
    - 4.15 A-E Developed Specification Sections
    - 4.16 Amendment Changes

Table of Contents (cont.)

5. BIDDING SCHEDULE

6. GOVERNMENT-FURNISHED EQUIPMENT OR MATERIALS

7. INSTRUCTIONS FOR PRINTING SPECIFICATIONS
    7.1 SpecsIntact format
    7.2 Reproduction Quality

CHAPTER VII

SPECIFICATIONS

1. **GENERAL INSTRUCTIONS**.

1.1 **Architect Engineer (AE)** is responsible for the preparation of all the contract specs technical Divisions 2 thru 16, a table of contents listing technical Divisions 2 thru 16, a bidding schedule, submittal registers, and a list of contract related government furnished and contractor installed property. Prepare contract specifications per ER 1110-1-8155, Specifications, and these instructions.

1.2 **The Corps of Engineers Military Guide Specifications (CEGS)**, which are the master guide specifications issued by the Corps of Engineers, are available from TECHINFO and Construction Criteria Base (CCB). TECHINFO is a computer based criteria information system that may be accessed at Internet address http://www.hnd.usace.army.mil/techinfo/. CCB is a Department of Defense-sponsored compact disk-read only memory (CD-ROM) system distributed by the National Institute of Building Sciences (NBIS). Several commercial sources do not include all Corps of Engineers approved revisions and if utilized, the AE must verify with the Technical Leader (TL) that the guides are the latest version available. The AE should coordinate with the TL for District supplemental changes to particular guides.

1.3 **SpecsIntact** is an automated specification processing system for use in preparing construction project specifications from the master guide specifications. The use of SpecsIntact is mandatory. SpecsIntact is distributed on CCB, TECHINFO (Internet address in paragraph above), and the SpecsIntact Internet Home Page at http://si.ksc.nasa.gov/SpecsIntactt/.

1.4 **WordSpec** is a MS Word Macro which makes SpecsIntact documents compatible with MS Word. It gives SpecsIntact users the ability to edit their job specifications in Word. Specification section files created with WordSpec need to be uploaded into SpecIntac to produce the submittal register, table of contents, and other reports. WordSpec software can

be downloaded from the Internet through the SpecsIntact Internet Home Page (Internet address in paragraph above).

1.5 **ENG Form 4288 "Submittal Register."** This document identifies the shop drawings, continuation of design analysis, equipment specifications, and samples that the Construction Contractor will have to submit to the Government to assure that those items comply with the contract specifications. Items shall be classified for Government Approval (GA) or For Information Only (FIO). Use SpecsIntact software to prepare the Submittal Register.

1.6 **Never use CEGS or old specs** that are available from past work because these specs will be out of date. Most of the guides are updated frequently. When available, the District will furnish guide specs for items not covered by the CEGS. When neither CEGS or other guide specs are available, the AE shall prepare complete specs for the item which shall be consistent in all respects to the CEGS format.

1.7 **Compliance with the Buy American Act (BAA) is mandatory**. The BAA generally requires the use of construction materials and equipment from domestic sources in Government contracts less than $6,500,000. Above $6,500,000. Mexico and Canada are approved sources by the North American Free Trade Agreement (NAFTA). Above $7,311,000.00, there are other countries that are covered by the Trade Agreements Act. If materials and equipment are required which cannot be obtained from approved sources, the AE shall notify the TL early in the design phase and provide a market analysis and justification to the TL to obtain a waiver to the BAA.

2. **SUBMITTAL REQUIREMENTS**. In addition to the following, see AEIM Chapter XI for specification submittal requirements.

2.1 **Project Definition/Project Engineering/Concept Submittal (10% to 30%)**: The AE marks up an index of the CEGS to indicate which CEGS are applicable to the contract and includes with the Project Definition/Project Engineering/Concept design analysis submittal.

2.2 **Preliminary Design (60%) Submittal/Final Submittal**: The AE provides this submittal to the TL on 3.5 inch disks in the SpecsIntact word processing software and in hard copy, quantity as determined by the TL. Do not submit "straight" MS Word sections as these are not compatible with the SpecsIntact system. The AE obtains copies of the current editions of CEGS required for this design contract and coordinates with the TL to incorporate any local supplements to each particular section. Carefully check the CEGS list for compliance with the project requirements and the Project Definition/Project Engineering/Concept plan, as applicable, and all annotated comments to these submittals. This submittal shall include a table of contents of Divisions 2 through 16. Edited, working specification sections of Divisions 2 through 16 showing proposed deleted text and proposed text additions highlighted, submittal registers, and bidding schedule, produced by SPECINTAC shall be included. Division 0, “Bidding Requirements,” and Division 1 “General Requirements” will be furnished to the AE by the district Technical Leader and be included in the specifications submitted.

2.3 **Corrected Final Submittal (100%)**: The AE provides these submittals to the TL on 3.5 inch disks. in the word-processing software specified by the supervising Corps District and in hard copy, quantity as determined by the TL. Printed copies shall include a submittal register at the end of each section. The disks shall include a separate directory containing all of the submittal registers (SR) for use by the Construction Contractor and project office after award of the construction contract. If files on the disks are in compressed format, provide the exploding program on the disk with the files. This submittal shall include, ready for publishing without further editing, a table of contents of Divisions 2 through 16, Divisions 2 through 16 sections with all highlighting removed and inapplicable text deleted, technical review comments incorporated, submittal registers, and bidding schedule. The District prepares Divisions 0 and 1 sections. The AE contract Scope of Work will either make the AE responsible for combining the sections the final table of contents, and cover, or if this will be done by the district.

2.4 **Electronic Bid Set.** The Corps of Engineers is required to post their bid solicitations on the Army Single Face to

Industry web site. When required by the contract Scope of Work, the AE provides the final specifications (and drawings) on CD-ROM. Specifications will be converted to Adobe .pdf file format before placing them on the CD-ROM.

3. **ORGANIZATION OF CONTRACT SPECIFICATIONS**.

3.1 **Organize the contract specs per the Construction Specifications Institute (CSI) format**. The CSI format standardizes the sections of the technical specs into 16 divisions. CEGS guide specifications have been assigned five-digit section numbers in accordance with the CSI master format. Assign sections based on other than CEGS, and specially developed sections the most applicable CSI division and section numbers per the CSI's master format.

3.2 **Table of Contents.** All Divisions (1 through 16), including their respective number and division title, shall always be listed in the Table of Contents. Divisions that do not have sections shall have "(NONE IN THIS JOB)" noted after the Division title.

3.3 **Specification Section Number.** Identify each specification section by its CEGS or CSI five-digit identification number. Arrange the sections within their respective divisions in numerical order.

3.4 **Specification Format.** Specification sections and paragraphs shall utilize the CSI three-part format (General, Products, Execution). Number the paragraphs using the CEGS number/period paragraph identification system. Do not prefix the section number to the paragraph numbers. Keep the number of paragraph levels to four. The numbering system is illustrated below:

Number/Period System

Part 2 - Products
2.1
2.1.1
2.1.1.1
2.1.1.2
2.1.2
2.1.3
2.2

4. **EDITING GUIDES**. Up-to-date prints of contract drawings must be available to the specification writer while editing the guide specifications. The specification writer shall make a thorough study of the contract drawings.

4.1 **Prepare and submit the final and corrected final** project specifications per the District Office supplemental instructions and Chapter XI of this manual. Include a Submittal Register listing the submittal requirements for each specification section in the project with both the final and corrected final submittals in accordance with ER 415-1-10, Contractor Submittal Procedures, and the District's requirements.

4.2 **General and additional notes** are found in CEGS-01000, CEGS general notes, and within and at the back of each CEGS which will clarify and provide instructions on editing the guide. Strictly follow these instructions. Delete the indexes of individual guides and all notes from the corrected final submittal.

4.3 **Deviations for CEGS**.

4.3.1 Tailor the CEGS to fit the specific project under design. Only authorized deviations as defined in ER 1110-1-8155 are permitted.

4.3.2 Deviations shall not (a) permit the use of products involving hazards to life or property, (b) reduce competition by eliminating options which have been recognized by USACE as acceptable, © violate requirements established by legal precedence, or (d) lead to higher life cycle cost by increasing future maintenance cost, etc.

4.4 **Carefully edit the CEGS** to fit the actual conditions of the design shown on the drawings. Add additional paragraphs as required to cover all features of the work. Delete all inapplicable portions of the guides. Phraseology of the CEGS should not be changed unless it is clearly evident that such changes must be made to obtain the results desired. The final draft shall completely cover the work to be done and will not contain extraneous material. Carefully coordinate each spec section with the drawings and with all related sections so that there is no duplication, overlapping, conflicting, or ambiguous statements.

4.5 **Contract specs** shall include all optional products and materials contained in the CEGS except where deletions are authorized in the guide specification notes or by ER 1110-1-8155. Contracting without providing for full and open competition is a violation of statute, unless permitted by authorities contained in the Federal Acquisition Regulations. Regulations prohibit inclusion of additional optional materials; prohibit the use of proprietary or sole source materials, systems, and processes to the exclusion of other materials, systems, and processes; and prohibit the use of unproved methods or materials without prior justification and approval. The A-E should request assistance from the district Technical Manager if other than open competition is to be used.

4.6 **Federal Specs and MIL Specs** have been phased out with a few exceptions. Only those Federal and MIL specs in the current editions of the CEGS may be used. Industry standards (ASTM, ANSI, UL) should be used to the greatest extent practicable for description of materials. When there is no standard spec, if possible specify items by a performance description. Use trade names only when absolutely necessary and then only when the product's salient physical, functional, or other characteristics are included in the spec. Always use the words "or approved equal" in connection with trade names.

4.6.1 Type, Grade, Class. Material, equipment, and/or end items based on Federal Specs, ASTM or other industry standards, or other agency standards shall be identified by type, grade, class, etc., as applicable. A reference to a particular publication is usually insufficient.

4.7 **Reference shall not be made to the CEGS** (such as: "shall conform to CEGS-08201") in the contract specs. The CEGS are used only for writing contract specs and are not available to suppliers and contractors. CEGS are guides, not Standard Specs, even though one of the purposes of these guides is to standardize requirements.

4.8 **Reference to Third Party**. Avoid references to a third party. The "Contractor" and the "Contracting Officer" are the only contracting parties in a contract. The terms "Contractor" and "Contracting Officer," and in certain instances, "Government," shall be used in the contract

specs. Make reference to work done "by others" only when that work is not a part of the contract and will be done under another contract. Do not use References to third parties, such as "Air Installations Officer," "Post Engineer," "Architect-Engineer," "Sub-contractor," and "Engineer" in the contract specs.

4.9 **Cross References.** Do not cross reference to other paragraphs by paragraph number. Make reference by paragraph titles to prevent erroneous references due to renumbering.

4.10 **References to Drawings**. The specification writer must check drawings to insure that features associated with phrases as "as shown on the drawings", "as indicated" or "as otherwise detailed", etc., are actually shown. If the information is not on the drawings, coordinate with the appropriate technical design specialist to resolve the discrepancy. Use of the search capabilities of the word processing software to assist in locating these phrases within CEGS is recommended.

4.11 **Conflicts**. Drawing notes and details that conflict with the specifications shall be corrected or deleted. Sizes, thickness, spacing, etc., must agree with the specifications. The CEGS reflect the most current design and detail criteria except for those items for which specific engineering instructions are furnished, in which case, the latter will prevail and the guide shall be altered accordingly. When preparing a color schedule, take particular care to assure that any item listed by brand name complies with the technical requirements of the appropriate specification section.

4.12 **Terminology**. Terminology used on drawings must match that used in the CEGS. The specification requirements may not be binding if terms used therein do not coincide with those on the drawings.

4.13 **Use of "shall," "will," "may," and "should".** For mandatory requirements in the specifications use "The Contractor shall." For requirements to be fulfilled by the government use "The Government will." Use "may" to allow an option. Never use "should" in the specifications.

4.14 **Use of the phrase "Not Used."** This phrase is normally utilized as a labor and time saving device. It may be used sparingly in the editing of specifications to continue an existing numbering system to eliminate excessive renumbering of subsequent paragraphs and subparagraphs whenever one or two isolated paragraphs within a text are deleted. Do not use "not used" to account for all unused guide specification paragraphs. Whenever several consecutive or near-consecutive paragraphs are deleted, renumber the remaining paragraphs. Also do not end sections or paragraphs with "Not Used" subparagraphs.

4.15 **A-E Developed Specification Sections**. For items not covered by the CEGS or district guide specifications, create new sections using the SpecsIntact ARMYSECT template. Edit the section template using the Editor. Refer to the CEGS guide specifications CEGS-01010 CEGS Organization Guidance and CEGS-01020 CEGS TEMPLATE for format guidance.

4.16 **Amendment Changes.** Changes to any specification section during the time that the Plans and Specifications is out for bids will result in the entire section being reissued, with the amendment changes underlined and the amendment number inserted at the beginning of the change (AM#____). Each reissued section will have a header on every page giving the amendment number and solicitation number (ACCOMPANYING AMMENDMENT NO _____ TO SOLICITATION NO). Deleted paragraphs will have the word DELETED next to the paragraph number with the text gone. Deleted sentences shall be replaced by an Amendment number (AM# ____) followed by a blank line with a period.

5. **BIDDING SCHEDULE**. Submit a bidding schedule with the final and corrected final specs with the bid amounts left blank (except for the bid items for O & M manuals and final as-build drawings) with all applicable notes included. For bidding schedule content and format, refer to local District Cost Engineering Supplements for instructions.

6. **GOVERNMENT FURNISHED EQUIPMENT OR MATERIALS (GFE)**. This includes items to be furnished by the Government and installed by the Contractor. The General Requirements prepared by the District Office includes the entire list of Government-furnished, Contractor-installed items for the contract and includes all information needed by the

prospective bidder to determine the cost of handling and installing the GFE. Such information shall be furnished by the AE and should include the quantity of each item to be furnished by the Government; manufacturer's name and model number, size, weight, source (i.e., from storage at project site, f.o.b. railroad cars, or f.o.b. truck); whether the district office needs to requisition the items; and other pertinent data. Items of installed material or equipment to be relocated from one area or building to another are not considered Government-furnished property and the listing of such items in the General Requirements is not required.

7. **INSTRUCTIONS FOR PRINTING SPECIFICATIONS**.

7.1 **SpecsIntact format** Corrected Final specifications shall be converted to Adobe .pdf format files. Hard copies of the specifications shall be printed from .pdf files.

7.2 **Reproduction Quality.** The AE shall check the final printed copies for reproduction quality before submitting to the district office.

CHAPTER VIII

DRAWINGS

Table of Contents

1. PURPOSE AND SCOPE

2. REFERENCES

3. CADD OPERATING PROCEDURES
   3.1 CADD Software
   3.2 CADD Standards
   3.3 Graphic Files
      3.3.1 Drawing CADD Files
      3.3.2 File Naming Convention
      3.3.3 CADD Conventions
      3.3.4 Drawing Size
      3.3.5 Title Blocks/Borders
      3.3.6 Units
      3.3.7 Scale
      3.3.8 Numbering
      3.3.9 Drawing Seals and Signatures
      3.3.10 Amendments to Drawings
      3.3.11 Construction Modifications
      3.3.12 Drawing Submittal Media

4. TYPES OF DRAWINGS
   4.1 Budget Type Drawings
   4.2 DA Standard Designs/Drawings
   4.3 Site Adapted Drawings
   4.4 Standard Drawings
      4.4.1 Field Standards
      4.4.2 Regional Standards
      4.4.3 HQUSACE Standards
   4.5 Project Drawings
      4.5.1 Schematics/Sketches
      4.5.2 Army Project Engineering and Air Force Project Definition
      4.5.3 Army Concept
      4.5.4 Final & Corrected Final Drawings
      4.5.5 Demolition Drawings
      4.5.6 As-Built Plans

Table of Contents (cont).

5. FORMAT OF PLANS
    5.1 Arrangement of Drawings
    5.2 Separate Drawings
    5.3 Cover Sheet
    5.4 Index of Drawings
    5.5 Project Vicinity, Location and Haul Route
    5.6 Legends and Symbols

6. DRAWING STANDARDS
    6.1 Scale
    6.2 Lettering
    6.3 Sheet Numbers
    6.4 North Arrows
    6.5 Titles
    6.6 Section and Detail Cross Reference
    6.7 Photographs
    6.8 Dimensions/Grid
    6.9 Finished Drawings/Checking
    6.10 Reproduction Process
    6.11 Electronic Bid Set

7. PROJECT DRAWING DATA
    7.1 Project Site Plans
    7.2 Floor Plans
    7.3 Fire Protection Plans
    7.4 Room Finish/Color Schedules
        7.4.1 Interior Schedules
        7.4.2 Exterior Schedules
    7.5 Elevations
    7.6 Longitudinal and Cross-Sections
    7.7 Wall Sections
    7.8 Doors
        7.8.1 Door Schedules
    7.9 Windows and Schedules
    7.10 Roof Plans
    7.11 Ceiling Plans
    7.12 Sections and Details
    7.13 Equipment Schedules

8. AMENDMENTS AND MODIFICATIONS

Appendix A - Plates

Chapter VIII

DRAWINGS

1. **PURPOSE AND SCOPE**. This guidance establishes uniform drawing standards for Architect-Engineers (A-E), design-build contractors and Government personnel preparing design, engineering and construction documents, other than shop drawings, pursuant to a contract with Districts in the Southwestern Division. These standards are to facilitate preparation, review and a clear understanding of the contract documents.

2. **REFERENCES:**

2.1 ER 1110-345-700 Engineering and Design, Design Analysis, Drawings and Specifications, Appendix C, - Drawings.

2.2 A/E/C CADD Standards Manual (current edition). A copy of the standards can be downloaded from the Internet at the Waterways Experiment Station (CEWES), CADD/GIS Technology Center (http://tsc.wes.army.mil). A CD ROM disk with the manual and other CADD system data can be ordered at the same Internet address or can be obtained from the CADD/GIS Technology Center (CEWES-ID-C), 3909 Halls Ferry Road, Vicksburg, MS 39180-6199.

3. **CADD OPERATING PROCEDURES.** All original and finished drawings will be produced using Computer-Aided Design and Drafting (CADD). Existing hard copy data to be included in construction projects shall be scanned to raster format (minimum, vector preferred) and submitted with all required electronic files.

3.1 **CADD Software.** The basic software package used to create contract drawings shall be Bently Inc.'s, MicroStation® or Autodesk's AutoCad®, as specified by the supervising district. Manually drawn sketches may be used for schematic and preliminary studies.

3.2 **CADD Standards.** The A/E/C CADD Standards Manual was developed by the CADD/GIS Technology Center to reduce redundant CADD standardization efforts within the Army, Navy, Air Force, and Corps of Engineers. The manual consolidates various CADD standards used in the Corps of Engineers into a generic format to operate under various CADD software

packages (such as MicroStation and AutoCAD) and to incorporate existing industry and national standards.

3.3 **Graphic Files.**

3.3.1 Drawing CADD Files. Each graphic file should contain the contents of only one drawing (sequence numbered sheet). The architectural floor plan, site master plan, mechanical master plan, electrical master plan, etc. will each be constructed in a separate CADD file. These plans will not be split between two or more CADD files. Designers will use these floor plans/master plans as reference files and not copy them into their sheet design file. This will facilitate the incorporation of plan changes.

3.3.2 File Naming Convention. File names shall be as indicated in the A/E/C CADD standard and/or supervising district standard. The Architect-Engineer should obtain the file naming convention to be used for a particular contract from the district's project Technical Leader.

3.3.3 CADD Conventions. Architect-Engineer will use the CADD level/layer convention, line symbologies, font libraries, and color tables as indicated in the A/E/C CADD standard or as required by the project’s supervising district. The Architect-Engineer should obtain the CADD conventions to be used for a particular contract from the district's project Technical Leader.

3.3.4 Drawing Size. Drawing sizes shall be as indicated in the A/E/C CADD standard and/or supervising district CADD standards. Sketches or reduced size drawings for design brochures should be copying size 215mm x 280 mm (8-1/2"x 11") or 280 mm x 430 mm (11"x17").

3.3.5 Title Blocks/Borders. Standard CADD title blocks and border files for contract documents shall be furnished to the A-E by the district project Technical Leader in the supervising district.

3.3.6 Units. Unless otherwise directed, drawings shall use the metric International System of Units (SI). See paragraphs 2 and 3.2.1 of Chapter I for guidance on metric design policy and application. Additions/modifications to existing facilities may be in the English system of units to

match the units used in the original facility construction if directed by the supervising district.

3.3.7 Scale. Appropriate scales shall be used to produce clearly legible drawing and shall conform to the A/E/C CADD standard and/or supervising district. See paragraph 6.1 for conventional scale standards.

3.3.8 Numbering. Sheet numbers, sequence numbers, and CADD file names shall be as indicated in the A/E/C CADD standard and/or supervising district standards. All design submittals require sheet numbers. See paragraph 6.2 below. Final design and all subsequent design submittals also require sequence numbers. The CADD file name and plot date should be shown outside the border under the title block on all drawings.

3.3.9 Drawing Seals and Signatures. Architect-Engineer designed drawings should each be sealed, signed, and dated by the responsible designer. Electronic duplications of seals are acceptable. However, original, handwritten signatures on plotted record drawings are required.

3.3.10 Amendments to Drawings. Architect-Engineer shall make amendment revisions to the most recent CADD drawings contents and title block. Unless other procedures established by the supervising district are furnished to the A-E, the following procedure shall be followed. Before any solicitation CADD file is amended, a copy of the CADD file or files that make up the drawing shall be saved with a .ORS (original solicitation) extension. In the lower right-hand corner below the title block insert “SUPERSEDED BY (new sheet no.).” Then the original CADD file shall be revised to include the amendment and the file saved as filename.ann where filename is the root name and nn is the amendment number. Amendment numbers should be coordinated with the district project Technical Leader. Circle each of the areas of change for this amendment on the drawing with a dashed line and remove the dashed lines for any previous amendment to that drawing. Place a triangle inside the circled area on the drawing with the assigned lower case change letter (a,b,c) inside the triangle. Place a number outside the triangle in ascending order for each area that has been encircled. The revision block shall contain the date of revision, amendment number (AM000?) and a brief description of the changes on the drawing along with a triangle containing the change letter and number outside to indicate

the number of circled areas. Successive revisions shall be shown progressing upward in the revision block and use ascending change letters (a, then b, then c, etc). The sheet number and sequence number shall be changed by adding a point number. The point number shall be in ascending order depending on the number of amendments to that drawing (sheet number.1 and sequence number.1, then sheet number.2 and sequence number.2, etc). An added drawing shall be indicated as “New Drawing” and deleted drawings shall be indicated as “DELETED FROM CONTRACT” in the revision block. The Drawing Index will reflect the new drawings added and deleted drawings. The amended CADD files shall be submitted to the district in the media required by the A-E Contract.

3.3.11 Construction Modifications. The Architect-Engineer will be requested to make construction modifications by the district project Technical Leader. Modifications will be posted using procedures, similar to the amendment posting procedures described above, established by the supervising district on the latest version of the CADD design files. Unless other procedures established by the supervising district are furnished to the A-E, the following procedure shall be followed. Before any contract drawing CADD file is modified, a copy of the CADD file or files that make up the drawing shall be saved with a .ORG (original contract) extension. In the lower right-hand corner below the title block insert “SUPERSEDED BY (new sheet no.).” Then the original CADD file shall be revised to include the modification and the file saved as filename.mnn where filename is the root name and nn is the modification number. Modification, DO, and file extension numbers will be furnished by the district project Technical Leader. The revision block shall contain the date of revision, modification number (DO000?) and a brief description of the changes on the drawing along with a triangle containing the change number (1,2,3, etc). The sheet number and sequence number shall be changed by adding a point number. The point number shall be in ascending order depending on the number of amendments and modifications to that drawing (sheetnumber.1 and sequence number.1, then sheetnumber.2 and sequence number.2). Modified CADD files shall be submitted to the district Technical Leader in the media required by the AE Contract.

3.3.12 Drawing Submittal Media. The supervising district shall establish the appropriate media and number of copies

for submission of final drawings, and for other required submittals and include these requirements in the A-E Contract. These may be CADD files in .dgn or .dwg format, CAL files, CD-ROM with drawing files (and specifications), and full size or half-size hard copy drawings. If required by contract hard copy Vellum drawings, plotted from CAL files. Each submittal of CADD files shall contain an EXCEL spreadsheet containing the drawing number, sequence number, level/layer assignments, line colors, line weights, line types and any other workspace settings used for every drawing.

4. TYPES OF DRAWINGS

4.1 **Budget Type Sketches/Drawings** are single-line diagrams for estimating costs and programming projects. These drawings are normally reduced for presentation in 216 mm x 279 mm (8 1/2" x 11") Project Engineering (PE), Project Development Brochures (PDB), Army or Requirements and Management Plan (RAMP), Air Force. Minimum size lettering will therefore be equal to 12 point type size after reproduction. Functional data, controlling dimensions and gross area will be shown.

4.2 **DA Standard Designs/Drawings** essentially consist of standard floor plans, typical building sections and special site requirements, without any detailed design developed. Designs are at about the 10% stage. These designs where developed in accordance with ER 15-1-25. Standard design packages are available for about 13 different Army facilities with about 15 others under development. Use of these standards for Army projects is mandatory and will be required by the DD 1391 form. Standards are available through the Internet at http://cadib.wes.army.mil/html/cos/cfusion/MainPage.htm Drawings in these packages are CADD MicroStation files. Deviations from these standards are not permitted without waiver approval.

4.3 **Site-Adapted Drawings** are plans from a prior project. The level of implementation will be technically coordinated by district staffs. Typically site-adapted plans will be reviewed by each design discipline for updating to current criteria for the specific construction site. Site-adapted drawing title blocks shall be changed by deleting the original AE name and seal, replacing the project name with

the current project name, deleting all amendment and modification notations and symbols throughout the drawing, and adding a note above the title block indicating the project from which the drawing has been site adapted.

4.4 **Standard Drawings** Standard drawings are fully developed plans and complete details for use in repeated locations or for site adaptation as follows:

4.4.1 Field Standards are District or local standards derived from prior projects.

4.4.2 Regional Standards are Division or uniform criteria standards established for regional, climatic and other environmental design conditions. Plates at the end of chapters in this AEIM are regional standards. Supervising districts may have additional standards. The AE should request a list of Standard Detail files available in MicroStation® or AutoCad® format, from the district project Technical Leader.

4.4.3 HQUSACE Standards are national standards. These documents which are to be utilized as completely as practicable for project design conditions. Analyses of foundations, structural and mechanical systems are normally authorized to site adapt the drawings. Revisions and deviations beyond these shall be reported and submitted for approval through the Technical Leader in the supervising district, to CESWD-ETEC-T to HQUSACE.

4.5 **Project Drawings** are developed for actual construction at an individual site. They may be site-adaptations of standard plans or new and original design document submittals as follows;

4.5.1 Schematics/Sketches are single-line drawings to scale representing 5-10% project design development. They include but are not limited to basic site plan (including orientation and contours), floor plan (with overall dimensions), gross area, two elevations and a section.

4.5.2 Army Project Engineering and Air Force Project Definition are double-line drawings to scale, with dimensions, representing 10-30% (actual % as specified by contract Scope of Work) project design development. They include but are not limited to a site plan showing proposed

buildings, roads, parking, etc., utilities layout for electrical, gas, water, steam, etc., floor plan(s) showing functional space arrangements, building elevations, and sections to identify exterior wall system and architectural style, sections to show type of floor and roof structure, single line ductwork layout, mechanical room layout.

4.5.3 Army Concept are double-line drawings to scale with control dimensions representing 25-35% project design development. Comprehensive basic layouts with net areas and equipment are required for each design discipline. A preliminary fire protection plan, elevations, cross-section and typical wall section are required.

4.5.4 Final and Corrected Final Drawings are complete civil, architectural, structural, mechanical and electrical drawings including all building components, controlling dimensions, sections and details for efficient execution of construction. Drawings will be independently checked and thoroughly coordinated with specifications terminology for accurate take-off and competitive bidding by contractors.

4.5.5 Demolition Drawings will show all of the existing construction to be changed or removed. Notes, dimensions and details will be explicit for accurate sizing, take-off of quantities and estimating. Provide a schedule identifying characteristics of mechanical/electrical equipment to be removed or relocated.

4.5.6 As-Built Plans are completed sets of drawings with all attendant changes, modifications and details of construction as built and installed. Sets of As-Built Plans of will be furnished as required to the using agency for future reference, maintenance and construction on the facility. A Master set of CADD files of the project drawing records will be retained at the District for a period of 5 years and then sent to the using agency.

5. **FORMAT OF PLANS** The number of drawings will vary according to the scope and requirements of each project. Experience has shown that following the guidance below results in clear construction contract documents.

5.1 **Arrangement of drawings** will be as shown on plate D1 of Appendix A.

5.2 **Separate Drawings.** Typically to avoid congestion, provide separate drawings as listed below.

5.2.1 Project Site Plan(S) Project site plans are typically provided in civil drawings, in demolition plans, for exterior utilities, etc.

5.2.2 Demolition Plans (buildings, paving, utilities, etc.)

5.2.3 Grading, Paving and Drainage Plans

5.2.4 Exterior Utilities (water, sewer, gas, etc.)

5.2.5 Exterior Electrical Utilities (power distribution)

5.2.6 Plumbing

5.2.7 HVAC

5.2.8 Lighting System

5.2.9 Power System

5.2.10 Communications, Signaling, and other special systems (e.g., telephone, fire alarm, intercom,)

5.2.11 Fire Protection Plan

5.3 **Cover Sheet.** Each set of plans or volume in a set of plans should have a cover sheet. Cover sheets contain the base name, official title of the project, volume number when there are multiple volumes in a set, Corps Of Engineers logo, name of district responsible for the preparation of the contract plans, solicitation number and issue date, and after award of the contract for construction the contract number. The A-E should obtain the format for the sheet from the district project Technical Leader. Solicitation and contract numbers will be assigned by the district.

5.4 **Index of Drawings** may be a separate sheet, sheet for each volume of the plans, or for small projects combined with the project location sheet. Place the index of drawings behind the cover sheet. Arrange so that additional numbers can be added in each technical discipline.

5.5 **Project Vicinity, Location and Haul Route.** A vicinity map and base layout map to be used for project location and the haul route will be furnished by the supervising Corps district. This information should be included on a separate sheet following the index sheet.

5.6 **Legends and symbols** will be complete and concise for the project design. District standard symbols will be used to depict all work items on boring logs, civil drawings, architectural drawings, mechanical drawings, electrical drawings, and landscaping. AIA standards may also be utilized. The ampersand (&) will not be used in sentences and schedules. Additional symbols may be used by the design agent to correlate project drawings by discipline. A consolidated legend/symbol sheet for the entire project may be provided or separate legend/symbol on discipline drawings may be provided.

6. DRAWING STANDARDS

6.1 **Scale** for all drawings and delineation will permit complete legibility. A graphic bar or checkerboard scale will be provided on each sheet near the lower left hand corner of the sheet. Conventional scale standards are as follows:

Site Plans (Buildings)	No smaller than 1:200
Floor Plans*	1:50 to 1:100
Roof Plan	1:100
Exterior Elevations	1:100
Interior Elevations	1:50
Cross Sections	1:50 to 1:100
Wall Sections	1:20
Stair Details	1:20
Details	1:5 or 1:10

* A minimum scale of 1:50 is required for family housing, medical centers and all areas of congestion such as mechanical rooms, restrooms, kitchens etc.

6.2 **Lettering**. Computer lettering will be in the font and line weight standard used by the district. Lettering will not

be less than "this type-size", after reduction, for any reduced presentation.

6.3 **Sheet Numbers** will be indexed and assembled by disciplinary group in the set of drawings. Unless otherwise approved by the design district, the sheet number should consist of a capital alphabetical letter representing the discipline followed by a number indicating its sequence in the discipline group. The designations for the disciplines are C for civil/site, A for architectural, S for structural, M for mechanical, E for electrical, BL for boring location and log of borings, L for turfing and landscaping.

6.4 **North Arrows** will be placed on the plan sheets for each discipline. The north arrow will be on the key plan if used and oriented to the top of the sheet where practicable. The true meridian and magnetic declination will be shown on all maps. When a coordinate system is used for civil drawings, grid north will be shown.

6.5 **Titles** must be used to identify the view and also what the view is representing; SITE PLAN, PIPING PLAN, FLOOR PLAN, NORTH ELEVATION, WINDOW JAMB DETAIL, CROSS SECTION A-A, etc.

6.6 **Section and Detail Cross References** should follow the sheet number where cut/sheet number where shown convention shown on plate D2 in Appendix A unless otherwise approved by the district. Section and cross reference standard symbols, should typically have a title to provide sufficient identification to clarify location of the sections/details, such as JOINT DETAIL, ELECTRICAL PANEL ELEVATION, etc. The title may have more than one line and may have subtitles and explanatory notes.

6.7 **Photographs** may be used to better illustrate existing conditions. Photos used for modification work or maintenance work should use pencil changes and dimensions drawn on the photos with clarifying notes. Photos should be not less than 100 mm x 125 mm (4" x 5") and not larger than 200 mm x 250 mm (8" x 10"). When appropriate graphic scales should be included so the dimensions can be scaled.

6.8 **Dimensions/Grid** will be carefully checked and coordinated between disciplines for accuracy. Plan dimensions for wall frame construction will be to face of stud and to centerline of openings. Masonry construction

dimensions will be to nominal face of masonry and to jambs of openings. Modular design will be used for all masonry and dimensions will be in increments of 10 mm to reduce on-site cutting for hard metric masonry units. Control dimensions will be to the same points on architectural and structural drawings. Where columns occur, a dimensional grid system will be set to column centerlines.

6.9 **Finished Drawings/Checking**. All drawings submitted will be marked to their submittal level (i.e. Advance Final, Final, etc.). The medium for submission shall be in the contract documents or established by the district project Technical Leader. Notes and terminology will be consistent with guide specifications. General notes will be grouped and special notes will provide specific reference, i.e. See Structural Dwg.S-1. "By Others" should not be used. Work shown, but not existing and not in the construction contract, will be designated as NIC (not in contract). Sectioning, cross-referencing and general titling guidance are as shown on plate D2 of Appendix A in this chapter. Detailing should be consistent with stock materials and standard construction practices. Details should provide thorough and unambiguous guidance for basic materials of construction. Details for options should be consistent with reasonable selections from the guide specifications for project design conditions.

6.10 **Reproduction Process**. Specific requirements for the reproduction process to be used for each project will be furnished by the supervising district. See paragraph 3.3.12 above.

6.11 **Electronic Bid Set.** When required by the contract Scope of Work, the AE shall provide the final drawings (and specifications) on CD-ROM. Drawings will be converted to CAL file format before placing them on the CD-ROM. Digital files for use on the Electronic Bid Set CD's shall be furnished as directed by the supervising district.

7. **PROJECT DRAWING DATA** See Civil Chapter II, Architectural Chapter III, Structural Chapter IV, Mechanical Chapter V, Electrical Chapter VI, and Part 2, Chapters 1 through 8 in Design Analysis Chapter IX for requirements in addition to the following:

7.1 **Project Site Plans** will show north arrow, existing contours, existing and adjacent facilities, topographic

features and utilities interface for complete interdisciplinary coordination of the proposed site design.

7.2 **Floor Plans** will show complete horizontal controlling dimensions and civil/site interface. Reference all section cut lines on plan to the appropriate sheet where the section is shown. Built-in, installed and portable equipment will be indicated to scale. For major items of mechanical/electrical equipment, use the larger of three manufacturers equipment sizes for space requirements.

7.3 **Fire Protection Plans** will be provided for Army project engineering, Air Force Project Definition, Concept, Final and Corrected Final submittals. Plans will indicate hazards, clearances, rated wall systems, fire exits and distances. Gross floor areas will be listed for each floor and for the building.

7.4 **Room Finish/Color Schedules** will be provided on (or follow) the floor plan sheet, be complete for each wall orientation and consistent with fire protection plan ratings, interior design finishes and project specifications terminology. All spaces in the schedules will be filled in. Where surfaces have no finish, the word "none" will be used. Ditto marks will not be used.

7.4.1 Interior Finish Schedules will cover all built-in items requiring finish including cabinets, counter tops, acoustical materials and mechanical/electrical equipment exposed to view. Schedules will stipulate surfaces to receive paint by type and texture and the specifications will be coordinated therefore.

7.4.2 Exterior Finish Schedule will include the finish and texture for all exterior materials exposed to view. Exterior metal work such as doors, windows and metal fascia will be compatible.

7.5 **Elevations** will show all visible elements including adaptation to finish grade, story heights, fenestration and mechanical/electrical equipment and screening of appearance distractions. Indicate rustication, control, construction and expansion joints and coordinate with structural drawings.

7.6 **Longitudinal and Cross-Sections** will be taken to show all building framing sub-assemblies and suspension systems.

7.7 **Wall Sections** will show comprehensive variances in construction with complete vertical dimensions. Sections will be structurally coordinated for:

7.7.1 Foundation and finish grade conditions.

7.7.2 Size and spacing of horizontal and vertical reinforcement and masonry ties

7.7.3 Control joint placement and details

7.7.4 Suspension and furring assemblies including wind up-lift and seismic bracing details.

7.8 **Doors** will be drawn to scale, each with a separate number and door swing shown in plan. Door elevations and details will show transoms, sidelights, glazing and louvers. Doors will be numbered consecutively and counter-clockwise in plan as follows:

Basement ------- 01 through 99
1st Floor ----- 101 through 199
2nd Floor ----- 201 through 299
etc.

7.8.1 Door Schedules will list each door by separate number and segregate by type, material, fire rating, hardware, threshold and detail references. Schedules will be coordinated with fire protection plans, security criteria, and specifications. Each frame type will be identified by double letters (AA, BB, CC etc.)

7.9 **Windows and Schedules** will include all the various types and options used with references to head, jamb and sill details. Each window type will be designated by "W" and number (W-1, W-2, etc.). Window details should be coordinated with energy conservation fenestration and solar shading.

7.10 **Roof Plans** will show all access, slopes, drainage flow, scuppers, roof mounted equipment, walkways, and skylighting. Provide references for all flashing details, horizontal joints, intersections, and penetrations. When built-up roof systems are used, detail uniform shaped penetrations with

clamped bell-flashing and non-uniform shaped penetrations with pitch pockets.

7.11 **Ceiling Plans** will show all special architectural features and mechanical/electrical fixtures and will be coordinated with fire rated assemblies and sprinkler system.

7.12 **Sections and Details**. Cuts will be comprehensive for construction and identified with correct number and sheet to accurately show dimensions, type and extent of materials.

7.13 **Equipment Schedules** will list identification nomenclature for each piece of equipment, stating size, mounting provisions, utility service and capacity requirements. Additionally denote Government Furnished/Contractor-Installed equipment and all Government-Furnished and Installed equipment. Medical and laboratory equipment schedules will be as specifically directed for the project.

8. **AMENDMENTS AND MODIFICATIONS**. Revisions to drawings will meet the drafting standards used in the development of Final Plans for uniformity. The district project Technical Leader will coordinate between the Corps of Engineers Construction representative and A-E and furnish direction therefore. See paragraphs 3.3.10 and 3.3.11 of this chapter for additional guidance.

APPENDIX A

CHAPTER VIII

INDEX OF PLATES

Plate No.	Title
D1	Standard Arrangement Of Drawings
D2	Elevation, Section & Detail Cross-References

STANDARD ARRANGEMENT OF DRAWINGS

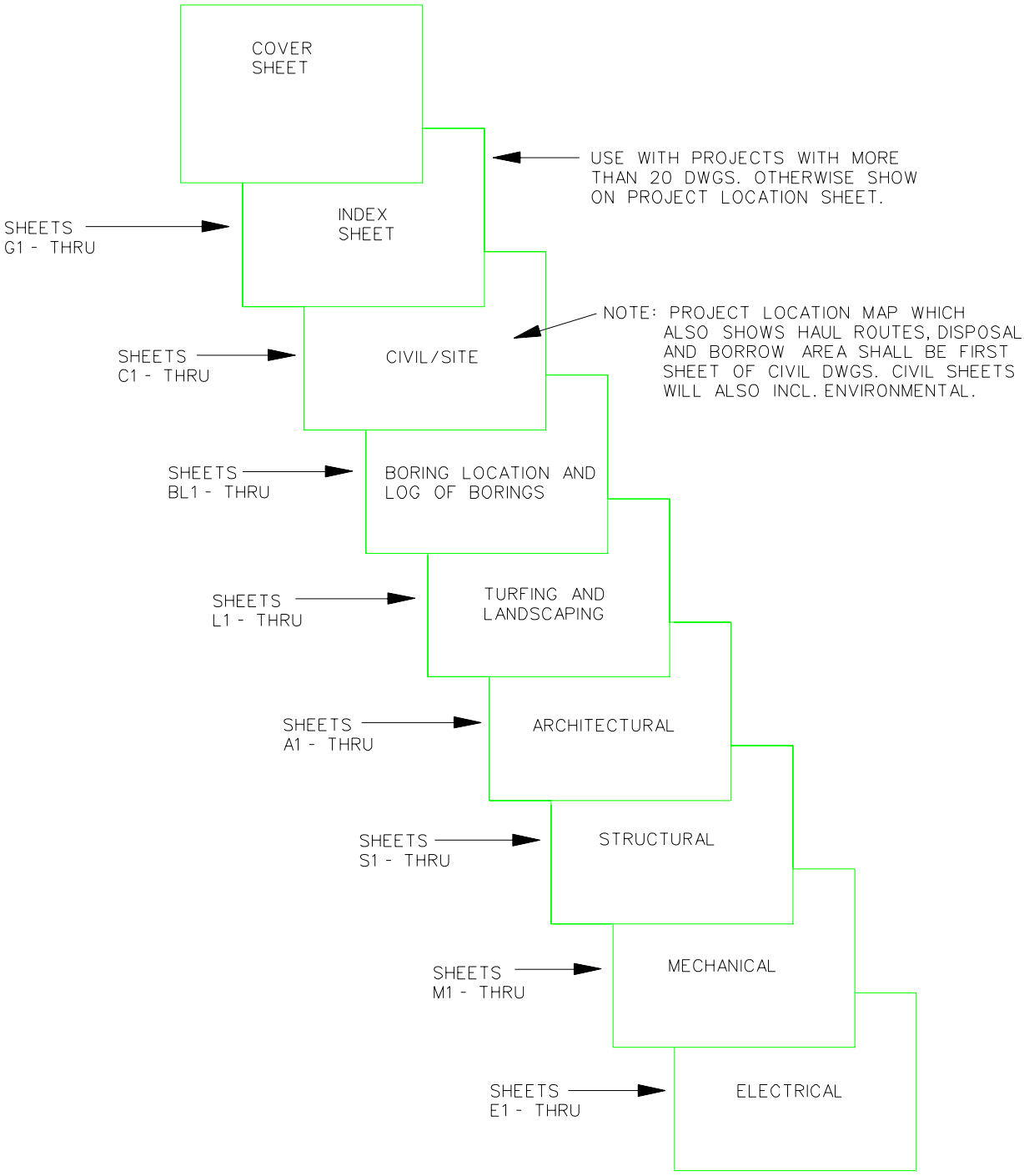

ELEVATION, SECTION & DETAIL CROSS REFERENCES

NOTE TO DESIGNER:
THE FOLLOWING SECTIONING/DETAILING CONVENTIONS
WILL BE USED ON ALL WORKING AND FINAL DRAWINGS.

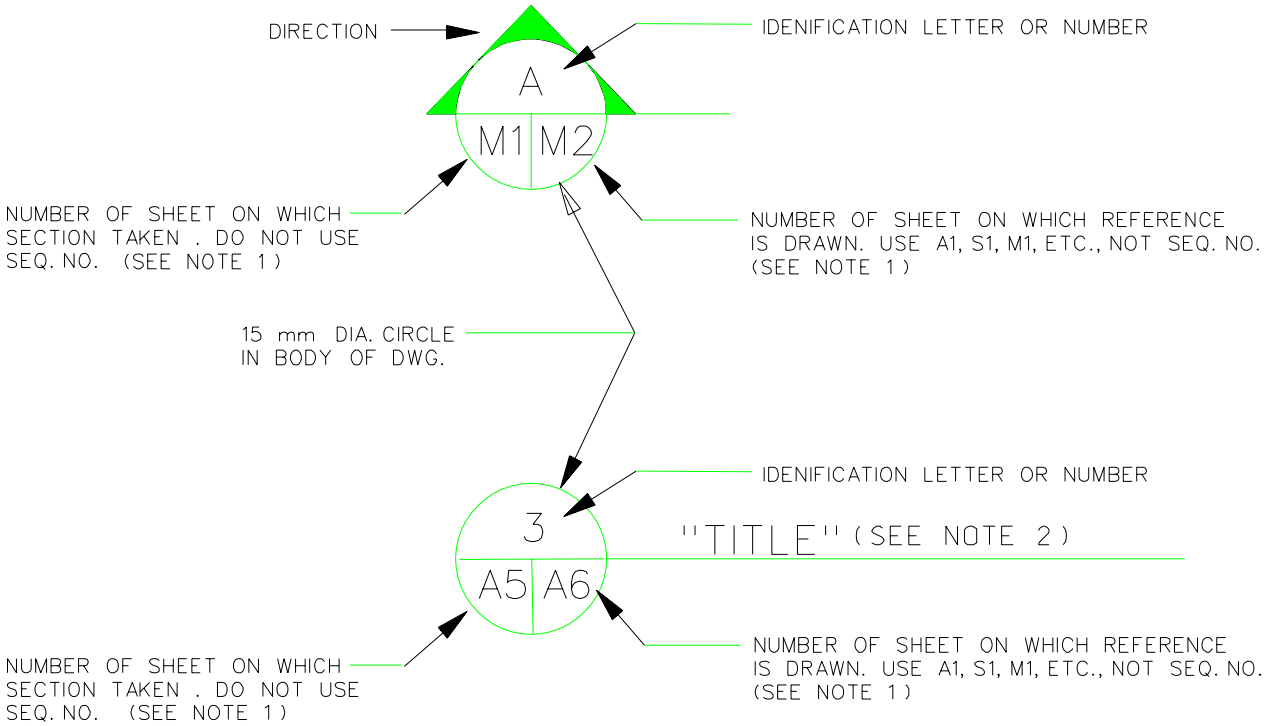

NOTE 1: ELEVATION, SECTION & DETAIL REFERENCES. SHOWN ARE EXAMPLES ONLY.
USE THE PROPER DESIGNATION FOR EACH DISCIPLINE.

C = CIVIL
A = ARCHITECTURAL
S = STRUCTURAL
M = MECHANICAL
E = ELECTRICAL

BL = BORING LOC. & LOG OF BORINGS
L = TURFING & LANDSCAPING

NOTE: TRI-SERVICES CADD/GIS STANDARDS
CONTAIN ADDITIONAL DISCIPLINE DESIGNATIONS.

NOTE 2 : A TITLE MUST IDENTIFY THE VIEW AS A PLAN, ELEVATION, SECTION, SECTIONAL ELEVATION, ETC. THE TITLE MUST ALSO IDENTIFY WHAT THE VIEW IS REPRESENTING: ELECTRICAL SITE PLAN, PIPING PLAN, ETC. THE WORD "DETAIL" OR "VIEW" OR "ELEVATION" EVEN IF USED WITH A CROSS-REFERENCE BUBBLE. IS NOT A SUFFICIENT IDENTIFICATION OF THE VIEW. A TITLE MAY HAVE SUBTITLES AND EXPLANATORY NOTES.

CHAPTER IX

DESIGN ANALYSIS

Table of Contents

1. GENERAL

2. PREPARATION
   - 2.1 Size and Layout
   - 2.2 Organization
   - 2.3 Classified Material
   - 2.4 Design Calculations
   - 2.5 Automated Data Processing
   - 2.6 Standard Designs
   - 2.7 Other Data
   - 2.8 Submission

3. FORMAT AND CONTENT

4. DESIGN ANALYSIS TABLE OF CONTENTS

Part 1	General Description
Part 2	Design Requirements and Provisions
Chapter 1	Civil
Chapter 2	Environmental
Chapter 3	Architectural
Chapter 3 A	Interior Design
Chapter 4	Structural
Chapter 5	Mechanical
Chapter 6	Electrical
Chapter 7	Fire Protection and Life Safety
Chapter 8	Physical Security
Part 3	0&M Provisions
Appendix A	Pavement Design
Appendix B	Foundation Design Analysis
Appendix C	Construction Phasing Data
Appendix D	Physically Handicapped Checklist
Appendix E	Quality Control Plan
Attachment A	Cost Estimate
Attachment B	Drawings, Sketches, Photographs
Attachment C	Specifications
Attachments D-Z	Miscellaneous

CHAPTER IX
DESIGN ANALYSIS

1. **GENERAL**. The requirements and procedures for the preparation of a project design analysis are contained in ER 1110-345-700. Basically this ER addresses the contents required in a final design analysis for Contract Plans and Specifications. Information in this chapter supplements ER 1110-345-700. Additional guidance on contents of design analysis for other phases of design in this document are in chapter XI that covers submission requirements and chapters II through VI for technical disciplines. The design analysis will consist of bound assemblies to define the project, and present functional and engineering criteria, design analysis computations, drawings, specifications and estimated costs. Copies of the cost estimate shall be furnished as specified in Chapter X. Contents in the design analysis shall be suitable for independent technical review, permanent record purposes, for use in adapting the design to other sites, and future re-evaluation and modification of the construction.

2. **PREPARATION**.

2.1 **Size and Layout**. The design analysis shall be produced by a word processor and letter quality printer (using 12 point size print). Hand printed, sketches, photographed material shall be scanned to form an electronic image in the design analysis. Generally material shall be prepared for reproduction on vertically oriented A4 metric, 210mm x 297 mm (8.3 inches x 11.7 inches) or standard 8 ½ x 11-inch sheet size when metric is not available. Larger sheets, A3 metric, 297 mm X 420 mm, folded to the prescribed size may be utilized when appropriate for drawings. All side margins will be 25 mm (1 inch) minimum to permit side binding and head-to-head duplication.

2.2 **Organization**. The design analysis for projects with more than one building or facility will be organized into volumes for each major facility with a title page and complete table of contents for each volume. The individual parts, chapters and sheets of the design analysis for each facility shall be numbered sequentially and bound under one cover (insofar as practicable) indicating the volume number (if more than one), the name of the facility, the name of the project if different, the project number, fiscal year, date of

publication, and the drawing and specification numbers assigned to the facility. Covers will be a durable material with information to indicate contents thereon.

2.3 **Classified Material**. Every effort will be made to prepare the design analysis as to permit it to be an unclassified document, with proper reference to sources of classified material. Design analyses containing classified material will be marked and handled in accordance with applicable security regulations.

2.4 **Design Calculations**. Design analysis shall be prepared in metric. Technical design analysis will be performed and checked by separate individuals. An independent technical review shall be accomplished in accordance with a design Quality Control Plan (QCP) The names or initials and registration of individuals performing the independent technical review will be indicated on the computation pages or a cover sheet for the calculations. Presentation will be clear and legible. The source of loading conditions, formulas, references and tabulation showing all design loads and conditions will be identified. Assumptions and conclusions will be explained and cross-referencing will be clear.

2.5 **Automated Data Processing**. When computer programs are used, the design analysis should include a complete listing of the input and output data, and calculations necessary for preparation of the input data. Input should be annotated to facilitate a reviewer's verification of data. Computer output should be in a format that identifies results by proper column headings and line identification keyed to a sketch of the structure if necessary. Voluminous output data may be included in a separate volume or, output presentation may be limited to key sections or to typical results when output is repetitive. Computer programs will be considered "approved" or "non-approved," where approval is subject to District approval for A-E designs. Approved programs will be those commonly used programs judged to be reliable and thoroughly debugged; examples of approved programs are BLAST, STRUDL and COGO. Non-approved programs are typically those written by an individual engineer to simplify repetitive computations. When non-approved programs are used the design analysis must include a description of the theories, assumptions and design methods employed, sufficient to verify validity of the

program. Non-approved programs will require a higher degree of input description and output verification.

2.6 **Standard Design**. Analyses for standard designs shall be prepared in accordance with the requirements of ER 1110-345-700 and applicable requirements in this chapter. Modifications of standard design analysis shall be accomplished to meet project site conditions as authorized by ER 1110-345-700.

2.7 **Other Data**. Codes, manuals, special investigations and reports are to be considered and used as applicable.

2.8 **Submission**. Except when specifically exempted, a design analysis will accompany all drawings submitted. The design analysis presented with preliminary or partially completed work will be as complete as the stage of design progress permits. Types of submittals along with a description of the required contents for that type are outlined in Chapter XI. Which of the types of submittals are required is stated in the A-E contract.

3. **FORMAT AND CONTENT**. The basic design analysis format for each phase of the design (Air Force Project Definition, Army Project Engineering, Army Concept, Army and Air Force Charette, Preliminary, Final, and Corrected Final) are essentially the same, adjusted for the particular level of design and the type of facility. The following pages present the format to be used in the preparation of the Design Analysis for each discipline. ER 1110-345-700 and the other chapters of this document provide items to be addressed in the Design Analysis, Drawings, and Specifications.

4. **DESIGN ANALYSIS TABLE OF CONTENTS**.

Part 1	General Description
Part 2	Design Requirements and Provisions
Chapter 1	Civil
Chapter 2	Environmental
Chapter 3	Architectural
Chapter 3 A	Interior Design
Chapter 4	Structural
Chapter 5	Mechanical
Chapter 6	Electrical

Chapter 7	Fire Protection and Life Safety
Chapter 8	Physical Security
Part 3	O&M Provisions
Appendix A	Pavement Design
Appendix B	Foundation Design Analysis
Appendix C	Construction Phasing Data
Appendix D	Physically Handicapped Checklist
Appendix E	Quality Control Plan
Attachments	
Attachment A	Cost Estimate (See Paragraph 6 in Chapter X; a separate cost estimate shall be furnished to district cost engineer for Final and Corrected Final designs)
Attachment B	Drawings, Sketches, Photographs (A separate set of drawings shall be furnished for Final and Corrected Final designs)
Attachment C	Specifications (See Paragraph 2 in Chapter VIII; a separate set of specifications shall be furnished for Final and Corrected Final designs)
Attachments D thru Z	Miscellaneous (Design computations, etc.)

(*) Note: The above list includes items that must be in the Final Design. The following item descriptions are asterisked to indicate items that must be included in the design analyses submittal for project definition, and project engineering phases for a particular construction feature. If a Part or Chapter is not appropriate, document with "N/A".

PART 1 – GENERAL DESCRIPTION

Describe the purpose and scope of the particular stage of design, and the particular project being designed, generally as follows:

*1. Directive Authorization and Project Description. Give Job Number, Directive Authorization(s) number and date, item category code number, nomenclature, directive scope, programmed dollars, and cost limitation dollars. Provide a brief general description of the project.

*2. A-E Contract Data. Copies of DD Form 1391 (Army projects) and Engineering Instructions with A-E Service Contract Number and date of Notice to Proceed.

*3. Background Criteria. Describe definitive drawings if applicable, and all other drawings or data furnished for design of project. State whether new design or site-adapted.

*4. Government-Furnished Equipment. List any known equipment to be furnished and/or installed by the using service. List any known equipment to be furnished by the Government and installed by the construction contractor.

*5. Security Provisions/Force Protection. State any overall security requirements relating to the project. Address assets to be protected, aggressor threat, and tactics designed against, level of protection.

6. User Information. A compilation of operational characteristics related to design provisions for efficient utilization and maintenance of the overall project to include features built in to provide flexibility, aid housekeeping, control service systems, and provide safety.

*7. Site Visit and Conference Notes. Include copy of notes.

*8. Waivers/Permits. List any waivers that are required, such as fire clearance, building spacing, airfield clearance, POL, ammunition/explosive area, sole source products, etc. State what agency must approve the waiver. Waiver request and documentation therefor should be submitted under separate cover.

*9. Design Quality Control Plan (QCP). An separate QCP shall be attached as Appendix E to each Design Analysis submittal. See A-E contractual provisions and the district Quality Management Plan for the required content.

*10. Economic Summary.

10.1 Summarize results of economic analysis and refer to specific portions of the design analyses which contain the economic analysis.

10.2 Identify results of value engineering studies performed on the project design.

11. Construction.

11.1 Instruction. Designer shall provide directions to field construction managers for special subjects such as new and sensitive technology items and features needing particular attention for quality control, workmanship, assembly, etc.

11.2 Phasing. Summarize any known or anticipated construction phasing/sequencing requirements. Refer to Appendix C for details of phasing.

11.3 Duration. Length of construction period in calendar days, not including weather delays. Coordinate with Appendix C.

*12. Design Problems. Cite any special problems encountered, with recommended solution. Note any significant changes made from criteria and/or previous design stages.

13. Guide Specifications. List all applicable guide specifications.

PART 2 – DESIGN REQUIREMENTS AND PROVISIONS

This part of the design analysis will include subparts for each major design discipline.

CHAPTER 1 - CIVIL

*1. Site Analysis.

*1.1. Existing site description, including facilities, utilities to remain, to be removed, and/or to be relocated.

1.2 Analysis of the most effective use and adaptation of the site for the proposed facility. Briefly explain building orientation, building setbacks, driveway and sidewalk locations and widths, parking area locations and sizes, walking distance consideration, emergency access, mail and garbage access, environmental considerations, and functional relationships to other facilities. Show parking allocation calculations. State whether or not the facility will be accessible to the physically handicapped.

*1.3 Security. Describe the force protection measures designed into the site analysis to mitigate aggressor threats such as standoff zones, and vehicular barriers.

1.4 Briefly explain other siting considerations such as reversal of standard plan and functional and esthetic relationship with surroundings. Explain rationale for locations of borrow areas, disposal sites, and contractor plant areas.

*2. Grading. State the minimum and maximum grades utilized to develop the desired grading and drainage plan. State the rationale used in establishing the finish floor elevation of the building(s) and the overall grading and drainage plan. Any deviation from criteria should be stated and fully explained.

*3. Pavements.

*3.1 Identify the areas to be paved and the type of pavement to be used. Reference Appendix A of Design Analysis, pavement Design.

3.2 The type and volume of traffic, class of roads, and Design Index should be stated, with jurisdiction for any deviation from criteria for those classes. Streets should be classified per TM 5-822-2 (AFM 88-7, Chapter 5).

3.3 All pavement information should reflect the date and recommendations. Reference Appendix A of Design Analysis for additional information.

4. Storm Drainage.

4.1 Proposed storm frequency, rainfall intensity, and methods used for determination of rate of run-off and design of drainage features.

4.2 Provide a description of the existing and proposed drainage patterns, the rationale for the proposed design, and the
impact of future development on drainage.

4.3 Proposed types of materials to be specified for culverts, storm drains, and related structures.

4.4 Describe special drainage structures.

4.5 Provide drainage calculations and drainage area maps as an attachment to the design analysis. See paragraph 10, Calculations.

*5. Utilities.

*5.1 Water Supply and Distribution. General explanation of the existing service. Where major extensions are required, describe system, indicating type, storage, condition, water pressures, and unsatisfactory elements.

5.1.1 Provide statement on type of construction, proposed materials, required flows or capacities, including designer's selected pipe sizes. Where pump stations, storage, or treatment plants are involved, include tentative sizes and basic data (population, fire flows etc.) used in sizing equipment. Provide the domestic and/or fire protection demand(s) and state the static and residual pressure at the building line. State the static and residual pressure in the existing main at the flow rates of the new facility. Cross-reference the mechanical design analysis for the determination

of the water demand. State requirements for valves, meters, and fire hydrants. Attach complete calculations for sizing water piping.

*5.2 Sanitary Sewer. Provide a general description of the existing sewer system located within the area. Describe the revised system as it relates to the operation of the existing system and the proposed new facility.

5.2.1 Describe type of new system, conveyance sizes and grades, pipe materials, and contributing flows. Where lift stations are required, state type of construction, and pump type, flow, head, size, and number. State requirements for manholes and cleanouts. Attach all calculations used in the sizing of system.

5.3 Landscape Irrigation. Provide a general summary of system requirements, including required application rates and types of heads specified. Describe user requirements as to system features and operation used in preparation of the specifications.

*5.4 Gas Supply and Distribution. Provide a general description of the existing gas system located within the area. Describe the new system as it relates to the operation of the existing system and the proposed facility including the pressure and flow-rate capacities of the existing lines to be used and the pressure and flow-rate requirements of the proposed facility.

5.4.1 State the requirements for valves, meters, regulators, blow-offs and drips. Attach all calculations used in the sizing of the new system.

6. Fencing. Provide type and height of fence and describe the area to be secured. State the number, type, and size of gates provided. Describe the fence and gates to be removed and state if the removed fence and gates will be reused in this contract, turned over to the installation, or disposed of.

7. Turf and Landscaping.

7.1. Description of methods of vegetation establishment. Scope of work, such as the number and kinds of trees and shrubs.

7.2 Rationale of the landscape plan and the use of the trees, shrubs and vines in the design of the landscape plan. Facility security must be incorporated into the landscape layout plan and addressed in the design analysis.

7.3 Existing trees to be removed and trees to be saved.

7.4 Instructions for planting, replacement, and maintenance of landscape plants.

*8. Railroads. Statement of type of service for which railroad track will be provided, anticipated volume and type of traffic, and the ruling grade. Proposed type, source, and thickness of ballast, weight of rail, source, treatment and dimensions of ties proposed.

9. Economic Justification. Analyses shall be provided in the choice of basic materials, functional systems, and other design options in sufficient detail to justify economically the materials, systems, and options selected. Suitable documentation shall be provided to:

9.1 Verify that the necessary studies have been made.

9.2 Identify the alternatives considered.

9.3 State the decisions made, and;

9.4 Indicate the basis for the decisions and cost determination. Economic studies should include consideration of maintenance costs for the design life of the structure if such information is readily available. The formalized life cycle costing technique is not required unless the contract has been negotiated to include additional developing of life cycle cost data or alternatives.

10. Calculations. All calculations will be submitted, including calculations for the sizing of utility lines, and storm drainage facilities.

*11. Additional Criteria Needed. List criteria needed to complete final design.

CHAPTER 2 - ENVIRONMENTAL

Refer to AEIM Chapter 12, Environmental Design, for further clarification of submittal requirements. Long-term operations and maintenance considerations and constraints should be identified and documented.

*1. Cultural and Natural Resources. Identify the type of documentation provided to indicate compliance with the National Environmental Policy Act (NEPA). If an Environmental Assessment (EA) or Environmental Impact Statement (EIS) was prepared for the project, discuss portions of the EA or EIS which affected or were included in the plans and specifications. Also identify any historic properties, cultural resources, endangered species, wetlands, or floodplains which affect or were considered in the design. If none of these items were a factor in the design, state such to indicate that their consideration was not omitted.

2. Water Quality and Prevention of Water Pollution.

2.1 Water Supply. Identify and discuss the design criteria used for water supply features such as ground and elevated storage tanks, chlorinating and other treatment units, pumping stations, and water wells. The discussion should include water quality data, assumptions made, catalog cuts for process equipment (minimum 3 each), design parameter sources, applicable regulations, design methodology and calculations, and coordination and compatibility with existing facilities. Constraints imposed on the design by existing water rights (aquifer drawdown restrictions, maximum rates of removal, etc.) should be discussed.

2.2 Municipal Wastewater. Identify and discuss the design criteria used for municipal wastewater systems such as lift stations, pneumatic ejectors, on-site sewerage systems, and wastewater treatment plants. The discussion should include effluent quality data, assumptions made, catalog cuts for process equipment (minimum 3 each), design parameter sources, applicable regulations, design methodology and calculations, and coordination and compatibility with existing facilities and pre-treatment standards. Geotechnical considerations should be documented for projects which include a septic tank and/or drainfield. State Designated Uses of surface water as well as numerical water quality standards of the receiving stream should be researched, evaluated and documented.

2.3 Industrial Wastewater. List industrial and other process wastewater streams that will result from facility operations. Data characterizing the waste stream should be included as well as listing and identifying any pretreatment standards for industrial discharges as covered by 40 CFR 400-471. Identify the receiving Federally Owned Treatment Works (FOTW) or Publicly Owned Treatment Works (POTW) and their pretreatment criteria for industrial wastewater generated by the facility. If the discharge is to a FOTW, the design should be coordinated with the FOTW operators. Discuss the design features and treatment units included in the plans and specifications to meet the POTW criteria, including oil/water separators, retention basins, and acid neutralization facilities. The discussion should include effluent quality data, assumptions made, catalog cuts for process equipment (minimum 3 each), design parameter sources, applicable regulations, design methodology and calculations, and coordination and compatibility with existing facilities.

2.4 Storm Water. If a General Permit for Storm Water Discharges from Construction Sites is required for the project, summarize the temporary storm water controls and the Storm Water Pollution Prevention Plan included in the design for use during project construction. Also discuss permanent features which are included in the design for management of storm water during facility operations. Identify whether or not a storm water permit will be necessary for operation of the completed facility.

3. Air Quality and Prevention of Air Pollution. Identify equipment and facilities in the project that will produce emissions regulated under the Clean Air Act. Discuss design features included to meet applicable regulatory criteria. If demolition of equipment containing Ozone Depleting Substances (ODC) is part of the project, discuss requirements included in the plans and specifications to ensure the equipment is properly purged before demolition. Also identify and discuss emissions that will occur and need to be controlled during construction of the project. Clean Air Act Title V operating permit and permit to construct should be discussed as well as responsibility for permit application process. In air quality non-attainment zones, any special design or construction restrictions should be listed. Future regulations may prohibit operation of heavy equipment during certain times of the day. ACM/NESHAPS coordination and permitting requirements should be documented.

4. Solid Waste (Non-hazardous). Provide an estimate of the quantity (cubic meters) of waste to be generated by operation of the complete facility. Discuss design features (i.e. dumpster pads) included for the collection and temporary storage of the waste. If solid waste compactors, transfer stations, recyclable sorting and storage areas, or disposal areas are part of the project, include a discussion of design assumptions made, catalog cuts for process equipment and off-the-shelf systems (minimum 3 each), design parameter sources, applicable regulations, design methodology and calculations, and coordination and compatibility with existing facilities.

*5. Hazardous, Toxic and Radiological Wastes (HTRW).

All relevant and applicable regulations which affect or impact the design should be cited and/or documented. Specific disposal requirements dictated by each of the projects waste streams should be documented. Requirements for waste manifesting should be explicitly documented (i.e. generator identity, responsibility for filling out the manifests, and authorized personnel to sign the manifests,).

5.1 Asbestos Containing Material (ACM). Identify ACM which will be affected by project construction, and discuss how it is addressed in the plans and specifications.

5.2 Lead-Based Paint (LBP). Identify LBP which will be affected by project construction, and discuss how it is addressed in the plans and specifications. Any target housing should be identified and the applicable abatement standards listed. Application of the AEHA protocol for waste stream characterization should be discussed for demolition projects.

5.3 Polychlorinated Biphenyls (PCB). Identify all electrical equipment, including fluorescent lights, which contain or potentially contain PCBs. PCB Bulk Product Waste (40 CFR 761) should also be identified such as dried paints, mastics, caulks, gaskets, etc. Discuss how the equipment is addressed in the plans and specifications. Historic PCB spills should be identified along with design considerations for the remediation of the spill sites. Regulatory standards and specific requirements regarding cleanup standards, handling, marking, and disposal should be considered in the design and fully documented.

5.4 HTRW other than ACM, LBP, and PCB. If project construction or facility operation after construction will generate HTRW, identify the wastes. Discuss criteria included in the plans and specifications for correct characterization, handling, storage, and disposal of wastes generated during construction. Discuss the design features which ensure that adequate storage facilities will be provided for wastes which will be generated by facility operations. Project specific characteristics and impacts should be documented such as classification as a small or large quantity generator, the need for a temporary 90-day hazardous waste/material accumulation area, and other related requirements such as spill response plans, training etc.

5.5 Contaminated Sites. If the project involves work in an industrial area with a potentially contaminated site, in an Installation Restoration Program (IPR) site, or other known contaminated site, discuss the sampling, monitoring, and/or testing accomplished during design or required in the specifications to determine the presence and extent of contamination in the project area. Discuss how this contamination will be avoided or premeditated during construction. The site’s regulatory status, remediation goals, permits or modifications to existing permits, public participation requirements, regulatory consent orders (i.e. CERCLA Record of Decision, Federal Facilities Agreements) should be documented and referenced. Any specific requirements for characterization, storage, transportation, treatment, or disposal of HTRW should be identified.

5.6 Above-ground Storage Tanks (AST) and Underground Storage Tanks (UST). Identify by size, type, and contents storage tanks in the project. Discuss the design features included to meet regulatory criteria for emissions control, tank design, monitoring systems, piping design, and fire safety. Also address notification and registration procedures for tank installation and first fill, if applicable, and discuss how the requirements are being met. If the project involves closure of an existing UST, design considerations for removal vs. abandoning in place should be discussed. Any closure criteria, attendant design features (such as a soil vapor extraction system), or follow on requirements (such as installation of monitoring wells and monitoring program) should be documented.

5.7 Worker Protection. Identify site-specific hazards that may be present while accomplishing the demolition and/or construction work included in the project. Cite where and how worker protection requirements have been addressed by the plans and specifications and discuss the reasoning behind the minimum level of Personal Protective Equipment (PPE) specified. Data needed to make worker protection decisions should be documented. Use of any engineering controls should be discussed. Any special qualifications required by the workers should be documented such as 40-hour Hazardous Waste Operations Training or unexploded ordnance safety specialists.

5.8 Universal Wastes. Identify universal wastes such as mercury thermostats and switches, fluorescent lights, disposable batteries etc. and document disposal requirements and/or special handling.

5.9 Unexploded Ordnance (UXO). Projects should be evaluated for UXO implications and findings documented.

*6. Federal, State, and Local Permits. Identify the environmental permits and notifications necessary to construct the facility and discuss how they are addressed in the plans and specifications. Also identify permits which the customer will need to operate the facility. For all permits, clearly outline who the regulatory authority is, what type (water, air, waste, other) of permit is needed, what phase or part of the project requires the permit (i.e. asbestos removal, construction or tank operation), and who is responsible for obtaining the permit. The entity responsible for regulatory coordination should be specified.

7. Sustainable Design. Use of green building technologies utilized during the design or construction to minimize waste generation, encourage recycling, reduce energy consumption, and/or preserve natural resources should be evaluated and documented. Refer to ETL 1110-3-491 for basic criteria and information pertaining to incorporating sustainable design.

CHAPTER 3 - ARCHITECTURAL

*1. General Description. Briefly describe the proposed facilities, functional purpose, capacities and type of construction. Confirm any building fire protection and physical security classifications cited by the project criteria. Refer to Architectural chapter III and chapter XI for further clarification of design documentation requirements for different phases/types of project submittals.

*2. Criteria References. List architectural criteria references numerically.

*3. Design Criteria. Present design data and/or show numerical
reference and page number as applicable for the following:

3.1 Space Allocations. State program scope, personnel capacity, and any unit or statutory limitations for building. State comparable gross scope and unit factors for proposed design. List programmed and proposed net area for each space and occupant capacity thereof.

3.1.1 External Activities. Summarize external operations, activities, parking and circulation including vehicular and pedestrian traffic flow on any adjoining site.

3.1.2 Internal Activities. Confirm activities, matrix or adjacency relationship cited in project criteria. Clarify equipment, furniture or furnishing requirements. Establish interior heights and operational clearances for special equipment.

*4. Basic analysis. Confirm scope and establish basis for proposed design in relation to the DESIGN CRITERIA cited above.

4.1 Master Plan/Future Expansion. Reference master plan and future expansion requirements. Explain coordination and interface with master plan and flexibility of plan for future expansion.

4.2 Visual Features. Describe visual setting, setbacks, primary views or focal points and physical features of the site. Name existing permanent facilities, function and location that influence design and materials selections.

Explain any historical, traditional and community interrelationships which influence design. Describe visual appearance to and from dominant facilities.

4.3 Spatial Composition. Provide spatial analysis of optimum land use, massing, proportioning and balance between facilities, paving and open space. Describe basis for grouping buildings, exterior circulation, form and configuration in terms of functional clearances, sound, fire or protective construction zones.

4.4 Accessibility. Analyze required aggressor security threat(s) defensive measures, primary, secondary, service, fire and walkway access, building to building and parking relationships.

4.5 Energy Conservation. Establish solar design load, altitude, azimuth and shade factors. Describe prevailing summer and winter wind and micro-climate and passive solar criteria and bases for orientation and building fenestration. If active solar equipment is utilized, describe location, arrangement and service access.

4.6 Functional Organization. Describe significant bases for plan arrangement, space adequacy relationships circulation and equipment placement and physical security measures. Clarify life of functions accommodated and flexibility of design for operational changes.

4.7 Life Safety.

4.7.1 Fire Safety. Explain external and internal fire hazards effecting design. Analyze building type and fire protection classifications including multiple occupancies. Confirm occupancies by room and project criteria and coordinate equivalent occupancies with the mechanical analysis. Describe fire separations, exit conditions and units, fire fighting access and class of finishes. (These data may be parts of the fire safety chapter and referenced.)

4.7.2 Barrier Free Design. Cite physically handicapped and OSHA criteria relevant to project design. Explain access and design response for the physically handicapped and any provision for OSHA or blind vending as applicable.

4.7.3 Security. Discuss physical security in form of assets to be protected, aggressor threat, level of protection, occupant safety, lock keying, radiation protection and restricted access areas. Discuss facility lay-out and building elements designed into the facility to address security.

4.8 Acoustical Design. Cite external and internal noise sources, decibel or noise zone ratings and sound attenuation criteria. Describe resolution of external and internal sound levels, sound attenuation separations and detail measures.

*5. Building Systems, Materials & Equipment. Describe basis for building systems, exterior and interior materials and equipment selections as applicable in accordance with the C.S.I. index below. For detail instructions on each subject refer to Architectural chapter guidance.

1. General
2. Sitework
3. Concrete
4. Masonry
5. Metals
6. Wood
7. Roofing/Insulation
8. Doors and Windows (Hardware)
9. Finishes (Interior & Exterior)
10. Specialties (Signage)
11. Equipment (Contractor/ Government Furnished
12. Furnishings
13. Special Construction
14. Conveying Systems
15. Mechanical
16. Electrical

*6. Economic Justification.

6.1 Discuss adequacy of programmed amount for comprehensive design and major architectural systems in terms of efficient operational and building construction performance, maintenance and cost. Provide life cycle or comparative cost analysis for the following systems when over $100,000 construction value.

6.1.1 Roofing

6.1.2 Exterior wall

6.1.3 Interior Partitioning

6.2 Describe significant architectural aspects of constructibility in the cost estimate including availability of materials, labor, skills, local construction practices,

weather and site conditions and items requiring long lead times or special procurement.

*7. Criteria/Approvals Requested. Summarize additional project criteria, waivers or approval actions required for proceeding with design. List recommendations for resolution of conflicts in criteria and requests for deviation.

8. Calculations. The final architectural design analysis shall be supported by the following:

8.1 Space Allocations: Show computations for space layout including net room areas and gross building areas (indicate mechanical and electrical space separately). Categorize areas and capacities under operations, administrative, storage and support requirements.

8.2 Energy Conservation.

8.2.1 U-values. Show calculations for floor, walls and roof assemblies.

8.2.2 Passive Solar Design. Provide graphics and calculations for solar control including solar load, orientation, day lighting, shade factors and ratio of glazing to room area.

8.3 Life Safety.

8.3.1 Fire Protection. Show or reference data and calculations for criteria area limitations, separations, exit units and distance to exits.

8.3.2 Design for the Physically Handicapped. Include documentation and checklist analysis of design requirements for the physically handicapped or blind vending where applicable.

8.4 Acoustical Design. Show calculations for external and internal sound attenuation.

8.5 Economic Justification. Include economic data and life cycle calculations as appropriate.

CHAPTER 3 A - INTERIOR DESIGN

Note: The basic interior design analysis for Building Related/Structural Interior Design is an integral part of the Architectural Design Analysis. The extended interior design analysis for Furniture Related/Comprehensive Interior Design is outlined below:

1. General Description:

Briefly reference the project design and summarize the extended design services provided.

2. Criteria References:

List interior design criteria references numerically.

3. Design Criteria:

Present design data and/or show numerical reference and page number as applicable for the following:

3.1 Space Allocations. Confirm adequacy of net space provided under the project design in relation to the furniture and furnishing needs.

3.2 Internal Activities. Confirm the adequacy of programmed furniture furnishings and equipment in relation to internal activities and interior design needs.

4. Basic Analysis:

4.1 Functional Evaluation. Discuss the functional criteria and objectives of the design and how the design arrangement and selection of basic components satisfy the needs of functional groupings. Describe functional design in terms of accessibility, circulation, mobility, safety, and interchange ability of components.

4.2 Environmental Response. Discuss the design basis for selection of color, finishes, furniture, and furnishings in relation to climate, daylighting, physical and cultural design conditions. Describe the environmental design response in terms of dominant spaces, focal points, visual features, relationship to exterior design, solar and acoustical control.

4.3 Economic Justification. Discuss the selection and procurement of interior design items from the standpoints of durability, maintenance and value for projected term of use. Outline bases for any procurement and timing divisions.

CHAPTER 4 - STRUCTURAL

When site-adapting standard working drawings or designs used at other locations, the data required herein should be limited only to design changes and/or updating for conformance to current criteria. Refer to structural chapter IV and chapter XI for further clarification of design documentation requirements for different phases/types of project submittals.

*1. Reference. List applicable technical criteria source publications.

*2. Description of structural system. Specific descriptions should be as follows:

2.1 Framing System. A general description and reasoning for selection of the superstructure framing system of the building should be given. Reasoning for selection of the framing system should include requirements for seismic design and/or for security threats, when applicable. Typically economic considerations should be the main factor in selecting one type of framing system instead of another. System examples: (1) the framing system consists of load-bearing reinforced masonry shear walls at the building perimeter with interior steel columns supporting continuous structural steel girders that support joists. A metal deck roof diaphragm and rigid floor diaphragm are used; (2) the framing system consists of ordinary moment resisting steel frames supporting bar joists that support floor slab and a metal deck roof diaphragms; (3) the framing consists of braced steel frames of tube columns and steel beams. Interior framing consists of tube columns supporting joist girders that support bar joists. A metal roof deck serves as a diaphragm to transfer loads to the braced frames. Ties encased in concrete below the slab-on-grade will connect the piers at each braced frame; (4) the framing system consists of reinforced concrete moment resisting frames and pan joist floors and roofs that are diaphragms.

2.2 Foundation System. Foundation design data and description of type of foundation system used. Reference Foundation Design Analysis, (Appendix B).

2.3 Roof and Floor System method of framing and type of deck. Define if/how the floors and roofs participate in the design of the building lateral load carrying system. When appropriate, state that the roof deck type and thickness forms part of a protective security system for protection against an aggressor or radiation resistance.

2.4 Walls and Partitions. Composition, thickness, of exterior walls and location of all load-bearing and shear walls. When the exterior wall type and thickness was selected to form part of a protective security system or for radiation resistance, so state. Non load-bearing partitions are normally considered to be an architectural item.

*3. Design Loads. Cover roof and floor live loads, crane loads, design wind, seismic design parameters, and unusual dead/live loads due to the facility functional requirements, and include blast loading for security design of roof, walls and frames when applicable. State allowances for future loads.

4. Design Basis. Concrete, masonry, reinforcing, structural steel, light-weight steel framing, bar joists, steel decks, bolts, welds, etc. design materials strengths and material specifications should be referenced. Building code(s) used with load and strength resistance factors, load factors, load combinations or code allowable stresses defined where used in the analysis.

5. Lateral Load Analysis. In addition to analysis for vertical gravity loads, a complete lateral load analysis is required for all buildings to show adequacy of a continuous load path from the point that the lateral load is applied to the foundation. Design lateral loads caused by wind and due to earthquake ground motion shall be analyzed. In regions of low seismically, the seismic analysis should be sufficient to show that wind forces rather than seismically induced forces controls design of the lateral load resisting members. Chapter IV paragraphs 23 and 23.1 contains information to assist in this determination. Even when wind loading controls, typically the resisting system must incorporate some prescribed special requirements for seismic loads contained in seismic design criteria. When seismic controls the basic seismic-force resisting system shall conform to one of the acceptable types indicated in Table 7-1 of TI 809-4 subject to the limitations

on height based on Seismic Design Category indicated in the table. The design analysis shall fully describe the method of resisting lateral loads and design all components and connections in this system from the roof to the foundation. Examples of system descriptions are contained in the Framing System descriptions in paragraph 2.1 above.

6. Security Analysis. Identify the assets to be protected, threat to those assets, the level of protection required. State when conventional construction has been determined to be appropriate for the security threat and level of protection required. When the type of threat and level of protection requires, describe and include analysis for the protection measures designed into the structural system. When appropriate address blast resistant concrete roof thickness and reinforcement, wall type and its thickness and reinforcement, moment resisting frames, shear walls, measures to prevent progressive collapse etc. References TM 5-853-2 should be used as guidance for Concept level design and TM 5-853-3 for final design.

7. Economic Justification. Alternative analyses shall be provided on the choice of basic materials, structural systems, spacing, and other design options in sufficient detail to justify economically the selected configuration. Suitable documentation should be provided to:

7.1 Verify that the necessary studies have been made.

7.2 Identify the alternatives considered. Typically, three competitive systems should be considered.

7.3 Indicate the basis for the decisions and cost determination, including the impact, if any, on mechanical, electrical and architectural.

7.4 Economic studies should include consideration of maintenance costs for the design life of the structure if such information is readily available. The formalized life cycle costing technique is not required unless the contract has been negotiated to include additional developing of life cycle cost data or alternatives.

*8. Calculations. All calculations will be submitted in the design analysis; including:

8.1 Member sizing to satisfy design code provisions for carrying member shears, moments and member design stresses from a structural analysis for specified design load combinations, including secondary stress calculations wherever applicable, with explanation for assumptions and conclusions. Connection design for joining structural members together and to the building foundation.

8.2 Serviceability and Deflection. Verification that members selected will be adequate for deflection caused by load, to limit vibrations, for expansion, sound control, durability and maintainability and comfort of occupants. Structural foundation, frame and walls are compatible with potential settlement/expansion movements induced by earth foundation.

8.3 Sizing of foundations to carry structural loads into the earth, structural members and connections.

8.4 Uplift and stability. Light structures or components thereof shall be checked/designed for uplift due to wind, and buildings with basements or pits below grade shall be checked/designed for uplift due to water in the foundation materials.

CHAPTER 5 - MECHANICAL

*1. Heating, Ventilating, Air Conditioning, Refrigeration, Energy, Piping and Plumbing Systems.

1.1 Requirements, criteria sources, and references for all design considerations for the following general parameters shall
be included:

1.1.1 Criteria listing. Manuals, pamphlets, codes, technical references, etc.

1.1.2 Temperature extremes and other impacts of climate such as wind, precipitation, sun angles, and humidity. Coordinate with architectural design.

1.1.3 Apparent competitive mechanical systems in view of fuel alternatives, energy budgets and environmental impacts, including description and justification for any connections/ expansions of existing systems.

1.1.4 Indoor environmental conditions including temperatures, humidity, pressurization, ventilation, and exhaust requirements.

1.1.5 General HVAC zones and personnel loads.

1.1.6 General toilet and sanitation zones, and occupant capacities (Men and women by functional area).

1.1.7 Water supply pressure.

1.1.8 Existing or planned sanitary sewer capacities.

1.1.9 Toxic or hazardous pollutant sources.

1.1.10 Functions and occupancies requiring mechanical lifts, elevators and cranes.

1.1.11 Special waste and drainage systems.

1.1.12 Energy sources and capacities including heating and chilled water distribution, gas distribution, and fuel storage.

1.1.13 Building and related mechanical system commissioning.

1.2 Include FUNCTIONAL AND TECHNICAL REQUIREMENTS for the following items:

1.2.1 Outside design temperatures and U-values for building construction elements (roofs, walls, floors, etc.).

1.2.2 Equipment heat release data.

1.2.3 Heating and/or air conditioning, refrigeration, including humidity control. (Inside design conditions, outside air requirements, times of occupancy, filtration requirements, zoning, diversity, etc.)

1.2.4 Mechanical ventilation (air circulation) and special exhausts. (Areas requiring ventilation, rates used, filtration requirements, etc.)

1.2.5 Control and disposal of toxic or airborne-polluting substances within the facility and pollutants from the energy systems. (Identify substances, allowable levels, etc).

1.2.6 Energy conservation including solar and recovery systems. (Life cycle costing, energy budgets, ECIP, solar analysis requirements)

1.2.7 Total energy/selective energy systems. (Study directive)

1.2.8 Standby heating and cooling, and emergency environmental systems. (Identify areas, criteria guidance, systems)

1.2.9 Existing and new energy distribution systems serving/on the site. (Existing capacities, type system – natural gas/heating cooling distribution, type of control, piping criteria, etc)

1.2.10 Toilet fixture allocation (Fixtures/person for men and women by functional area).

1.2.11 Domestic hot and cold water systems, supply temperatures and recovery systems (include adequacy for fire protection).

1.2.12 Compressed air and vacuum production components.

1.2.13 Sanitary waste and vent piping.

1.2.14 Acid waste and chemical piping, and neutralization.

1.2.15 Coordination with the connection to site utilities.

1.2.16 Mechanical lifts, hoists and elevators.

1.2.17 Control of airborne-polluting substances within the project.

1.2.18 Control of polluting substances from energy systems.

1.2.19 Treatment and disposal of toxic and/or polluting substances within the project.

1.2.20 Safety and occupational health requirements.

1.2.21 Special Force Protection requirements, protective requirements and security measures, (i.e., Terrorism protection measures, EMR/RFI protection, secure areas, vibration, noise, etc.)

1.2.22 Seismic design and expansive soil requirements. (Identify seismic requirement, pertinent soils, data, etc. Coordinate with structural and foundation design. Identify seismic pipe and equipment bracing requirements.)

1.2.23 Handicapped accessibility/features.

1.2.24 Special process and specialty equipment requirements.

1.3 Provide brief discussion of <u>DESIGN OBJECTIVES AND PROVISIONS</u> for the following (define methods used to meet functional and technical requirements):

1.3.1 Impacts and benefits from natural warming and cooling effects afforded by the site (see architectural chapter) and coordination with passive solar design.

1.3.2 Heating and/or cooling system life cycle cost design to include basis for system selection. (Provide summary analysis of each competitive system, including costs and energy usage. Include descriptions of system(s) selected.)

1.3.3 Air distribution. (Include sizing method used and zoning because of occupancy, function, orientation and fire safety. Detailed fire safety zoning requirements should be included under Part X, Fire Safety.)

1.3.4 HVAC Piping systems. (Define piping systems used within building including type of pipe, insulation requirements, whether piping is concealed or exposed).

1.3.5 HVAC system expandability and feasibility. (Identify provisions for expanding system).

1.3.6 Energy conservation. (Define energy conservation features. Identify ECIP and energy budget results).

1.3.7 Vibration/noise isolation. (Provisions for mechanical equipment and ductwork).

1.3.8 Energy distribution systems. (Central plant distribution system-distribution medium, temperatures, pressures, type system, piping/insulation materials, etc.)

1.3.9 Control of polluting and toxic substances.

1.3.10 Temperature control systems. (Identify any special requirements; include control sequences and EMCS requirements. Briefly define fire safety provisions. Refer also to requirements under Part X Fire Safety and Part VI Electrical – for EMCS).

1.3.11 Consolidation of toilet and sanitation facilities.

1.3.12 Domestic water supply and waste piping systems. Include type of pipe, insulation requirements, whether concealed or exposed.

1.3.13 Domestic water heating systems (include storage and recovery capabilities, operating temperatures, pump requirements, and whether oil, gas, or electric).

1.3.14 Interior natural gas systems.

1.3.15 Connection to utilities.

1.3.16 Plumbing system expandability and feasibility. (Identify provisions for expanding system).

1.3.17 Mechanical lift, hoist, crane and elevator designs.

1.3.18 Force protection and other security features included in the mechanical systems design (system anchoring, clear zones, protection of openings, etc.)

1.3.19 Seismic design and expansive soils. (Identify provisions included in design such as seismic bracing and pipe sleeves through slab-on-grade and grade beams for expansive soils.)

1.3.20 Description of features/systems for enhancement of maintenance and operation. (Additional data is noted under Part XI).

1.3.21 Economy of construction/procurement, operation and maintenance: life-cycle cost effectiveness.

1.3.22 Provisions for building and related mechanical system commissioning, and the testing adjusting and balancing of mechanical systems.

1.3.23 Special safety and occupational health requirements relating to mechanical systems.

1.3.24 Special process and specialty equipment requirements.

1.4 Provide calculations for the following: (Refer to CHAPTER V, MECHANICAL, FOR EXTENT OF CALCULATIONS REQUIRED AT EACH STAGE OF DESIGN; SWD or ASHRAE standard forms shall be used for manual calculations):

1.4.1 Design load calculations and life cycle cost analysis shall be computed in accordance with recognized procedures and as designated by criteria. Step-by-step calculations, summaries, and narrative shall be provided to explain the procedures and results or conclusions. Computerized calculations shall indicate the basis of all input data and other information previously designated in subparagraph: AUTOMATED DATA PROCESSING (ADP) of this chapter. Sample manual calculations to verify the computer design peak loads and typical room calculation(s) shall be submitted for review. Calculations shall include the following and/or separate study documents referenced, as applicable:

1.4.1.1 Heating, air conditioning, ventilating, and refrigerating design loads u-value derivations.

1.4.1.2 Air distribution design.

1.4.1.3 Piping design.

1.4.1.4 Estimated annual unit energy consumption.

1.4.1.5 Alternative energy system analysis (fuels and systems), energy budget analysis, and solar analysis shall be provided as designated by criteria.

1.4.1.6 Energy recovery systems.

1.4.1.7 Total energy/selective energy studies (as directed).

1.4.1.8 Fixture allocations (ensure the quantity of fixtures is coordinated with architectural design).

1.4.1.9 Maximum flow rate (LPM) for domestic hot and cold water, and total flow per day.

1.4.1.10 Sizing of domestic hot and cold water supply systems, including storage tanks.

1.4.1.11 Sizing of interior gas distribution systems.

1.4.1.12 Maximum flow rate (LPM) for waste water and sewage, and total flow per day.

1.4.1.13 Sizing of waste water and sewage drain system.

1.4.1.14 Sizing of special gas and liquid distribution systems.

1.4.1.15 Complete system and unit capacities, indicating dimensions of all equipment. (3 manufacturers identifying specific model numbers, styles, etc., to fully define the selection shall be cited for each major item of equipment).

1.4.1.16 Cost comparison of competitive systems.

1.4.1.17 System noise isolation, seismic requirements, force protection, and necessary references to fire protection.

1.4.1.18 Special requirements for safety and occupational health.

1.4.1.19 Environmental impact analysis including energy system pollution abatement and control of toxic and airborne polluting substances.

*2. Other Systems. Brief description of other mechanical systems not defined herein, identifying functional and technical requirements, design objectives and provisions. Calculations supporting the design shall be provided.

*3. Economic Justification. Analyses shall be provided on the choice of basic materials, functional systems, and other design options in sufficient detail to justify economically the materials, equipment, systems, and options selected in accordance with applicable criteria. An energy analysis for all systems considered shall be provided. (Refer to ETL's, AEI, MIL-HDBK-1190,and SWD Criteria Letters.)

3.1 Suitable documentation shall be provided to:

3.1.1 Verify that the necessary studies have been made.

3.1.2 Identify the alternatives considered and summarize results.

3.1.3 State the decisions made, and

3.1.4 Indicate the basis for the decisions and cost determination.

3.2 Economic studies shall include consideration of initial maintenance and operation costs for the design life of the structure. Additional definition of these requirements is provided in Part II, ENERGY CONSERVATION.

4. Fire Safety Provisions. Provide brief description identifying functional and technical requirements, design objectives and provisions.

4.1 Fire Extinguishing Systems. Brief descriptions of systems provided including hazard classification, densities, areas of demand, flow and pressure requirements. Include calculations to support design. See Chapter V for extent of calculations required at various design stages.

4.2 HVAC FIRE/SMOKE CONTAINMENT/REMOVAL SYSTEM. Provide brief description identifying the type of systems used and method of operation. (Refer to Part X. FIRE SAFETY)

*5. Coordination with installation or outside agencies:

5.1 List additional/criteria needed for final design.

5.2 Identify requirements for total energy/selective energy planning.

5.3 Identify maintenance support requirements.

5.4 Indoor environmental requirements including temperatures, humidity, and outside and exhaust air requirements.

5.5 Type, number schedule and activity level of occupants.

5.6 Equipment to be installed along with utility requirements, environmental requirements and heat release.

5.7 Requirements for mechanical lifts, hoists, cranes and elevators.

CHAPTER 6 - ELECTRICAL.

*1. Provide requirements, criteria sources, and references for the following general parameters as applicable.

1.1 Type of occupancies.

1.2 Specialized functions/equipment.

1.3 Communications support.

*2. Interior Electrical Distribution System.

2.1 Include FUNCTIONAL AND TECHNICAL REQUIREMENTS for each of the following items, as applicable:

2.1.1 Illumination levels (include general and task lighting). State design basis such as TI 811-16, MIL-HDBK-1190, I.E.S., Definitive Drawings, etc.

2.1.2 Installation and equipment standards.

2.1.3 System voltage, low and high.

2.1.4 Emergency lighting and stand-by generation.

2.1.5 Communications to include call systems.

2.1.6 Electronic clock systems.

2.1.7 Electronic security, surveillance and intrusion detection systems.

2.1.8 Audio visual systems to include central TV systems.

2.1.9 Fire/smoke alarm systems.

2.1.10 Lightning protection system.

2.1.11 Static grounding system.

2.1.12 Energy conservation and energy monitoring.

2.1.13 Cable TV.

2.2 Provide brief description of DESIGN OBJECTIVES AND PROVISIONS for the following:

2.2.1 Electrical characteristics (phase, voltage, and number of wires) of circuits to serve load in KVA for the facility. Justification for the type of system proposed (economics or special conditions).

2.2.2 General illumination and task lighting coordinated with interior layouts, safety and security requirements.

2.2.2.1 Tabulation showing room name and number with lighting intensity and type of fixture, either by Standard Drawing Number or Catalog Number, for each room.

2.2.2.2 Provisions for adjustment and/or relamping of light fixtures that may not be readily accessible.

2.2.2.3 Description of exit and emergency lighting system; if none to be provided, so state.

2.2.3 Power requirements, with description of panel, protection devices to be provided, and typical loading of circuits.

2.2.4 Location of special power outlets (voltage, phase, and amperage).

2.2.5 Type of wiring system, such as rigid conduit, electrical metallic tubing, non-metallic sheathed cable, etc., and where proposed to use.

2.2.6 Proposed additions and alternations or special items of design, such as specialized equipment, security requirements, emergency power, etc.

2.2.7 Special communication or electronic requirements.

2.2.8 Type of signal and fire alarm systems.

2.2.9 Telephone requirements will be as provided by the communication officer at each installation. Coordination shall be through HQ USACE for Army projects and AFRCE-CR for Air Force projects.

2.2.10 Define any hazardous areas.

2.2.11 Lightning protection system; if none, so state.

2.2.12 Static grounding system to be installed, if required.

2.2.13 Voltage drop basis for service entrance, panel feeders, and branch circuits.

2.2.14 Emergency power distribution.

2.2.15 Energy Conservation.

2.2.16 Description of systems for enhancement of maintenance and operations, to include systems flexibility.

2.2.17 Cable TV.

2.2.18 Economy of construction/procurement, operation and maintenance: life cycle cost effectiveness.

2.2.19 Energy monitoring and control systems (Requirements shall be coordinated with those lists in Part 2, Chapter 5 - Mechanical.

2.3 Calculations REFER TO CHAPTER VI, "ELECTRICAL", FOR ADDITIONAL CALCULATIONS REQUIRED FOR SPECIFIC ELEMENTS OF DESIGN. (Fully coordinate calculations with those required for exterior electrical.)

2.3.1 Maintained lux (lx) levels in all areas. (Where areas are similar in size and usage, only a typical calculation is required).

2.3.2 Individual circuit and system loads tabulated in amperes for each panel board or switch board.

2.3.3 Transformer, generator, switchboard, and feeder computations indicating all demand, diversity, ambient-temperature or conductor-grouping factors considered in the selection of equipment or conductor sizes.

2.3.4 Calculations will include a fault current and ground fault protection study supporting the interrupting rating chosen for all equipment.

2.3.5 Life cycle cost comparison of alternative illuminating, power and communication systems.

2.3.6 Selective system protection.

2.3.7 Voltage-drop on all service and feeder circuits, and on worst-case branch circuits supplied by each panel board and switch board.

2.3.8 Weight and dimensions of each major item of equipment (supported by manufacturer's names and catalog/model numbers).

2.3.9 Voltage dip calculations for motor starting.

*3. Exterior Electrical Distribution System:

3.1 Include functional and technical requirements for each of the following items as applicable:

3.1.1 Primary source.

3.1.2 Loads and load factors including allowance for future loads.

3.1.3 Installation and equipment standards.

3.1.4 System voltage, low and high.

3.1.5 Stand-by generation.

3.1.6 Low and high voltage switching.

3.1.7 Communications systems.

3.1.8 Electronic security, surveillance and intrusion detection support systems.

3.1.9 Cable TV system.

3.1.10 Energy conservation and energy monitoring.

3.1.11 Power and lighting for site elements.

3.1.12 Cathodic protection.

3.2 Provide brief description of DESIGN OBJECTIVES AND PROVISIONS for the following:

3.2.1 Adequacy of the primary supply at the point of take-off. If primary source is inadequate, state measure(s) proposed to correct the deficiency. Description of power supply (voltage, phase, number and size of conductors) at point of delivery.

3.2.2 Electrical characteristics of the primary extension (voltage, phase, number and size of conductors). Indicate adequacy and corrective action, if necessary, of the existing distribution system at the point of take-off. Indicate characteristics and standards of design for overhead or underground line. Include justification for underground line.

3.2.3 Estimate of total connected load and resulting demand load by applying demand and diversity factors for loads involved. Include any allowances for future loads. Indicate type, number of units, KVA capacity, primary and secondary voltage of the transformer installation proposed. Also indicate types of primary and secondary connection of transformers.

3.2.4 Basis for selection of primary and/or secondary distribution voltage.

3.2.5 Low and high voltage switching.

3.2.6 Type of conductors, such as copper or aluminum, and where they are proposed. Refer to guide specifications for options.

3.2.7 Pertinent standards of design, such as voltage drop, physical characteristics of overhead or underground circuits, type of lighting units, lighting intensities, and type of transformers.

3.2.8 Street lighting, security lighting, parking lot lighting, sidewalk lighting, rail-yard lighting, etc. requirements.

3.2.9 Installation of cathodic protection system, including design values.

3.2.10 Definition of any hazardous areas.

3.2.11 Transmission systems for communications, security, fire, and Utility Monitoring and Control Systems (UMCS).

3.2.12 Emergency power distribution.

3.2.13 Energy conservation.

3.2.14 Description of systems for enhancement of maintenance and operations, to include systems flexibility.

3.2.15 Economy of construction/procurement, operation and maintenance: Life cycle cost effectiveness.

3.3 Calculations REFER TO CHAPTER VI, "ELECTRICAL", FOR ADDITIONAL CALCULATIONS REQUIRED FOR SPECIFIC ELEMENTS OF DESIGN. (Fully coordinate calculations with those required for interior electrical.)

3.3.1 Transformer, generator, switchboard, and feeder computations indicating all demand, diversion, ambient-temperature or conductor-grouping factors considered in the selection of equipment or conductor sizes.

3.3.2 Calculations will include a fault current and ground fault protection study supporting the interrupting rating chosen for all equipment.

3.3.3 Life cycle cost comparison of alternative illuminating, power and communication systems.

3.3.4 Primary selective system protection including recloser and circuit breaker settings.

3.3.5 Voltage-drop on all service and exterior feeder circuits.

3.3.6 Maintained lux (lx) levels in all exterior areas.

3.3.7 Cathodic protection system.

3.3.8 Strength and sag calculations for power lines and poles including conductor sag and clearance, down guy strengths, etc.

3.3.9 Weight and dimensions of each major item of equipment. (Supported by manufacturer's names and catalog/model numbers.)

*4. Economic Justification. Analyses shall be provided on the choice of basic materials, functional systems, and other

design options adequate and in sufficient detail to justify economically the materials, systems, and options selected. An energy impact analysis for all systems or equipment considered will be included. Rationale for selection of reduced-voltage starting equipment shall be specifically stated. Analysis shall reflect a summary of detail system and unit capacity calculations. Suitable documentation shall be provided to:

4.1 Verify that the necessary studies have been made.

4.2 Identify the alternatives considered and summarize results.

4.3 State the decisions made, and

4.4 Indicate the basis for the decisions and determination. Economic studies shall include consideration of maintenance costs for the design life of the structure.

*5. Coordination with installations and availability.

5.1 Telephone system requirements and availability.

5.2 Central TV.

5.3 Power requirements of the installation's service and cleaning equipment.

5.4 Provost marshal or police response to intrusion detection system alarms.

5.5 AR 190-13 intrusion detection system design approvals, when required.

5.6 List any additional criteria needed to complete final design.

CHAPTER 7 - FIRE PEOTECTION AND LIFE SAFETY

*1. This part of the Design Analysis shall be a thorough and complete treatment of fire and life safety. Except for calculations performed under other parts of this Design Analysis, this part shall be sufficient in detail and presentation to be considered as a "Stand-alone" Fire Safety Design Analysis.

*2. Requirements, criteria sources, and references for all design consideration for the following General Parameters shall be included.

2.1 Criteria listing. Manuals, pamphlets, codes, technical books, etc.

2.2 Programmed building classification, types of occupancies and list of hazardous areas/equipment/building contents.

2.3 Type of construction.

2.4 Area separation of structures and exposure protection.

2.5 Type of fire protection.

2.5 Fire fighting support including access and clearances to site and structure.

2.6 Presence of handicapped occupants.

2.7 Relative importance and essentialness of equipment supplies and facilities.

2.8 Priority of fire protection including definition of the following items: size and value of structure or facility, value of the contents, processes or equipment as related to the fire protection available from local fire fighting resources, facility design, and usage.

2.9 Fire protection during construction.

2.10 Adequacy of water supply.

*3. Include FUNCTIONAL AND TECHNICAL REQUIREMENTS for the following items. If the item is not applicable so state.

3.1 Building classification based on U.B.C., occupancy classifications, area limitations. Construction for fire and smoke resistance of the building including roofs, ceiling assemblies, interior and exterior walls, permanent partitions, shafts, location of fire separation walls and partitions, and doors.

3.2 Allowable floor area and building height in accordance with the Uniform Building Code (UBC) based on occupancy classification, construction, separations and fire suppression or protection.

3.3 Exit requirements in accordance with NFPA 101, Life Safety Code (LSC). The design and analysis must address exit types, required exit widths, maximum travel distance for exiting, dead-end distances and common exit paths of travel limitations, arrangement of exits, remoteness of exits, discharge from exits, illumination of exits and exit marking.

3.4 Flame spread and smoke development ratings of interior finishes (to include furnishings)and insulation.

3.5 Building access for local fire department fire fighters.

3.6 Building separation and exposure protection.

3.7 Smoke control methods.

3.8 Fire alarm evacuation systems.

3.9 Fire detection systems.

3.10 Automatic fire extinguishing systems (including occupancy classification for the sprinkler system).

3.11 Standpipes and/or fire hydrants.

3.12 Water supplies to include new or additional storage, pumping, and/or water distribution mains.

3.13 Special hazards and methods of protection.

3.14 Manual fire extinguishing (FE) systems (including F.E. cabinets).

3.15 Seismic design and expansive soils (identify seismic requirements and/or existence of expansive soils).

3.16 Include requirements for force protection (protection of penetrations, access, etc.)

4. Provide brief discussion of DESIGN OBJECTIVES AND PROVISIONS of the following (if the item is not applicable so state):

4.1 Treatment of each potential hazard (including building construction, occupancy, zoning, extinguishment, area separation, detection, alarm, etc.).

4.2 Provision and maintenance of an unobstructed emergency egress system to include consideration for the handicapped.

4.3 Detection, alarm, annunciation for fire and smoke (full coordination between Part V and Part VI of design analysis).

4.4 Fire and smoke control for HVAC systems. (Full coordination for fire and smoke damper locations, zoning, detection, and alarm. Include control sequences for air side HVAC equipment.)

4.5 Water Supplies, including water flow tests at the point of connection for sprinkled buildings (storage, pumping, flows, pressures, etc.).

4.6 Existing fire hydrants.

4.7 Existing fire alarm reporting system information for the new connections.

4.8 Economy of construction and procurement, and life cycle cost effectiveness

4.6 Force protection and anti-vandalism (features included to ensure system integrity and operation).

4.7 Efficiency of fire safety and fire protection features and egress system as incorporated into the building layout including economic tradeoffs involved (support by drawings as appropriate).

5. Design Calculations. Calculations shall be included for the following items. (Where calculations have been accomplished under other parts of this design analysis, the part and page number shall be referenced and a summary of results and conclusions provided under this part.)

5.1 Complete exit requirement calculations based on LSC.

5.2 Allowable floor area and building height calculations based on UBC.

5.3 Water supply calculations indicating the adequacy of the design to meet sprinkler and hose stream demands. Calculations must be based on residual static pressures and flow data obtained from water flow tests.

5.4 Sprinkler calculations to determine water flow and pressure demands.

5.5 Fire alarm system calculations for elements such as, wire sizing, battery, and alarm annunciator sound level.

5.6 Complete hydraulic design calculations for detailed sprinkler and Aqueous Film Forming Foam (AFFF).

5.7 Layout and sizing of special fire extinguishing systems, such as carbon-dioxide, halon, and AFFF (low pressure foam system).

*6. Coordination with installation or outside agencies.

6.1 List additional criteria and information needed to complete final design.

6.2 Fire fighting support to include tie-ins with local fire department alarm and annunciation systems.

6.3 Adequacy of water supply, including flow tests.

6.4 Inspection and testing of systems performance.

6.5 Obtain the specific fire alarm type(s), fire protection and central reporting requirements of the Installation’s Fire Marshall/Chief.

7. Fire Protection Drawings. The following information is provided to organize the fire protection requirements on project drawings in order to reduce confusion to designers, reviewers and bidders:

Item	DRWGS	REMARKS
Fire Protection Plan (FPP)	ARCH	
Rated Firewalls	FPP	
Egress System Requirements (NFPA 101)	FPP	
Sprinkler Areas	FPP	Indicated by footnote if entire bldg is sprinklered or show sprinklered areas by cross hatching or zip-a-tone type screening.
Sprinkler System Design	MECH	Show on separate drawing identified as Mech Fire Protection (MFP) Plans
Sprinkler System by Performance Specification		Show hazard classification, seismic zone, type of heads, sprinkler riser, fire dept connection, water flow alarm, drain discharge, demand areas, design density and water supply (test) data on FPP. RFP's require sprinkler systems to be shown on the mech drawings.
Aqueous Film Forming Foam System (AFFF)	MECH	Provide reference note on the FPP. Provide design on MFP plan.
Other Fire Extinguishing Systems	MECH	Provide note on FPP.
Fire Alarm Stations (Pull	ELECT	Show functional layout on fire alarm riser diagram(s). Provide note on FPP.

Boxes)		
Signaling Devices (bell, chimes, gongs, visual alarms, etc.)	ELECT	Show functional layout on fire alarm riser diagram(s). Provide reference note on FPP.
Fire Detection * Devices (heat, smoke, UV, etc.)	ELECT	Show functional layout on fire alarm riser and mech control diagrams. Provide reference note on FPP.
Fire Detection zones (as reqd)	FPP	
Exit Lights	FPP	Provide location reference only.
	ELECT	Detailed location, circulating, scheduling, detailing, etc.
Fire Extinguisher (cabinets)	FPP	
Fire Rated Doors, Frames & Hardware	ARCH DOOR SCHED	Provide reference note on FPP.
	ELECT	Provide reference note on FPP.
Fire Alarm Control Panels	MECH	
Fire Dampers	MECH (DUCT-WORK)	
Fire Stopping (for all fire wall penetrations)	ARCH OTHER PENETR	
	CIVIL	
Post Indicator	CIVIL	
Fire Hydrants		

* For smaller projects, the Fire Detection Devices should be located on the plans; for larger, more complex projects it may be more meaningful to reference the appropriate specifications for these devices. Or, the designer may wish to show the location of smoke detectors such as duct-mounted type on the drawings and reference the specifications for locations of the heat detectors. In any case, careful coordination of the drawings and specifications is required.

CHAPTER 8 - PHYSICAL SECURITY

1. Security engineering design includes measures such as fencing, patrol roads, guard facilities, vehicular barriers, blast standoff and clear zones, Architectural building layout for security, vaults, eavesdropping countermeasures, protective lighting, security systems, locks, arms rooms, entrances, classified material security, surveillance and aggressor entry resistance, blast resistant structural systems, mechanical and electrical systems, ballistics resistance, and retrofit upgrade of existing facilities. Design guidance is in references ER 1110-345-700, Part 2, Chapter 8, TM 5-853-1, TM 5-853-2, and TM 5-853-3, TM 5-853-4.

*2. Identify the assets to be protected, the design threat(s) to these assets, and the level(s) of protection required. Document efforts taken to coordinate with the instillation security plan. List the design criteria. Identify additional criteria needed for final design. Determine if the Protective Design Center of Expertise and Intrusion Detection System Center of Expertise should be used.

*3. The design analysis in this chapter shall be sufficient to identify all the protective measures and procedures required for protection of project assets against their design basis threat. The design of components of the protective measures should be more fully addressed in the design analysis Part 2, Chapters 1 through 6 for the major design disciplines, and cross-referenced herein.

4. The design analysis shall address economy of construction, life-cycle cost effectiveness in accordance with TM 5-802-1.

PART 3 - O&M PROVISIONS.

1. Reference ER 1110-345-700, Part 3, 0&M Provisions).

2. Using Service Responsibilities for O & M. The following are using service responsibilities for O&M that should be considered by the design agency during the design development process:

2.1 Control Responsibilities

2.1.1 Parking allowances and assignment

2.1.2 Pavement and floor loading.

2.1.3 Spare parts, equipment, consumables, and miscellaneous storage.

2.1.4 Energy use

2.1.5 Site access restrictions

2.1.6 Force protection.

2.2 Service Responsibilities

2.2.1 Access-egress maintenance

2.2.2 Landscape maintenance

2.2.3 Snow and ice removal

2.2.4 Housekeeping, trash collection and disposal.

2.2.5 Signage

2.2.6 Mail handling, shipping and receiving

2.2.7 Food service and supply

2.2.8 Health and sanitation

2.2.9 Reproduction (copy) service

2.2.10 Vending (state blind agencies and others)

2.2.11 HVAC

2.2.12 Electrical and communication services

2.2.13 Fire protection

2.2.14 Force protection

2.2.15 Shop support

2.2.16 Plumbing systems

2.2.17 Lifts, hoists, cranes, and elevators

2.2.18 Compressed air and vacuum systems

2.2.19 Fuel storage and dispensing systems

2.2.20 Industrial gas systems

2.2.21 Treatment facility operation and maintenance

2.2.22 Residuals disposal and manifesting

2.2.23 Permit compliance monitoring

2.2.24 Extraction/injection remediation system maintenance

2.2.25 Worker safety and environmental health

3 Provisions for O&M Enhancement and Cost Reduction. The following are provisions for O&M enhancement and cost reduction that should be considered by the design agency during the design development process:

3.1 Control Related.

3.1.1 Preventive overloading factors

3.1.2 Food service efficiency maximizes (preparation, serving, seating, and dish washing)

3.1.3 HVAC efficiency maximizes (sub- and main plant)

3.1.4 Lighting efficiency maximizes (intensities and switching)

3.1.5 Communications efficiency maximizes

3.1.6 Elevator efficiency maximizes

3.1.7 System expandability and flexibility

3.2 Service Related

3.2.1 Below grade flood protection

3.2.2 Above grade solar, water, and wind protection and resistance

3.2.3 Finish materials, textures and colors

3.2.4 Window washing provisions

3.2.5 Provision for cleaning equipment

3.2.6 Vibration and expansion contraction controls

3.2.7 Energy conservation and pollution control measures

3.2.8 Access to mechanical systems: HVAC, elevators, plumbing, process, and special equipment

3.2.9 Provisions for building and system commissioning and testing, adjusting, and balancing of mechanical, electrical and communication systems

3.2.10 Relamping and lighting relocation

3.2.11 Electrical distribution allowance for future loads

3.2.12 Emergency power system testing, and monitoring power quality

3.2.13 Vandalism resistance

3.2.14 Force protection

3.2.15 Confined space reduction/elimination or identification

3.2.16 Toxic or hazardous pollutant sources and exposure potentials

APPENDIX A

PAVEMENT DESIGN

(Note: See AEIM Chapter XIII, Geotechnical, for pavement design requirements.)

APPENDIX B

FOUNDATION DESIGN ANALYSIS

(Note: See AEIM Chapter XIII, Geothecnical, for foundation design requirements.)

Appendix C

PROJECT PHASING DATA

PHASING DATA FOR _____

PROJECT MANAGER _____

1. UTILITY OUTAGES:

a. Water, Sewer, Gas

(1) MINIMUM DAYS OF PRIOR NOTICE _____

(2) MAXIMUM TIME OF OUTAGE _____

(3) WEEKENDS ONLY? YES _____ NO _____

(NOTE: STANDARD PARAGRAPH ON OUTAGES CONTAINS THE STATEMENT THAT "TAPPING WITHOUT OUTAGES SHALL BE ACCOMPLISHED WHERE POSSIBLE, IN ACCORDANCE WITH GOOD COMMERCIAL PRACTICE.")

b. ELECTRICAL.

(1) MINIMUM DAYS OF PRIOR NOTICE _____

(2) MAXIMUM TIME OF OUTAGE _____

(3) WEEKENDS ONLY? YES _____ NO _____

2. STREET CLOSURES: (EXAMPLE: FOR UTILITY LINE CROSSING)

a. MINIMUM DAYS OF PRIOR NOTICE _____

b. NUMBER OF LANES TO BE KEPT OPEN _____

c. WORK MUST BE ACCOMPLISHED BY TUNNELING? YES__ NO__

3. ANY REQUIRED SEQUENCE OF WORK? _____

4. ANY KNOWN WORK RESTRICTIONS? _____

a. JOINT OCCUPANCY RESTRICTIONS _____

b. WORKING HOUR RESTRICTIONS_____

c. SECURITY RESTRICTIONS _____

d. ACCESS RESTRICTIONS _____

e. NOISE LEVEL RESTRICTIONS _____

f. OTHER RESTRICTIONS _____

5. ANY REQUIRED BENEFICIAL OCCUPANCY DATES OR PROJECT COMPLETION DATES?

6. USERS DAILY ACTUAL DAMAGE IF BOD IS NOT MET, WITH DOCUMENTATION.

7. ARE THERE ANY SPECIAL FABRICATIONS OPERATIONS OR ITEMS OF GOVERNMENT-FURNISHED EQUIPMENT?

8. ARE THERE ANY ASBESTOS CONTAINING MATERIALS IN LOCATIONS WHERE CONTACT WORK IS TO BE PERFORMED? YES _____ NO _____

IF THE ANSWER TO THE ABOVE QUESTION IS YES, HAS AN INDUSTRIAL HYGIENE ASBESTOS SURVEY OF THE CONTRACT WORK AREA BEEN CONDUCTED AND AN ASBESTOS SURVEY REPORT PREPARED? YES___ NO___

IF AN ASBESTOS SURVEY REPORT HAS BEEN PREPARED, REQUEST YOU ATTACH A COPY TO THIS FORM. QUESTIONS 3-6. IF COMPLEX, WRITE IN "COORDINATION REQUIRED". IF UNKNOWN, WRITE IN "UNKNOWN". IF THE RESPONSE IS CONTINUED ON THE BACK OF THIS SHEET OR ATTACHED SHEET, PLEASE SAY SO.

Appendix D

CHECKLIST OF ITEMS GOVERNING DESIGN FOR THE PHYSICALLY HANDICAPPED

FOR USE IN PROJECT DESIGN AND DESIGN REVIEW

PROJECT NUMBER _____ TYPE OF FACILITY _____

LOCATION _____

_____

OPEN TO PUBLIC: YES___ NO___ ESTIMATED NUMBER OF VISITORS_____

DESTINATIONS: _____

CIVILIAN OPERATING PERSONNEL: YES___NO___ESTIMATED NUMBER:___

TYPES OF FUNCTIONS THEY WILL PERFORM: _____

_____

ESTIMATED NUMBER OF PARKING SPACES: VISITOR____STAFF____OTHERS

---

*MARK YES OR NO FOR ITEMS WHICH FOLLOW AS APPROPRIATE, OR WRITE N/A UNDER "NO" FOR NON-APPLICABLE.

	YES*	NO*
1. Identifications of Accessible Facilities.		
a. Areas and features identified by International Symbol	____	___
b. Proper specification of International Symbol	____	___
c. Proper location of the symbol, between 815 mm to 1065 mm high	____	___
d. Adequate directional and supplemental information	____	___

		YES*	NO*
2.	Identification for the Visually Handicapped.		
a.	Facilities identified by sight and touch signs	____	___
b.	Proper specification of signs	____	___
c.	Lighted inside, and outside in areas accessible after dark	____	___
d.	Proper location of signs, between 1015 mm and 1320 mm high	____	___
e.	Raised lettering for interpretative material	____	___
f.	Tactile door hardware to identify hazards	____	___
g.	Textured warning strips at head of stairs and ramps	____	___
h.	Proper specification of elevator arrival signals, controls, and call buttons	____	___
I.	Raised numbers on inner-facing elevator door jambs	____	___
3.	Signals for Persons with Auditory Handicaps.		
a.	Elevator signals to visually identify arrival of cars	____	___
b.	Warning signals with visual as well as audible devices	____	___
4.	Site Design.		
a.	Access to at least one primary entrance	____	___
b.	Access to outdoor areas used by general public	____	___
c.	Grading to attain level access and egress to and from entrance	____	___

	YES*	NO*
Site Design. (Continued)		
d. Directional signs at major points of entry to the site	____	___
e. Access-egress routes lighted to 55 lux if used after dark	____	___
f. Accessible toilets, water dispensers, and phones where such facilities are provided in public areas	____	___
g. Solutions with minimal impact on environmental features	____	___
h. Proper location of interpretative displays	____	___
5. Drop-off and Pick-up Zones.		
a. One zone provided where high rate of pedestrian traffic will occur	____	___
b. Zone within 15 meters maximum of a primary entrance	____	___
c. Zone width 300 mm, length for one car minimum, level except for drainage	____	___
d. Vertical posts to separate functions, or at least one curb-ramp	____	___
e. Sign to limit use to pedestrian functions	____	___
6. Parking spaces		
a. One space in areas having up to 20, one additional space for each 50 additional spaces or increment	____	___
b. Spaces within 30 meters of one accessible entrance	____	___
c. Space wait, on common level except for drainage	____	___

Parking spaces (Continued)	YES*	NO*
d. Access to walk does not go behind parked cars or across driveway	____	___
e. Wheel stops to separate functions, or one curb-ramp per car	____	___
f. 1.8 meter clear walkway in front of parked cars	____	___
g. Spaces identified and reserved with signs above ground	____	___
7. Curb-Ramps.		
a. Provided where walks and curbs are being constructed or reconstructed in accessible areas	____	___
b. 1.5 meter wide with slope of 1-in-12, blending to common level with street and walk	____	___
c. Sides flared with slope approximating 1-in-12	____	___
d. 1.2 meter clear walkway at head clear of obstructions	____	___
e. Properly located at street intersections and elsewhere to assure safety	____	___
f. Marked cross-walk and traffic warnings to ensure unobstructed passage	____	___
g. Firm, non-slip surface	____	___
8. Walks.		
a. Provided for access and agrees to and from usable entrances	____	___
b. 1.8 meter wide with slope no greater than 1-in-24 blending to common level with other surfaces	____	___

Walks. (Continued)	YES*	NO*
c. Continuous surface uninterrupted by abrupt changes	____	___
d. 1.8 by 1.8 meter level rest areas at 18 meters intervals when slopes exceed 1-in-30	____	___
e. At doorways, 1.8 by 1.8 meter level landing extending 460 mm beyond strike jamb	____	___
f. Fixed, firm, and non-slip surfaces, crowned for drainage	____	___
g. If grates are used, no openings between bearing bars greater than 9.5 mm with bars set perpendicular to path of travel	____	___
h. Ground surface graded to walk and compacted to prevent drop-off	____	___
I. Guards where grounds drop off or recede at greater than 1-in-6 slope	____	___
j. Lighting, signs, and other elements set back at least 300 mm	____	___
k. Landscape elements planted to allow 300 mm clearance on side, 2 meters vertical clearance	____	___
l. Adjacent rest areas where walks exceed 60 meters in length	____	___
9. Ramps.		
a. Provide where changes in level exceed allowable slope for walks	____	___
b. 1.8 meters wide with slope no greater than 1-in-12 blending to common level with landings	____	___
c. 1.8 by 1.8 meter level landing at top and bottom	____	___

Ramps. (Continued)	YES*	NO*
d. Like landings at 9 meters intervals for rest and safety	_____	_____
e. At doorways 1.8 by 1.8 meter level landing extending 460 mm beyond strike jamb	_____	_____
f. Fixed, firm, and non-slip surfaces with adequate drainage	_____	_____
g. Protection for ramps exposed to freezing weather	_____	_____
h. Textured or color surface to aid identification in addition to warning strips	_____	_____
10. Stairs.		
a. Provided in addition to ramps (preferred)	_____	_____
b. Minimum 1.2 meter wide with no less than 3 consecutive riser	_____	_____
c. 1.8 meter maximum rise between landings, 1.2 meter where exposed to the elements and unprotected	_____	_____
d. Risers between 125 mm and 175 mm, treads between 430 mm and 280 mm	_____	_____
e. Proportions uniform throughout any one stair	_____	_____
f. Solid risers or risers with nosing having 45 degrees bevel below	_____	_____
g. Non-slip nosing of contrasting color, 25 mm wide on both riser and tread edge	_____	_____
h. Treads exposed to weather pitched for drainage	_____	_____
I. Protection for stairs exposed to freezing weather	_____	_____

		YES*	NO*
11.	Guards and Handrails.		
a.	Guards 1070 mm high along open-sided floor or walk areas	____	___
b.	Guards 815 mm high along open-sided stairs and ramps	____	___
c.	100 mm high curbs in open guards with intermediate filler to prevent fall-through	_____	___
d.	View ports in solid guards 760 mm to 1000 mm high	____	___
e.	Handrails on both sides of ramps and stairs, 815 mm to 865 mm high	____	___
f.	In outdoor areas, handrails on at least one side where ramps and stairs have no drop-off on sides	____	___
g.	Intermediate handrail for children	____	___
h.	Handrails extended 460 mm beyond top and bottom of stair or ramp at 915 mm high where possible	____	___
i.	Round or oval handrails, 32 mm to 38 mm outside diameter with 40 mm clear between wall or guard	____	___
j.	Handrails terminate into wall, guard or newel	____	___
k.	Handrails mounted to withstand 890 Newton applied in any direction	____	___
12.	Trails.		
a.	Trails made accessible where provided for for general public	____	___
b.	Warning signs and level turn-a-round space where hazards cannot be avoided	____	___
c.	Loop-back and level terrain used		
d.	Access identified at head of trail with directional information along route	____	___

	YES*	NO*
13. Building Design.		
a. At least one primary entrance accessible	_____	_____
b. Other entrances accessible (preferred)	_____	_____
c. Identification of all entrances (and exits) or signs to indicate location of accessible entrance	_____	_____
d. Elevator, when provided, accessible from entrance	_____	_____
e. Toilets, drinking water dispensers, and phones near entrances and assembly areas	_____	_____
f. Spaces open to the public designed to accommodate the handicapped	_____	_____
g. Accessible work stations based on function to be performed	_____	_____
h. Directional information with primary entrance to locate accessible areas and features	_____	_____
14. Doors and Doorways.		
a. Minimum door width, 914 mm (36")	_____	_____
b. Maximum push-pull on exterior doors of 65 Newton; interior 22 Newton	_____	_____
c. 4-6 second closing delay for automatic operators used to compensate for high pressures	_____	_____
d. Level-type handles or horizontal push bars centered 915 mm to 1065 mm high	_____	_____
e. Vision panels with bottom 915 mm above floor when provided	_____	_____
f. 400 mm kickplates on doors or materials to withstand abuse	_____	_____

		YES*	NO*
g.	Door pulls on doors without self-closing devices	_____	_____
h.	Level floor, extending 1.8 meter on pull side, 1.2 meter on opposite side	_____	_____
i.	Level floor extending 460 mm beyond strike jamb on pull side	_____	_____
j.	Series doors 2 meters apart, minimum	_____	_____
k.	6.5 mm maximum threshold on exterior, eliminated where possible on interior	_____	_____
l.	Doormats no more than 6.5 mm high, grate bearing bar openings 9.5 mm maximum, set perpendicular to path of travel	_____	_____

15. Corridors, Floors, and Lobbies.

a.	Corridor width, 1525 mm clear	_____	_____
b.	Lobbies large enough to allow maneuverability	_____	_____
c.	Corridors free of protruding hazards	_____	_____
d.	Floors on common level or connected by ramps and stairs blending to a common level	_____	_____
e.	Ramps, stairs, and railings in accordance with respective criteria	_____	_____
f.	Proper specification of carpet, when used	_____	_____
g.	Information/checkout counters 890 mm high; writing counters 790 mm high	_____	_____
h.	Lock boxes between 460 mm and 1220 mm high with space in front	_____	_____
i.	Proper location of interpretative material	_____	_____

		YES*	NO*
16.	Toilet Rooms		
a.	One room for each sex on each applicable floor	_____	_____
b.	No travel in excess of 45 meters with directional information	_____	_____
c.	Vestibule clearance for wheelchair passage	_____	_____
d.	Floor level with corridor	_____	_____
e.	One toilet compartment to accommodate wheelchair inside with door closed	_____	_____
f.	Out-swinging door no less than 813 mm (32") wide (864 mm (34") preferred)	_____	_____
g.	1.2 meter between front of compartment and opposite wall	_____	_____
17.	Drinking Water Dispenser.		
d.	Dispensers centered in alcove; 1.8 meters wide for side approach, 915 mm wide for frontal	_____	_____
e.	Up-front spouts and controls, hand-operated	_____	_____
18.	Public Telephones.		
a.	One accessible phone with hearing aid where phones are provided	_____	_____
b.	Volume control or inductive coil in receiver with instructions	_____	_____
c.	815 mm to 914 mm cord, push-button dial	_____	_____
d.	Highest operating mechanism, 1.2 meters above floor, maximum	_____	_____
e.	610 mm clear of restriction on each side	_____	_____
f.	Alcoves 1.2 meter deep, 1.2 meter wide with 864 mm (34")door or opening width	_____	_____

	YES*	NO*
19. Elevators.		
a. One elevator for 2 or more operating levels used by public	_____	_____
b. Stop within 6.5 mm to 12.5 mm maximum of facility floor levels	_____	_____
c. Cab 1525 mm deep, 1725 mm wide with handrails at 915 above floor	_____	_____
d. Door clear opening, 915 mm (36") minimum, 6 to 10 second closing delay with safety reversing devices	_____	_____
e. Cab controls between 760 mm and 1370 mm high; emergency call box no higher than 1015 mm	_____	_____
f. Lobby call buttons 1.2 meter high, maximum	_____	_____
g. Symbol, sight-touch identification, and signals in accordance with criteria	_____	_____
20. Switches and Controls.		
a. Switches and controls between 1015 mm and 1220 mm above floor	_____	_____
b. Same as above for thermostats and fire alarms in areas subject to handicapped use	_____	_____
c. Controls operable by 35 Newton force, maximum	_____	_____
d. Electrical outlets and adjustable vents 460 mm above floor, minimum	_____	_____
21. Assembly Seat Accommodations.		
a. One wheelchair space and one wide seat in areas having up to 20; one additional space and seat for each 60 additional seats or increment	_____	_____
b. Additional spaces in high-use area	_____	_____

	YES*	NO*
c. Integral part of assembly area floor plan with choice of viewing positions	_____	_____
d. Wheelchair spaces 865 mm wide, 1920 mm deep, on level floors with access	_____	_____
e. Seats 610 mm wide with 710 mm clear in front for persons with crutches or braces	_____	_____
f. Tables, 790 mm high overall, 750 mm clear underneath extending 610 mm deep by 915 mm wide	_____	_____
g. Identification of designated handicapped space keyed to directional sign at entrance	_____	_____
22. Dining Areas.		
a. Passage lanes, 1070 mm clear through food service area with 1525 mm square turn-a-round spaces	_____	_____
b. 1.8 meter passage lanes between table without chairs	_____	_____
c. Display shelves and dispenser within reach, tray slide at 865 mm maximum	_____	_____
d. Dining area spaces provided on minimum basis prescribed for assembly areas	_____	_____
e. Tables 950 mm clear underneath for use by everyone	_____	_____
f. Identification of accessibility and sign describing features in food service and dining area	_____	_____
23. Shop and Craft Areas.		
a. Work tables 950 mm clear underneath	_____	_____
b. Passage lanes 1070 mm clear of projections	_____	_____
	YES*	NO*

c. Work space between parallel tables, 1525 mm wide _____ _____

d. Additional requirements investigated _____ _____

24. Library and Office Areas.

a. 1070 mm passage lanes between book stacks or files with 1525 mm square turn-a-round spaces at aisle ends _____ _____

b. Major passage lanes, 1525 mm wide _____ _____

APPENDIX E

QUALITY CONTROL PLAN

(Note: AE’s Quality Control Plan for design work performed under contract with District or product engineering QCP for design performed by District in-house personnel.)

CHAPTER X

COST ENGINEERING GUIDE FOR MILITARY CONSTRUCTION

Table of Contents

1. REFERENCES:
   - 1.1 EI 01D010
   - 1.2 Construction Technical Letter (CTL) 90-1
   - 1.3 ER 1110-1-1300
   - 1.4 ER 1110-3-1300
   - 1.5 ER 1110-2-1302
   - 1.6 ER 1110-3-1301 (DRAFT)
   - 1.7 TI 802-01
   - 1.8 Memorandum, Cost Control During Design.
   - 1.9 Memorandum, Military Design and Cost Engineering

2. COST ESTIMATES

3. COST GROWTH

4. AF FORM 1178 AND ARMY ENG FORM 3086

5. BASELINE COST ESTIMATES

6. SUBMITTALS
   - 6.1 Requirements and Management Plan (RAMP - Air Force)
   - 6.2 Schematic Design Submittal (Army)
   - 6.3 Project Engineering Phase, Code 3 (Army)/Project Definition (Air Force)
   - 6.4 Concept Design (Army)/Preliminary Design (Air Force)
   - 6.5 Preliminary Design (Army)/Interim Design (Air Force)
   - 6.6 Final Design
   - 6.7 Corrected Final Design
   - 6.8 Bid Opening Estimates

CHAPTER X

COST ENGINEERING GUIDE FOR MILITARY CONSTRUCTION

1. **REFERENCES**:

1.1 **EI 01D010**: Construction Cost Estimates, 1 September 1997.

1.2 **Construction Technical Letter (CTL) 90-1**: Management of the MILCON Planning and Execution Process, 6 March 1990.

1.3 **ER 1110-1-1300:** Engineering and Design COST ENGINEERING POLICY AND GENERAL REQUIREMENTS, 26 March 1993.

1.4 **ER 1110-3-1300**: Engineering and Design MILITARY PROGRAMS COST ENGINEERING, 30 July 1993.

1.5 **ER 1110-2-1302:** Engineering and Design CIVIL WORKS COST ENGINEERING, 31 March 1994.

1.6 **ER 1110-3-1301 (DRAFT):** Engineering and Design COST ENGINEERING POLICY AND GENERAL REQUIREMENTS FOR HAZARDOUS, TOXIC AND RADIOACTIVE WASTE (HTRW) COST ESTIMATES, 31 May 1997.

1.7 **TI 802-01:** Technical Instructions for Code 3 Design With Parametric Estimating, 15 April 1998.

1.8 **Memorandum** from CESWD-ETE-T dated 5 November 1997, subject: Cost Control During Design.

1.9 **Memorandum** from CESWD-ET/CESWD-PM dated 7 September 1995, subject: Military Design and Cost Engineering.

2. **COST ESTIMATES**. All military cost estimates shall be prepared in accordance with EI 01D010 or the District Cost Estimating Guide and will be bound (or stapled) separately from other submittal data. If the District prepares a cost estimating guide to supplement EI 01D010, the Cost Engineering Branch will be responsible for its preparation within the EI guidelines. The Estimating Guide of each District (if prepared) will supplement Chapter X of the Architectural and Engineering Instruction Manual and will

apply to the preparation of cost estimates, either in-house or A-E, for all military construction. All cost estimates shall be prepared and organized according to the applicable work breakdown structure. Each district will furnish to CESWD Cost Engineering a copy of the Estimating Guide and all updates thereto. The A-E shall be aware of and take such precautionary measures as necessary to maintain the confidential nature of all cost estimates. In general, cost estimates, at the earliest practical stage of project development, are to be prepared using the latest version of MCACES (Micro Computer Aided Cost Estimating System). When MCACES is waived on a given project by formal memorandum issued by the District Cost Engineering Branch, the cost estimate shall be prepared in accordance with EI 01D010 or the District Cost Estimating Guide. Cost estimates are to be bound (or stapled) separately from other submittal data.

3. **COST GROWTH**. The unit costs of all construction cost estimates submitted shall reflect the current pricing at the time of submittal. For all estimates prior to the Advanced Final Design, cost growth (escalation) - using the Tri-Services Index - is to be added to the total project cost, projecting costs to the assumed midpoint of construction. For Final Design and later cost estimates, cost growth may or may not be added as directed by the District Chief, Cost Engineering Branch.

4. **AF FORM 1178 AND ARMY ENG FORM 3086**. For all Air Force submittals except bid opening, an AF Form 1178 cost estimate shall be prepared and submitted with the detail cost estimate. For Army projects, an ENG Form 3086 cost estimate shall be prepared and submitted with the detail cost estimate for all submittals through 35% design (Concept). Guidance for preparing the 1178 or 3086 cost estimates will be provided by the District Chief, Cost Engineering Branch.

5. **BASELINE COST ESTIMATES.** A baseline cost estimate is required early in the design process, usually at the Project Engineering Phase, Code 3 (Army) or Project Definition (Air Force) level of design. This parametric cost estimate is to be a detail parametric, budgetary-type cost estimate using MCACES version 5.3 (or later), TRACES PBMW version 3.0 (or later) or PACES (latest version). All parametric cost estimates prepared using either TRACES PBMW or PACES must be exported to MCACES and printed from MCACES. The estimate

must be itemized according to the approved Tri-Services work breakdown structure to at least the sub-system level and edited to represent project specific items as defined by the designers. This cost estimate must be structured to allow comparison of costs to the primary line items as shown in the DD 1391. The cost estimate is to be used by the designers as a design guide throughout the design phase. If changes to the design are required, the cost engineer must update the baseline estimate immediately. The construction cost estimate is to be a “live” estimate that keeps the user informed of the anticipated project costs. Anticipated costs above the construction cost limitation (CCL) must be resolved between the user, the designer and the cost engineer. Separable elements (potential additives/options) may have to be identified early on in order to keep the project within the funds available.

6. **SUBMITTALS**. For IFB projects, the required level of design completion for each submittal may vary depending upon the project. The District Project Manager will provide the level of design required for each submittal. Some projects may require different or additional submittals and will require separate guidance on a case-by-case basis. In general, the following types of detail estimates are required:

6.1 **Requirements and Management Plan (RAMP) (3%) (Air Force)**. When this submittal is required, a detail parametric, budgetary-type cost estimate is required. The estimate must be itemized according to the approved Tri-Services work breakdown structure to at least the sub-system level and edited to represent project specific items as defined by the designers. This cost estimate must be structured to allow comparison of costs to the primary line items as shown in the DD 1391.

6.2 **Schematic Design Submittal (5%) (Army)**. Unless directed otherwise, no cost estimate is required with this submittal.

6.3 **Project Engineering Phase, Code 3 (Army)/Project Definition (Air Force)(10%-15%)**. When this submittal is required, a detail parametric, budgetary-type cost estimate using MCACES version 5.3 (or later), TRACES PBMW version 3.0 (or later) or PACES (latest version) is required. All

parametric cost estimates prepared using either TRACES PBMW or PACES must be exported to MCACES and printed from MCACES. If a detailed parametric cost estimate was previously prepared at an earlier stage of design, it may be used and updated based on current information. The estimate must be itemized according to the approved Tri-Services work breakdown structure to at least the assembly category level and edited to represent project specific items as defined by the designers. The designers must identify their intended design in sufficient detail that the cost engineer can prepare the cost estimate outline with related costs. This cost estimate must be structured to allow comparison of costs to the primary line items as shown in the DD 1391. This submittal shall also include a completed AF Form 1178 or, for the Army, an ENG Form 3086, cost estimate that is based upon the parametric budgetary-type estimate. Submittal of the ENG Form 3086 electronically by the district cost engineer will usually be required. As a part of this submittal, an electronic copy of the MCACES project file (with related databases) on a 3.5" diskette is to be furnished to the district cost engineer.

6.4 **Concept (Army)/Preliminary (Air Force)(30%-35%)**. When this submittal is required, a detail parametric, budgetary-type cost estimate using MCACES version 5.3 (or later), TRACES PBMW version 3.0 (or later) or PACES (latest version) is required. All parametric cost estimates prepared using either TRACES PBMW or PACES must be exported to MCACES and printed from MCACES. If a detailed parametric cost estimate was previously prepared at an earlier stage of design, it may be used and updated based on current information. The estimate must be itemized according to the approved Tri-Services work breakdown structure to at least the assembly category level and edited to represent project specific items as defined by the designers. The designers must identify their intended design in sufficient detail that the cost engineer can prepare the cost estimate outline with related costs. This cost estimate must be structured to allow comparison to the primary line items as shown in the DD 1391. This submittal shall also include an ENG Form 3086 cost estimate that is based upon the parametric budgetary-type estimate. Electronic submittal of the ENG Form 3086 by the district cost engineer will usually be required. As a part of this submittal, an electronic copy of the MCACES project file (with related databases) on a 3.5" diskette is to be furnished to the district cost engineer.

6.5 **Preliminary (Army)/Interim (Air Force) Design (60%-65%)**. When this submittal is required, a detail parametric, budgetary-type cost estimate is required. The detailed parametric cost estimate previously prepared at an earlier stage of design and exported into MCACES may be used and updated based on current information or a new cost estimate may be developed using MCACES. The estimate must be itemized according to the approved Tri-Services work breakdown structure to at least the assembly category level and edited to represent project specific items as defined by the designers. The designers must identify their intended design in sufficient detail that the cost engineer can prepare the cost estimate outline with related costs. This cost estimate must be structured to allow comparison of costs to the primary line items identified in the DD 1391. As a part of this submittal, an electronic copy of the MCACES project file (with related databases) on a 3.5" diskette is to be furnished to the district cost engineer.

6.6 **Final Design (90%-95%)**. This submittal is essentially a complete design except for resolution of final design comments and amendments issued after advertisement but before bid opening. A completed bid schedule and the work sheet used to calculate the liquidated damages is required with this cost estimate. The proposed bid schedule will be coordinated with the District Cost Engineering Branch prior to preparation of the cost estimate. The bid schedule must identify each primary line item (primarily buildings) in the 1391 as a separate bid item. A detailed cost estimate must be prepared using MCACES or the detailed parametric cost estimate previously prepared at an earlier stage of design and exported into MCACES may be used, and updated based on current information. The estimate must show detail cost entries with quantities, related crews, equipment and material costs. This cost estimate must be structured to allow comparison of costs to the primary line items identified in the DD 1391. As a part of this submittal, an electronic copy of the MCACES project file (with related databases) on a 3.5" diskette is to be furnished to the district cost engineer.

6.7 **Corrected Final Design (100%)**. This estimate shall be a revision of the Final cost estimate prepared in accordance with 6.6 above. The revised cost estimate - to include a

completed bid schedule and the liquidated damages work sheet - shall include appropriate costs as required by the final review comments. Five copies will be submitted with the Corrected Final Design and related data. As a part of this submittal, an electronic copy of the MCACES project file (with related databases) on a 3.5" diskette is to be furnished to the district cost engineer.

6.8 **Bid Opening Estimates**. The original and four copies of the bid opening estimate, prepared in accordance with 6.7 above, based on updated final project design and corrected to include all amendments, shall be received in the District office with the transmittal letter no later than five working days prior to bid opening or as directed by the contracting officer. A copy of the bid schedule published in the specifications shall be completed and furnished with the cost estimate. As a part of this submittal, an electronic copy of the MCACES project file (with related databases) on a 3.5" diskette is to be furnished to the district cost engineer.

CHAPTER XI

DESIGN SUBMISSION REQUIREMENTS

Table of Contents

1. INTRODUCTION
   1.1 Applicable Submission Phases

2. ARMY/AIR FORCE PROJECTS GENERAL SUBMISSION PHASES
   2.1 Requirements & Management Plan (RAMP)(3%)(AIR FORCE)
   2.2 Schematic Submittal (5%)(ARMY)
   2.3 Preconcept Design (10%)(ARMY)
   2.4 Charette Requirements
   2.5 Project Definition (10%-30%)(AIR FORCE)
   2.6 Project Engineering/Code 3 (10%-15%)(Army)
   2.7 Concept Design (35%)(ARMY)
   2.8 Preliminary Design (60%)
   2.9 Final Design
   2.10 Corrected Final Design (100%)

3 MEDICAL PROJECT REQUIREMENTS (ARMY/AIR FORCE)

4 GENERAL DESIGN DOCUMENT REQUIREMENTS
   4.1 Drawings
   4.2 Specifications
   4.3 Design Analysis
   4.4 Cost Estimate
   4.5 Color Boards
   4.6 Structural Interior Design (SID)
   4.7 Comprehensive Interior Design (CID)
   4.8 Submittal Register (ENG Form 4288)
   4.9 DD Form 1354 "Transfer & Acceptance of Military Real Property"
   4.10 Construction Schedule
   4.11 Architectural Sketches/Renderings
   4.12 Architect-Engineer Design Quality Control Plan(QCP)
   4.13 Miscellaneous

CHAPTER XI

DESIGN SUBMISSION REQUIREMENTS

1. **INTRODUCTION**. The following information provides general guidance to the A-E designer for submission of the various design documents for Army and Air Force projects, including medical projects. The various design document requirements are specified below.

1.1 **Applicable Submission Phases** for each project will be identified in the particular A-E Scope of Work (SOW) as a basic contract requirement or option to the contract. The project SOW or specific instructions from the supervision district will give the submission distribution schedule, reproduction medium(s) and number of copies for the required submissions.

2. **ARMY/AIR FORCE PROJECTS GENERAL SUBMISSION PHASES**. The following phases of design are typical for the various types of Army and Air Force projects. Projects may incorporate all or some of the phases based on the User's specific requirements stated in A-E SOW. The cost engineering requirements for each submittal are in Chapter X, Cost Engineering Guide for Military Construction.

2.1 **Requirements and Management Plan (RAMP) (3%) (Air Force)**. The RAMP provides the facility needs to the design agent (US Army Corps of Engineers). The design agent may utilize an A-E contract to assist in RAMP development. A RAMP consists of two documents: a Requirements Document (RD); and a Project Management Plan (PMP). The major components of a RD are comprehensive project description, an area development plan (site development, relationship to the base comprehensive plan and architectural compatibility), and environmental concerns that impact the project. The host Base Civil Engineer (BCE) normally prepares and coordinates the RD with MAJCOM and furnishes it to the Air Force Design manager (DM). An A-E contract may be utilized for the preparation of the RD. The DM develops the PMP together with the design agent or A-E and MAJCOM. The major components of a PMP are an acquisition strategy and baseline project schedule. The requirements for the RAMP are stated in Air Force Engineering Technical Letter 95-2. The RAMP plus Air Force Parametric Cost Engineering (PACES) cost

estimate provides information to finalize the 1391 before its submission for budget approval.

2.2 **Schematic Design Submittal (5%) (Army)**. The submittal consists of single-line type drawings showing the design team's interpretation of the User's stated needs. This is accomplished through presentation of different layout schemes to the User to review and select the one that best meets their functional needs. The submittal shall consist of the following unless otherwise specified:

2.2.1 Small scale site plan indicating siting of building, parking, existing utility locations and ingress/egress to site and/or building.

2.2.2 Sketch elevations to show scale and mass of the facility including story heights.

2.2.3 Materials of construction.

2.3 **Pre-Concept Control Data Submittal (10%) (Army)**. This submittal is a short narrative on A4 metric, 210 mm X 297 mm reproducible bond, which develops a firm basis on which the design can proceed. The narrative discusses the designer's approach to the project for each plan and any site or utility problems that could affect the design and/or construction cost of the project. Possible solutions to these problems are presented and cost reduction measures discussed, if necessary. The narrative should include brief comparisons of cost impacts of the various alternatives. The submittal shall consist of the following unless otherwise specified:

2.3.1 One to three single-line floor plans.

2.3.2 Site plan indicating siting of building, parking, existing utility locations and ingress/egress to site and/or building.

2.3.3 Sketch elevations of building.

2.3.4 Narrative addressing proposed construction materials and methods, structural and HVAC system alternatives, and any unusual construction requirements.

2.3.5 A cost estimate shall be prepared and submitted as specified in Chapter X, Cost Engineering Guide for Military Construction.

2.4 **Charette Requirements.** A Charette is a process involving major commands, designers, users, and installation management decision makers to gather information on project requirements and reach consensus to enable the design to proceed to completion with a clear understanding by all parties as to project scope, conceptual design, and budget for the facility. The process is performed in a short period of time and includes meetings to maximize the user's access to the designer and construction management team, and the designer's access to the site and the installation management staff during the early steps in design development. The purpose of the charette and the products that are required from this process must be clearly defined to participants. Participants must be furnished the project functional requirements, and have technical and policy knowledge needed and the authority to make firm decisions and commitments.

2.4.1 The products required of the design Charette should be established through consultation between the project user and design agent managers early in the process and then given to all participants. The product developed during a charette typically is a written and graphic depiction of the project concept design, and a construction cost estimate that becomes the basis for completing the design. The document produced typically is equivalent to the Project Definition Brochure (Air Force) or Project Engineering Brochure (Army) as described in more detail below.

2.5 **Project Definition (10%-30%) (Air Force)**. The Project Definition is prepared based on the RAMP plus PACES cost estimate and provides sufficient documentation for Congressional Submittal. The Project Definition submittal requirements are identified in CTL 90-1 "Management of the MILCON Planning and Execution Process."

2.5.1 Purpose. The purpose of the Project Definition phase is the development of a clear and final definition, with customer involvement, of the project’s requirements. This phase should provide sufficient information to identify and meet functional requirements, determine the engineering sufficiency of the design for each technical discipline and provide the earliest possible check as to whether

construction costs will be within the program budget. The level of design required (10%-30%) is dependent on requirements of the user.

2.5.2 Brochure. The Project Definition phase typically includes a narrative and graphic brochure-type presentation of the functional and technical design for the project. The narrative should discuss the civil, site engineering, utilities availability and requirements for project connection; architectural style and compatibility with installation design guidance, functional relationships and their space requirements; mechanical, electrical, structural systems, and physical security needs. The report should give the basis of design including results of preliminary building foundation site investigation, design assumptions, preliminary calculations, life cycle cost considerations, and life safety and energy considerations. Also summarize environmental issues including remediation, lead based paint, asbestos in materials, regulated air emissions, HTRW wastes, industrial wastewater, etc. and identify required permits and any waivers needed. The document will include an index of Corps of Engineers Military Guide Specifications applicable to the project.

2.5.3 Format. The format for the Air Force project definition brochure is as presented in AEIM Chapter IX, Design Analysis.

2.5.4 Sketches/drawings required for the Air Force project definition brochures shall be identified as attachments and include the following as a minimum:

2.5.4.1 Civil (Attachment A-1, A-2, etc.) Site plan showing proposed buildings, parking, required demolition, grading when substantial cut/fill is needed, etc., utility plan for electrical, gas, stem, water, etc.

2.5.4.2 Architectural(Attachment B-1, B-2, etc.) Functional layout, floor plan, architectural compatibility, building elevations, typical wall sections.

2.5.4.3 Structural (Attachments C-1, C-2, etc.) Foundation type and sizing, floor and roof sections, any special framing requirements, exterior wall type and sizing.

2.5.4.4 Mechanical (Attachments D-1, D-2, etc.) Single line ductwork layout and sizing, equipment room layout and preliminary schedules for major equipment, fire protection.

2.5.5 A cost estimate shall be prepared as specified in Chapter X, Cost Engineering Guide for Military Construction.

2.6 **Project Engineering Phase/Code 3 (10%-15%) (Army).** The design process will have a Project Engineering Phase.

2.6.1 Purpose. The purpose of the Project Engineering phase is the development of a clear and final definition, with customer involvement, of the project's requirements. This phase should provide sufficient information to identify and meet functional requirements, determine the engineering sufficiency of the design for each technical discipline and provide the earliest possible check as to whether construction costs will be within the program budget.

2.6.2 Brochure. The Project Engineering phase typically includes a narrative and graphic brochure-type presentation of the functional and technical design for the project. The narrative should discuss the civil, site engineering, utilities availability and requirements for project connection; architectural style and compatibility with installation design guidance, functional relationships and their space requirements; mechanical, electrical, structural systems, and physical security needs. The report should give the basis of design including results of preliminary building foundation site investigation, design assumptions, preliminary calculations, life cycle cost considerations, and life safety and energy considerations. Also summarize environmental issues including remediation, lead based paint, asbestos in materials, regulated air emissions, HTRW wastes, industrial wastewater, etc. and identify required permits and any waivers needed. The document will include an index of Corps of Engineers Military Guide Specifications applicable to the project.

2.6.3 Format. The format for the Army Project Engineering brochure is as presented in AEIM Chapter IX, Design Analysis.

2.6.4 Sketches/drawings required for the Army project engineering brochures shall be identified as attachments and include the following as a minimum:

2.6.4.1 Civil (Attachment A-1, A-2, etc.) Site plan showing proposed buildings, parking, required demolition, grading when substantial cut/fill is needed, etc., utility plan for electrical, gas, stem, water, etc.

2.6.4.2 Architectural (Attachment B-1, B-2, etc.) Functional layout, floor plan, architectural compatibility, building elevations, typical wall sections.

2.6.4.3 Structural (Attachments C-1, C-2, etc.) Preliminary foundation, floor and roof sections, and any special framing requirements.

2.6.4.4 Mechanical (Attachments D-1, D-2, etc.) Single line ductwork layout and sizing, equipment room layout and preliminary schedules for major equipment, fire protection.

2.6.5 A Cost estimate shall be prepared as specified in Chapter X, Cost Engineering Guide for Military Construction.

2.7 **Concept Design (35%) (Army)**. (Concept Design will not normally be used.) This submittal typically consists of a narrative and graphic brochure-type presentation with enough information for the reviewer to understand the functional and technical approach the designer will follow to complete the project. As a minimum, the narrative discusses the civil, site engineering and architectural style and compatibility with installation guidance; functional relationships; construction materials and finishes; structural and foundation system; communications systems; power and electrical systems; plumbing and HVAC systems; physical security needs; and environmental design issues. Items or details that cannot adequately be described in narrative form are graphically shown on foldout drawings, sketches, tabulations, and/or photographs bound in the brochure. An estimate of construction costs, time and phasing is also included in the brochure. In addition, an index of the anticipated guide specifications to be utilized for the design is included. If required, Energy Analysis Studies, described in Chapter V of the AEIM, are submitted with the Concept Data brochure but bound separately. A cost estimate developed and submitted as specified in Chapter X, Cost Engineering Guide for Military Construction is required.

2.7.1 The purposes of the "Concept Design" for a military project are as follows:

2.7.1.1 To provide sufficient design information for the Using Agency to determine the acceptability of the proposed design as meeting their functional requirements for

operational use and economical maintenance during the anticipated life of the facility.

2.7.1.2 To provide sufficient data for a determination of the engineering sufficiency and soundness of the basic approach to the design for each technical discipline. Also, it will serve as a documentary check that the designer has been provided or has developed the essential engineering criteria necessary for all facets of final computations and detailed development of a thoroughly engineered and coordinated, economical and functional design.

2.7.1.3 To provide a check as to whether construction costs will be within the Army allowable percentage of the programmed dollars.

2.7.1.4 To limit design submissions to only those data essential to provide the above information, so that a minimum of time and monies will have been expended to reach a point of decision for such problems as the following:

2.7.1.4.1 Funds inadequate for initial project scope, thus requiring;

2.7.1.4.1.1 a reduction of scope by size; and/or

2.7.1.4.1.2 additive bid items; and/or

2.7.1.4.1.3 reprogramming by Using Service to increase funds.

2.7.1.4.2 Incomplete understanding between either the designer, the Corps of Engineers, or the Using Service as to Using Service needs, and the monies required to provide for those needs.

2.7.1.5 To provide the designer, after review of the brochure, with an approved set of technical conditions with which he may proceed with confidence to develop the complete facility.

2.7.2 Cost Savings Review: The design team shall review their design for cost saving opportunities and cost effectiveness. This review will be to identify high-cost, low-value items required by criteria and/or User needs, where the cost to make a change is minimal compared to potential savings; changes that could reduce the anticipated construction time; and areas that appear suitable for formal

Value Engineering Studies. The team shall identify the ideas and areas where a formal VE Study is considered desirable to develop alternatives for achieving cost reduction in structures, equipment, materials or methods of construction and these ideas shall be documented in the Concept Data Brochure as an attachment.

2.7.3 The format for the Concept Data brochure is presented in AEIM, Chapter IX "Design Analysis".

2.7.4 Drawings required for the Concept Data Brochure are identified as attachments and include the following as a minimum:

2.7.4.1 Civil (Attachment A-1, A-2, etc.):

2.7.4.1.1 Project location map.

2.7.4.1.2 Site demolition plan (if required).

2.7.4.1.3 Site Plan.

2.7.4.1.4 Grading plan.

2.7.4.1.5 Utility plan.

2.7.4.2 Architectural (Attachment B-1, B-2, etc.):
2.7.4.2.1 Floor plan.

2.7.4.2.2 Building elevations.

2.7.4.2.3 Building sections.

2.7.4.2.4 Typical wall sections.

2.7.4.2.5 Roof plan.

2.7.4.2.6 Room finish schedule.

2.7.4.2.7 Fire Protection Plan.

2.7.4.3 Structural (Attachment C-1, C-2, etc.):

2.7.4.3.1 Preliminary foundation plan.

2.7.4.3.2 Framing plan(s).

2.7.4.3.3 Preliminary Foundation & Roof Sections/Details

2.7.4.4 Mechanical (Attachment D-1, D-2, etc.):

2.7.4.4.1 Plumbing fixture/drain location plan.

2.7.4.4.2 HVAC equipment location/duct work layout plan/schedules.

2.7.4.4.3 Fire protection systems plan.

2.7.4.5 Electrical (Attachment E-1, E-2, etc.):

2.7.4.5.1 Site plan.

2.7.4.5.2 Lighting plan.

2.7.4.5.3 Power plan.

2.7.4.5.4 Communications plan.

2.8 **Preliminary Design (60%)**. This submittal typically consists of a design analysis, working drawings, marked-up guide specifications, construction cost estimate, and color boards. This submittal shall incorporate the accepted comments made on earlier design efforts including the charette documentation, Project Engineering, Concept Design or Project Definition. The medium(s) and number of copies submitted for the Preliminary Design shall be as required by the A-E Design Contract or specific instructions from the supervising district.

2.8.1 Working Drawings. Drawings shall be prepared using CADD following the standards in Chapter VIII. Drawings required for the Preliminary Design shall include as a minimum:

2.8.1.1 General:

2.8.1.1.1 Cover sheet and index of drawings.

2.8.1.1.2 Location and vicinity map including haul routes.

2.8.1.2 Civil:

2.8.1.2.1 Site demolition plan (if required).

2.8.1.2.2 Site plan/details.

2.8.1.2.3 Grading plan.

2.8.1.2.4 Utility plan/profiles/details.

2.8.1.2.5 Pavement plan and details.

2.8.1.2.6 Soils boring logs.

2.8.1.3 Architectural:

2.8.1.3.1 Demolition plan (if required)

2.8.1.3.2 Floor plan(s).

2.8.1.3.3 Building elevations.

2.8.1.3.4 Interior and exterior wall sections.

2.8.1.3.5 Reflected ceiling plan.

2.8.1.3.6 Room finish and color schedules

2.8.1.3.7 Door and window schedules.

2.8.1.3.8 Black and white perspective drawing.

2.8.1.3.9 Furniture plan.

2.8.1.3.10 Life Safety plan.

2.8.1.4 Structural:

2.8.1.4.1 Foundation plan(s) and partial details.

2.8.1.4.2 Footing, grade beam, or rib schedule(s).

2.8.1.4.3 Roof framing plan(s) and partial details.

2.8.1.4.4 Intermediate framing plan(s).

2.8.1.4.5 Sections and partial details illustrating typical major foundation and superstructure main force resisting framing structural members and connections.

2.8.1.4.6 All plans, sections, and details of special structural foundation and framing elements unique to the project.

2.8.1.5 Mechanical:

2.8.1.5.1 Equipment schedules/locations.

2.8.1.5.2 Plumbing plan, risers, and details.

2.8.1.5.3 Mechanical room plan with equipment clearances.

2.8.1.5.4 Fire protection plan.

2.8.1.5.5 HVAC plan and major details.

2.8.1.5.6 Sequence of control and control schematics.

2.8.1.6 Electrical:

2.8.1.6.1 Site plan.

2.8.1.6.2 Lighting plan and fixture schedules.

2.8.1.6.3 Power plan and equipment layout.

2.8.1.6.4 Outline riser diagrams for power, communications, fire alarm, etc.

2.8.1.6.5 Communication plan.

2.8.1.6.6 Special plans as required. Examples: intrusion detection, cathodic protection, lightning protection, TEMPEST, television, etc.

2.8.2 Design Analysis. The design analysis shall address the items specified in Chapter IX, "Design Analysis" of the AEIM. The following calculations are furnished at the 60% design stage:

2.8.2.1 Civil:

2.8.2.1.1 Pavement type and thickness of structure (100% complete).

2.8.2.1.2 Sizing of utilities (100% complete).

2.8.2.1.3 Sizing of storm drainage systems (100% complete).

2.8.2.2 Structural:

2.8.2.2.1 Superstructure design loads, both vertical and lateral, and analysis for main force resisting framing system (100% complete).

2.8.2.2.2 Foundation design loads and design analysis for main structural foundation members (100% complete).

2.8.2.3 Mechanical:

2.8.2.3.1 HVAC load calculations (100% complete).

2.8.2.3.2 Fire protection calculations to include AFFF if appropriate (100% complete).

2.8.2.3.3 Compressed air calculations (100% complete).

2.8.2.3.4 Plumbing calculations (100% complete).

2.8.2.4 Electrical:

2.8.2.4.1 Load calculations (100% complete).

2.8.2.4.2 Lighting calculations (100% complete).

2.8.2.4.3 Miscellaneous calculations as required. Examples; cathodic protection, lightning protection, TEMPEST, intrusion detection, etc.

2.8.3 Working Specifications. Requirements for the 60% design specifications are covered in AEIM Chapter VII, Specifications.

2.8.4 Cost Estimate. Requirements for the 60% design cost estimate are covered in AEIM Chapter X, Cost Engineering Guide for Military Construction.

2.9 **Final Design**. The project plans and specifications are complete and ready for advertising at this stage, except for incorporation of final comments, if any. The final design documents shall consist of complete construction working drawings, edited guide specifications with bid schedule, design analysis, color boards and a cost estimate. These documents shall have incorporated all accepted comments resulting from the previous design submissions. The documents submitted shall have been given an Independent Technical Review by the A-E for completeness, compliance with Corps of Engineers design criteria, use of appropriate

analyses methods and assumptions and constructability prior to submission. The submission medium(s) and number of copies submitted for the Final Design shall be as required by the A-E Design Contract or specific instructions from the supervising district.

2.9.1 Drawings. Drawings shall be prepared using Computer-Aided Design and Drafting software following the drafting standards in Chapter VIII, Drawings. Drawings required for the Final Design submission shall include as a minimum:

2.9.1.1 General:

2.9.1.1.1 Cover sheet and index of drawings.

2.9.1.1.2 Location and vicinity map including haul routes.

2.9.1.2 Civil:

2.9.1.2.1 Site demolition plan (if required).

2.9.1.2.2 Site plan/details.

2.9.1.2.3 Grading plan.

2.9.1.2.4 Utility plan/profiles/details.

2.9.1.2.5 Pavement plan and details.

2.9.1.2.6 Soils boring locations and logs.

2.9.1.3 Architectural:

2.9.1.3.1 Demolition plan(s) (if required)

2.9.1.3.2 Floor plan(s).

2.9.1.3.3 Building elevations.

2.9.1.3.4 Interior and exterior wall sections.
2.9.1.3.5 Reflected ceiling plan.

2.9.1.3.6 Room finish and color schedules

2.9.1.3.7 Door and window schedules.

2.9.1.3.8 Perspective drawing.

2.9.1.3.9 Furniture plan.

2.9.1.3.10 Life Safety plan.

2.9.1.4 Structural:

2.9.1.4.1 Foundation plan(s) and details. Column grid lines, beam locations size and reinforcement, concrete slab thickness and reinforcement, construction, contraction and expansion joints. Precast plank or T sizes and details of connections and concrete overlay if needed. Clearly show any requirements for capillary water and vapor barrier or carton forms for voids below foundation slabs and beams.

2.9.1.4.2 Footing or drilled pier, grade beam, or rib mat integral rib and footing schedule(s) for size and reinforcement.

2.9.1.4.3 Roof framing plan(s) and details. Beam, joist, truss locations and sizes, roof deck type and details.

2.9.1.4.4 Intermediate floor framing plan(s) and details. Beam, joist girder and/or joist locations and sizes, slab type, thickness and reinforcement. Precast plank sizes and details of their connections and concrete overlay if needed.

2.9.1.4.5 Sections and details for superstructure framing structural members including structural steel connections, base plates and anchor bolts. Column, beam, and connection schedules.

2.9.1.4.6 Wall sections and details. CMU wall thickness, reinforcement size and spacing, control joint details, stiffener and lintel schedules. Exterior wall steel stud size, spacing, properties, and connections between members and to main structural members. Precast wall thickness, minimum reinforcement and connections to building main framing and/or between precast members.

2.9.1.4.7 All plans, sections, and details of special structural foundation and framing elements unique to the project.

2.9.1.5 Mechanical:

2.9.1.5.1 Equipment schedules/locations.

2.9.1.5.2 Plumbing plan, risers, and details.

2.9.1.5.3 Mechanical room plan with equipment clearances.

2.9.1.5.4 Fire protection plan.

2.9.1.5.5 HVAC plan and details.

2.9.1.5.6 Sequence of control and control schematics.

2.9.1.6 Electrical:

2.9.1.6.1 Site plan.

2.9.1.6.2 Lighting plan and fixture schedules.

2.9.1.6.3 Power plan and equipment layout.

2.9.1.6.4 Outline riser diagrams for power, communications, fire alarm, etc.

2.9.1.6.5 Communication plan.

2.9.1.6.6 Special plans as required. Examples: intrusion detection, cathodic protection, lightning protection, TEMPEST, television, etc.

2.9.2 Design Analysis. The design analysis address the items specified for a Final Design in Chapter IX, "Design Analysis" of the AEIM. All design calculations should be checked by a different individual than the one who performed the analysis. The following calculations are furnished at this stage:

2.9.2.1 Civil:

2.9.2.1.1 Pavement type and thickness of structure.

2.9.2.1.2 Sizing of utilities.

2.9.2.1.3 Sizing of storm drainage systems.

2.9.2.2 Structural:

2.9.2.2.1 Superstructure design load and analysis for main frame system. Design of beams, columns, lateral bracing, shear walls, horizontal diaphragms, and structural steel connections. Vertical dead and live loads and lateral loads caused by seismic and wind loads shall be included in the

superstructure design. Security engineering blast design provisions shall be provided for when applicable.

2.9.2.2.2 Foundation design loads and design analysis including sizing to satisfy allowable foundation bearing pressures and sizing and reinforcement of all structural foundation members.

2.9.2.2.3 Roof deck, floor slabs, exterior wall system, and all secondary framing completely designed. Security engineering blast design provisions shall be provided for when applicable.

2.9.2.3 Mechanical:

2.9.2.3.1 HVAC load calculations.

2.9.2.3.2 Fire protection calculations to include AFFF if appropriate.

2.9.2.3.3 Compressed air calculations.

2.9.2.3.4 Plumbing calculations.

2.9.2.4 Electrical:

2.9.2.4.1 Load calculations.

2.9.2.4.2 Lighting calculations.

2.9.2.4.3 Miscellaneous calculations as required. Examples; cathodic protection, lightning protection, TEMPEST, intrusion detection, etc.

2.9.3 Specifications. Requirements for the Final Design specifications are covered in AEIM Chapter VII, Specifications.

2.9.4 Cost Estimate. Requirements for the Final Design cost estimate are covered in AEIM Chapter X, Cost Engineering Guide for Military Construction.

2.10 **Corrected Final Design**. The design documents shall have been corrected based on the comments resulting from the Final Design submission and Bidability, Constructability, Operability (BCO) review by the supervising district. The A-E will perform a compliance check to assure all accepted

comments have been incorporated prior to submission of the Corrected Final Design. The Corrected Final Design submission shall consist of Contract Drawings, Project Specifications including Divisions 2 through 16 for technical requirements preceded by a Bid Schedule and Government provided Division 0 "Bidding Requirements and Contract Forms; Division" 1 "General Requirements"; final design analysis; submittal register ENG Form 4288 "Submittal Register"; DD Form 1354 "Transfer and Acceptance of Military Real Property" and a final MCACES Gold cost estimate. The construction drawings and specifications shall be suitable for reproduction as bidding documents for construction contracting. Amendments shall be made to the Contract Drawings and Specifications after advertising and before bid opening as needed to clarify construction requirements. A Bid Opening cost estimate incorporating all amendments shall be provided as specified in Chapter X. The submission medium(s) and number of copies submitted for the Corrected Final Design, Amendments, and final Contract Plans and Specifications with amendments shall be as required by the A-E Design Contract or specific supervising district instructions.

3. **MEDICAL PROJECTS GENERAL SUBMISSION REQUIREMENTS - ARMY/AIR FORCE**. Submittal requirements for medical projects are more complex and detailed than other military projects. Although the submittal requirements are generally the same for both Army and Air Force projects, the Army submittal requirements will be provided by the supervising district, while Air Force submittal requirements are stated in Military Handbook MIL-HDBK 1191.

4. **GENERAL DESIGN DOCUMENT REQUIREMENTS**.

4.1 **Drawings**. All drawings shall be prepared to conform with applicable provisions of the AEIM, Chapter VIII "Drafting." All final construction drawings shall be master CADD files and Vellum drawings plotted from CAL files, with number of copies as required in project Scope of Work. All drawings submitted shall be marked "Project Engineering," "Advanced-Final" or as applicable. Unless otherwise directed by the supervising district, all full-scale drawings shall be prepared on standard A1 metric size (594 mm X 841 mm). The scales used shall properly present the design data development; including detailed features when reduced to a half size sheet approximately 297 mm X 420 mm

size. Drawings for inclusion in brochures shall be on A4 metric (210 mm X 297 mm) or A3 metric (297 X 420).

4.2 **Specifications**.

4.2.1 The specifications shall be prepared in accordance with the AEIM, Chapter VII "Specifications" and include a bidding schedule with appropriate quantities and an index of the technical sections of the specifications. Use of SPECINTACT is mandatory.

4.2.2 The Final and Corrected Final Design specifications shall include the Government furnished construction contract General Conditions and Special Clauses, which will be provided to the AE.

4.2.3 To facilitate preparation of the Special Clauses by others, the following information shall be furnished by the AE with the design stage prior to the Final Design. Depending on the AE Scope of Work this may be the Charette, Project Definition/Project Engineering, Preliminary Design, or within 30 days after completion of the Pre-Design Conference if none to those submittals are required by the AE design contract.

4.2.3.1 Complete phasing (or sequence of work) requirements and any requirements to be included on utility outages (See AEIM, Chapter IX, Appendix C, "Project Phasing Data.")

4.2.3.2 A list of Government-furnished equipment which is to be installed by the construction Contractor. The list must include complete description and quantity of each item, place and time where equipment is or will be available to the construction Contractor, and whether or not the material is to be requisitioned by the District Office.

4.3 **Design Analysis**. A design analysis is required for all projects. The Design Analysis submitted shall include information, narratives, data, and computations necessary to support and describe the design developed, with sufficient detail to permit a complete understanding of the project design. It shall be prepared in accordance with the AEIM, Chapter IX "Design Analysis". The Design Analysis shall be produced on compatible computer files as specified in A-E Scope of Work. The calculations, typed and hand written shall be clear and legible and scanned into a computer file for submission with the Corrected Final Design Analysis.

All pages will be sequentially numbered. The A-E Contract will give the medium submission requirements.

4.4 **Cost Estimate**. The AE design team shall maintain the confidential nature of all project estimates prepared under the design contract with the Corps of Engineers. For all Army projects, an Engineering Form 3086 shall be prepared for all submittals through the 35% design. For all Air Force projects, an AF Form 1178 shall be prepared for all submittals except the Bid Opening. All estimates shall be prepared in accordance with the AEIM, Chapter X, Cost Engineering Guide for Military Construction.

4.5 **Color Boards**. Color boards depicting all architectural finishes shall be prepared in accordance with the AEIM, Chapter III "Architectural" and Chapter IX "Design Analysis." The intent is to provide a coded presentation document reflecting design and/or selection and color coordination of Construction Contractor furnished, structural related items. The Architect-Engineer may exercise the option of providing color boards organizing colors by color scheme, by space or room, or by combining these to adequately communicate his design intent. The color samples shall be coded and coordinated with the finish/color/graphics schedules of the contract documents. Actual color samples shall be displayed. Samples shall be large enough to indicate true patterns, color, and texture. However, care should be taken to present color and texture in direct proportion to that which will actually be installed in a given space. Project title should occur within the lower right-hand corner.

4.6 **Structural Interior Design (SID)**. Structural interior design services are a standard design requirement and will be accomplished as a part of the basic facility design in accordance with the AEIM, Chapter III "Architectural" and Chapter IX "Design Analysis." In addition to those requirements, a statement of design objectives shall delineate the designer's philosophy and intent relative to an interior design scheme <u>before</u> it is integrated into the construction documents and translated into physical form. A statement of interior design objectives is required to form a basis for developing design schemes that reflect the functional and behavioral needs of the ultimate user. The furniture footprint plan, while not considered a final layout, will demonstrate the designer's ability to comprehend and plan for the various functions that are to be

housed in the facility and, at the same time, provide the user a good indication of the adequacy of each space from a size and shape standpoint. The designer should use standard furniture sizes at this point since the final solution may utilize various combinations of new and used furniture.

4.7 **Comprehensive Interior Design (CID)**. Comprehensive Interior Design (CID) requirements include design, selection, and development of interior building materials, finishes and furnishings to ensure integrating the total architectural and interior concept to the functional requirements of the User. CID requirements, therefore, include Structural Interior Design (SID). The CID shall be prepared in accordance with the AEIM, Chapter III "Architectural" and/or criteria stated in AE SOW. In addition to those requirements, a statement of design objectives is necessary to delineate the designer's philosophy and intent relative to an interior design scheme before it is integrated into the construction documents and translated into physical form. A statement of interior design objectives is required to form a basis for developing design schemes that reflect the functional and behavioral needs of the ultimate user. Where applicable, include desired physiological and functional impact of the interior environment on its inhabitants and proposed method of accomplishing same by using space planning, shapes, forms, color, patterns, textures, fabrics and furnishings.

4.8 **ENG Form 4288 "Submittal Register."** This document identifies the shop drawings, continuation of design analysis, equipment specifications, and samples that the Construction Contractor will have to submit to the Government to assure that those items comply with the contract specifications. Items shall be classified for Government Approval (GA) or For Information Only (FIO). Use SpecsIntact software to prepare the Submittal Register.

4.9 **DD Form 1354 "Transfer and Acceptance of Military Real Property."** This document is a detailed listing of all real property by category description for the designed facility. It shall be accomplished at the completion of design and furnished with the Corrected Final Design. The category breakdown used in preparation of the DD 1354 shall be compatible with that in use at the particular base where the facility is located. The AE shall coordinate with the district Technical Leader and base personnel to establish the category breakdown requirements.

4.10 **Construction Schedule**. An estimate shall be prepared of the construction time in calendar days to complete the project. The estimate will be based upon a standard 40-hour workweek utilizing normal size crews of workers. The evaluation of construction time will consider restrictions such as working hours, security, access, noise level, joint occupancy requirements, etc. The potential impact on the schedule of adverse weather will not be considered by the A-E, but will be incorporated into the schedule by the Government. The A-E will incorporate phasing or sequencing requirements based upon User needs and/or design considerations. The estimated construction time developed shall be supported by a logic diagram showing the interdependencies of the major features of the project and the duration of each activity. The diagram shall be prepared in accordance with EP 415-1-5, Network Analysis Systems Guide, Chapter 3, Arrow Diagramming System. The diagram can be summary in nature, with the number of activities included to be determined by the size and complexity of the project. A narrative description should also be provided which describes the estimating process and considerations used in developing the construction time. The construction schedule data shall be furnished with Preliminary, Final Design, and Corrected Final Design phases and referenced in the Design Analysis as a supplement to Appendix C, Construction Phasing Data.

4.11 **Architectural Sketches/Renderings**.

4.11.1 Black and White Perspective(s). The drawing(s) is/are normally prepared and submitted with the Preliminary design. The intent is to prepare a single-line pencil, ink or computer generated perspective(s) from an eye-level or birds-eye view that best illustrates the most attractive features of the building.

4.11.2 Color Renderings. The requirements for the rendering are stated in the A-E SOW. The rendering is a color reproduction of the approved black and white perspective drawing prepared at the Preliminary design phase or as otherwise directed in writing.

4.12 **Architect-Engineer Design Quality Control Plan (QCP).** The A-E is required to submit a product QCP with the fee proposal. The minimum requirements for the QCP are given in ER 1110-1-12 and project SOW. The QCP is the A-E's management plans for execution of the contract. The QCP

describes the way in which the A-E will produce the deliverables, the steps that will be taken to control quality, and an assigned point-of-contact within the A-E's organization responsible for assuring compliance with the QCP. The Contracting Officer's Representative will notify the A-E, in writing, of the acceptance of the QCP. The QCP, modified to include any changes to the contract that occur, will be attached as an appendix to the design analysis.

4.13 **Miscellaneous**.

4.13.1 Site Adapt Designs. Previous designs supplied for site-adaptation for a project must be reviewed and updated to reflect site conditions and current regulatory requirements, standards and criteria.

4.13.2 Standard Designs. Changes to Standard Designs shall be avoided. Any changes require approval by CESWD and HQUSACE.

4.13.3 Energy Conservation. Design at all stages shall incorporate, where applicable, the criteria set forth in the AEIM, Chapter V for Energy Conservation.

4.13.4 Designing for the Handicapped. Structures likely to be used by the physically handicapped will be identified and shall be designed to facilitate access by the physically handicapped in accordance with the provisions of the Uniform Federal Accessibility Standards. The checklist of Items Governing Design for the Physically Handicapped, Chapter IX, Appendix D of the AEIM, shall be completed and submitted with the Final Design Analysis.

CHAPTER XII

ENVIRONMENTAL DESIGN

Table of Contents

TITLE

1. PURPOSE
   1.1 Reference

2. CULTURAL AND NATURAL RESOURCES
   2.1 General Reference
   2.2 National Environmental Policy Act (NEPA)
   2.3 Protection of Historic Properties
   2.4 Protection of Cultural Resources
   2.5 Protection of Endangered Species
   2.6 Wetlands and Floodplains

3. WATER QUALITY AND PREVENTION OF WATER POLLUTION
   3.1 General Reference
   3.2 Water Supply
      3.2.1 Reference
      3.2.2 Design Guidance
   3.3 Municipal Wastewater
      3.3.1 Reference
      3.3.2 Design Guidance
   3.4 Industrial Wastewater
      3.4.1 Reference
      3.4.2 Design Guidance
   3.5 Storm Water
      3.5.1 Reference
      3.5.2 Design Guidance

4. AIR QUALITY AND PREVENTION OF AIR POLLUTION
   4.1 Reference
   4.2 Design Guidance

5. SOLID WASTE (NON-HAZARDOUS)
   5.1 Reference
   5.2 Design Guidance

6. HAZARDOUS, TOXIC, AND RADIOACTIVE WASTES (HTRW)
   6.1 General Reference
   6.2 Asbestos Containing Material (ACM)
      6.2.1 Survey
      6.2.2 Plans & Specifications

Table of Contents (cont.)

6.3 Lead Based Paint (LBP)
6.3.1 Survey
6.3.2 Plans & Specifications
6.4 Polychlorinated Biphenyls (PCBs)
6.5 HTRW other than ACM, LBP, and PCBs
6.6 Industrial Facilities
6.7 IRP Sites
6.8 Above-ground and Underground Storage Tanks
6.9 Waste Storage Facilities
6.10 Health and Safety

7. FEDERAL, STATE, AND LOCAL PERMITS

CHAPTER XII

ENVIRONMENTAL DESIGN

1. **PURPOSE**:

The Department of Defense is committed to environmental stewardship as an integral part of its mission. Federal facilities shall at all times be designed, constructed, operated, and maintained in compliance with all applicable Federal, State, and local environmental regulations, including permit requirements. Based on this principle, new designs shall be accomplished in a manner which complies with all applicable environmental laws, eliminates or at least reduces potential sources of pollution, and preserves natural and cultural resources for future generations. In addition to developing environmentally sound designs, necessary measures shall be included in the plans and specifications to eliminate or minimize degradation of the environment during construction.

This chapter provides guidance on the environmental issues to be addressed during the design phase of a project. It is not intended to be all-inclusive. The designer is responsible for identifying all environmental laws and regulations applicable to each project and for ensuring that the project design is accomplished in accordance with them. The following references provide general environmental design guidance applicable to all projects designed by and for the Corps of Engineers.

1.1 **Reference.**

1.1.1 Executive Order (E.O.) 11514, "Protection and Enhancement of Environmental Quality," March 5, 1970, as amended by E.O. 11991, May 24, 1977

1.1.2 E.O. 12088, "Federal Compliance with Pollution Control Standards", October 13, 1978 as amended by E.O. 13148 “Greening The Government Through Leadership In Environmental Management”, April 22, 2000.

1.1.3 DOD Directive 5100-50, "Protection and Enhancement of Environmental Quality," May 24, 1973

1.1.4 DOD Directive 4120-14, "Environmental Pollution Prevention, Control, and Abatement," August 30, 1977

1.1.5 EM 385-1-1, "COE Safety and Health Requirements Manual," September 3, 1996

1.1.6 COE Military Handbook - 1190 (Only for Military Projects), "Facility Planning and Design Guide," 01 September 1987, Chapter 2 Environmental Quality

1.1.7 AR 200-2 (Only for Military Projects), "Environmental Effects of Army Actions," December 23, 1988

1.1.8 EM 1110-2-38 (Only for Civil Works Projects), "Environmental Quality in Design of Civil Works Projects," 3 May 1971

1.1.9 ETL 1110-3-491, “Sustainable Design for Military Facilities,” January 31, 2000

1.1.10 E.O. 13101, "Greening the Government Through Waste Prevention, Recycling, and Federal Acquisition", September 14, 1998.

1.1.11 E.O. 13148 “Greening The Government Through Leadership In Environmental Management”, April 22, 2000

2. **CULTURAL AND NATURAL RESOURCES**:

2.1 **General Reference.**

2.1.1 Public Law (P.L.) 91-190, "The National Environmental Policy Act of 1969", as amended, 42 U.S.C. 4321, et seq.

2.1.2 Title 40, Code of Federal Regulations (CFR) 1501-1508, "Council on Environmental Quality Regulations on Implementing National Environmental Policy Act"

2.1.3 P.L. 93-205, "Endangered Species Act of 1973," as amended, 16 U.S.C. 1531, et seq.

2.1.4 P.L. 89-665, "National Historic Preservation Act of 1966," as amended by P.L. 95-515, December 12, 1980, 16 U.S.C. 470, et seq.

2.1.5 P.L. 96-95, "Archaeological Resources Protection Act of 1979", as amended, 16 U.S.C. 470 aa-11

2.1.6 P.L. 101-601, "Native American Graves Protection and Repatriation Act (NAGPRA) of 1990", 25 U.S.C. 3001 et seq.

2.1.7 P.L. 95-341, "American Indian Religious Freedom Act of 1978," as amended, 42 U.S.C. 1996 et seq.

2.1.8 AR 420-40, "Historic Preservation," 15 May 1984

2.1.9 TM 5-801-1, "Historic Preservation Administrative Procedures," November 1975

2.1.10 TM 5-801-2, "Historic Preservation Maintenance Procedures," February 1, 1977

2.1.11 Regulatory Program of the Corps of Engineers, 33 CFR Parts 320-330 (inclusive)

2.1.12 E.O. 11593, "Protection and Enhancement of the Cultural Environment"

2.1.13 ER 1130-2-540, "Environmental Stewardship and Maintenance Guidance and Procedures," November 15, 1996

2.1.14 E.O. 11990, "Protection of Wetlands", May 24, 1977

2.1.15 EP 1130-2-540, "Environmental Stewardship and Maintenance Guidance and Procedures," November 15, 1996

2.1.16 ER 200-2-2, "Procedures for Implementing NEPA," March 4, 1988.

2.2 **National Environmental Policy Act (NEPA).** In accordance with AR 200-2, the installation will prepare the NEPA documentation and provide it to the Project Manager, who is responsible for providing it to the design team. If the NEPA documentation is not received, the designer should request it at the pre-design conference. At a minimum, the documentation will consist of Section 15 of DD Form 1391 for military projects and Record of Environmental Consideration, if appropriate. In many cases, the documentation will consist of an Environmental Assessment (EA) with a Finding of No Significant Impact (FONSI) or an Environmental Impact Statement (EIS) with a Record of Decision (ROD). The design should address any issues raised in the environmental section of DD Form 1391. In addition, the design shall include any mitigation plans, monitoring requirements and/or protective measures identified in the EA or

EIS. In some cases, the project will be covered under a categorical exclusion from further NEPA considerations. However, the exclusion does not exempt the project from compliance with all related laws and regulations, such as the National Historic Preservation Act, etc...

2.3 **Protection of Historic Properties.** In Section 18 of the DD Form 1391, the installation will identify any historic properties impacted by the project, will conduct a survey if necessary and describe the coordination with State Historic Preservation Officer and Advisory Council. As a result of their investigation, the installation will indicate if special design criteria apply. If no information on historic properties is provided, the designer should request it at the pre-design conference.

2.4 **Protection of Cultural Resources.** The installation will determine if the project impacts any known archeological sites, Native American cultural sites, or other cultural resources and will indicate if any special design considerations are necessary due to the presence of these resources. NAGPRA requires that Native American cultural items be excavated from Federal land only pursuant to an agreement resulting from consultation with concerned Native American groups. The installation is responsible for the coordination. If the installation has identified Native American cultural resources at the project site, the designer should modify the specifications to comply with the agreement. If no information on cultural resources of any type is provided, the designer should request this information at the pre-design conference.

2.5 **Protection of Endangered Species.** The installation will determine if the project might affect any endangered or threatened species and if so, will coordinate with the U.S. Fish and Wildlife Service to determine appropriate protection measures. If endangered species are present, the contract drawings shall indicate the areas in which no construction activity may occur, and/or other requirements of the Fish and Wildlife Service Biological Opinion. Additional requirements may be provided by the installation. If no information about endangered species is provided, the designer should request this information at the pre-design conference.

2.6 **Wetlands and Floodplains.** In Section 16 of DD Form 1391, the installation will identify whether the project is within a floodplain or a wetland area. If no information is provided,

the designer should request this information at the pre-design conference. The project site shall be developed in accordance with all permit requirements of Section 404 of the Clean Water Act.

3. **WATER QUALITY AND PREVENTION OF WATER POLLUTION:**

Innovative treatment technologies and pollution prevention practices should be considered in the design.

3.1 **General Reference.**

3.1.1 P.L. 92-500, "Clean Water Act of 1972," as amended, including Public Law 100-4, "Water Quality Act of 1987", 33 U.S.C. 1341 et seq.

3.1.2 P.L. 93-523, "Safe Drinking Water Act," as amended, 42 U.S.C. 300f et seq.

3.1.3 TM 5-814-8, "Evaluation Criteria Guide for Water Pollution Prevention, Control, and Abatement Programs," April 23, 1987

3.2 **Water Supply.**

3.2.1 Reference.

3.2.1.1 TM 5-813-1/AFM 88-10, Vol. 1, "Water Supply Sources and General Considerations," 4 June 1987

3.2.1.2 TM 5-813-3/AFM 88-10, Vol. 3, "Water Supply, Water Treatment," 16 September 1985

3.2.1.3 TM 5-813-4/AFM 88-10, Vol. 4, "Water Supply, Water Storage," 20 September 1985

3.2.1.4 TM 5-813-5/AFM 88-10, Vol. 5, "Water Supply, Water Distribution," November 3, 1987

3.2.1.5 TM 5-813-6/AFM 88-10, Vol. 6, "Water Supply for Fire Protection," October 1965

3.2.1.6 TM 5-813-7/AFM 88-10, Vol. 7, "Water Supply for Special Projects" September 2, 1986

3.2.1.7 TM 5-813-8/AFM 88-10, Vol. 8, "Water Desalination," September 15, 1986

3.2.1.8 EM 1110-2-503, "Design of Small Water Systems," 25 January 1984

3.2.1.9 ETL 1110-2-297, "Evaluation of Existing Water Distribution Systems," 20 Jun 86

3.2.1.10 54 Federal Register (FR) 27488, June 29, 1989, "Surface Water Treatment Rule"

3.2.1.11 56 FR 26460, June 7, 1991, "Lead and Copper Rule"

3.2.1.12 American Water Works Association (AWWA) Standards

3.2.2 Design Guidance. In many cases, water supply design of the new facility is merely an additional connection to an existing water supply system. For these projects, the designer should verify that the pressure, quantity, and quality of the existing water supply are adequate to support all equipment within the new facility. If they are not adequate, the facility design should include the items necessary to provide the required pressure, quantity, and quality; i.e. booster pumps, water softeners, etc. Additional criteria for routine designs is presented in the Water Distribution section of Chapter II - Civil.

Projects located in remote areas usually require new distribution lines. Some projects will also require new supply and treatment facilities. Design of these facilities shall be in accordance with the references listed. Where new water wells are required, the water well specification will be provided by the Corps of Engineers, and the designer shall incorporate the information into the contract drawings. For treatment and storage facility designs, the designer shall coordinate with the using service to determine needs and operating capabilities. The design shall provide for a water supply which meets the primary drinking water standards of the Safe Drinking Water Act. At a minimum, the design shall provide the same level of treatment as the existing system, and it shall be fully compatible with the existing system. The use of innovative treatment technology is encouraged. Controls for the new facility shall be connected to the installation's Energy Monitoring and Control System (EMCS), unless directed otherwise by the installation.

3.3 **Municipal Wastewater.**

3.3.1 Reference.

3.3.1.1 TM 5-814-1/AFM 88-11, Vol. 1, "Sanitary and Industrial Wastewater Collection - Gravity Sewers and Appurtenances," March 4, 1985

3.3.1.2 TM 5-814-2/AFM 88-11, Vol. 2, "Sanitary and Industrial Wastewater Collection - Pumping Stations and Force Mains," March 15, 1985

3.3.1.3 TM 5-814-3/AFM 88-11, Vol. 3, "Domestic Wastewater Treatment," August 31, 1988

3.3.1.4 EM 1110-1-501, "Process Design Manual for Land Treatment of Municipal Wastewater," May 1982

3.3.1.5 EM 1110-2-501 Part 1, "Design of Wastewater Treatment Facilities Major Systems," September 29, 1978

3.3.1.6 EM 1110-2-501 Part 2, "Design of Small Systems Wastewater Treatment Facilities," September 30, 1980

3.3.1.7 EM 1110-2-501 Part 3, "Design of Wastewater Facilities Capdet Program User Guide W/Change 1," May 31, 1983

3.3.1.8 ETL 1110-2-522, "Wastewater Recycle/Reuse Systems for Recreation Areas," Jul 10, 1981

3.3.1.9 ETL 1110-2-527, "Wastewater Management Studies, Alternative Wastewater Disinfection Methods for Corps of Engineers Recreation Areas," Jun 25, 1982

3.3.1.10 ETL 1110-3-442, "Ultraviolet Disinfection at Army Wastewater Treatment Facilities," August 24, 1992

3.3.1.11 National Sanitation Foundation (NSF) Standards

3.3.2 Design Guidance. For many projects, wastewater design consists of a routine connection to an existing sanitary sewer system. In these cases, verify that the existing lines are capable of conveying the additional wastewater volume from the new facility. If the system is not adequate, the designer is responsible for notifying the Project Manager, who will coordinate with the installation to determine how the problem

will be addressed. Additional criteria for routine designs is discussed in the Sanitary Sewers section of Chapter II - Civil.

Projects located in remote areas often require additional sewer lines, lift stations, pneumatic ejectors, and/or on-site sewage facilities. Design of these facilities shall be in accordance with the references listed. Lift stations are a relatively common design feature, with the following design criteria often not met: 1) The lift station must have a minimum of two pumps, 2) Pumping capacity shall be adequate to discharge the peak flowrate with the largest pump out of service, 3) Each pump shall be capable of passing solids up to 3 inches in diameter, 4) Pumps shall be provided with lifting chains and guide rails, and 5) The maximum retention time in the wet well shall not exceed 30 minutes to prevent septicity. Pre-fabricated, package lift stations are acceptable for small stations pumping extreme peak flowrates of less than 700 gpm, as defined in TM 5-814-1. A performance-type specification is required for a package lift station. A package lift station may not be specified by providing a manufacturer's name and model number.

For treatment facility designs, designers must coordinate with the using service to determine needs and operating capabilities. Septic tanks with leach field or evapo-transpiration (ET) beds shall be used for small, remote facilities where connections to existing sewer lines are not feasible. Wastewater treatment plant additions shall be fully compatible with the existing treatment plant. Unless the life cycle cost of an innovative treatment method exceeds the life cycle cost of the most cost- effective alternative by more than 15 percent, all designs of new wastewater treatment plants and wastewater treatment plant additions shall utilize innovative treatment processes and techniques, such as recycle and reuse techniques, land treatment, etc... Best Available Technology (BAT) shall be used where required by the Clean Water Act.

3.4 **Industrial Wastewater.**

3.4.1 Reference.

3.4.1.1 TM 5-814-1, "Sanitary and Industrial Wastewater Collection - Gravity Sewers and Appurtenances," March 4, 1985

3.4.1.2 TM 5-814-2, "Sanitary and Industrial Wastewater Collection - Pumping Stations and Force Mains," March 15, 1985

3.4.1.3 ETL 1110-3-481,"Containment and Disposal of Aqueous Film-Forming Foam (AFFF) Solution", May 23, 1997

3.4.1.4 American Petroleum Institute (API) Pub. No. 421-90, "Monographs on Refinery Environmental Control - Management of Water Discharges, Design and Operation of Oil-Water Separators," First Edition

3.4.1.5 Appropriate treatment design guidance as listed under the Municipal Wastewater section of this chapter

3.4.1.6 ETL 1110-3-466, "Selection and Design of Oil/Water Separators at Army Facilities", August 26, 1994.

3.4.2 Design Guidance. Prior to discharge into a sanitary sewer, appropriate pretreatment (i.e. acid neutralization basins, oil/water separators) of industrial wastewater shall be included in the design. If the discharge ultimately reaches a Publicly Owned Treatment Works (POTW), the design shall comply with all pretreatment requirements of the POTW. Discharge of industrial wastewater, including wastewater that has been pretreated, to a storm drain system is not permitted. An exception may be made only if written authorization is provided by the installation's environmental office which is responsible for wastewater permitting.

Oil-water separators and grease traps are the most common pretreatment methods. Grease traps shall provide a minimum detention time of 30 minutes. The invert of the outlet pipe should be located at least one pipe diameter below the invert of the inlet pipe.

Oil-water separators shall be designed in accordance with API Publication Number 421-90, ETL 1110-3-466, and with the Oil-Water Separators section of Chapter II - Civil. Depending on the type of industrial activity, new storm water regulations (See Storm Water section of this chapter) may require outdoor oil-water separators to be sized to handle the storm water runoff. Many Air Force installations are requiring the designer to use a standard design for an oil-water separator based on HQ SAC/DEE letter of 1 Aug 91, subject: Oil/Water Separator Design Criteria. The design is based on a design flow of 100 gpm. If this standard design is requested by the installation, verify that it is appropriate for the intended use. Coordinate design alternatives with the using service, if the standard design is not adequate.

Aqueous Film Forming Foam (AFFF) acts as a toxicant to natural environments and biological treatment systems. If AFFF is to be included in a facility design, contact the installation to determine if the treatment plant receiving waste from the facility is capable of handling an AFFF surge. If not, the facility shall be designed within the restrictions of the receiving treatment plant. Also, evaluate the size of the sanitary sewer lines to verify that they can accommodate the volume of flow that would result. At no time may AFFF be discharged to the storm drainage system. If there is no feasible way to discharge the AFFF to the sanitary sewer system, provide a retention pond with an impermeable liner to impound the AFFF flow for collection and proper disposal.

Historically, floor drains and trenches have been provided in maintenance shops and other industrial facilities regardless of the need for them. Coordinate with the installation to determine if the facility requires floor drains to meet operational requirements. If not, the design should minimize the potential for unplanned and untreated industrial releases by limiting floor drains to rooms and areas which require them for facility operation. If floor drains are necessary, ensure that chemical storage and use areas within the room are separated from the drains by curbing or other structural method to prevent accidental releases. The drains should flow into the sewer system, storm water collection system, or other retention area. The environmental shop should be consulted with to ensure the proper collection requirements.

3.5 **Storm Water.**

3.5.1 Reference.

3.5.1.1 55 Federal Register (FR) 47990, November 16, 1990, "National Pollutant Discharge Elimination System Permit Application Regulations for Storm Water Discharges," 40 CFR Parts 122, 123, and 124

3.5.1.2 57 FR 41209, September 9, 1992, "Final NPDES General Permits for Storm Water Discharges from Construction Sites"

3.5.1.3 57 FR 41297, September 9, 1992, "Final NPDES General Permits for Storm Water Discharges Associated with Industrial Activity"

3.5.1.4 ETL 110-1-151, "Erosion Control to Meet NPDES Requirements," November 30, 1991

3.5.1.5 60 FR 50804, "Final National Pollutant Discharge Elimination System Storm Water Multi-Sector General Permit for Industrial Activities," September 29, 1995

3.5.1.6 63 FR 7858, "Reissuance of NPDES General Permits for Storm Water Discharges From Construction Activities", February 17, 1998.

3.5.1.7 63 FR 36490, "Reissue of NPDES General Permits for Storm Water Discharges from Construction Activities in Region 6," July 6, 1998.

3.5.1.8 63 FR 52430, "Final Modification of the National Pollutant Discharge Elimination System (NPDES) Storm Water Multi-Sector General Permit for Industrial Activities; Termination of the EPA NPDES Storm Water Baseline Industrial General Permit," September 30, 1998.

3.5.1.9 64 FR 68722, "National Pollutant Discharge Elimination System Regulations for Revision of the Water Pollution Control Program Addressing Storm Water Discharges," December 8, 1999

3.5.2 Design Guidance. Current policy is that the Corps will obtain the NPDES Storm Water Discharge Permit for Construction Contracts. In compliance with the requirements of a General Permit for Storm Water Discharges from Construction Sites, designers shall prepare and submit to the Project Manager a storm water pollution prevention plan (SWPPP) for all sites 5 acres in size or greater. A December 8, 1999 EPA final rule designates that construction sites (equal to or greater than 1 acre and less than 5 acres) must also be addressed in the NPDES program by March 2003. Many states and municipalities are issuing storm water criteria that are more stringent than the Federal requirements. The SWPPP must meet all State and local storm water requirements in addition to the Federal requirements. The Corps of Engineers will be responsible for submitting the Notice of Intent (NOI) and pollution prevention plan for each project. Pollution prevention measures must be in place before any construction or other earth disturbance may take place.

The designer is responsible for coordinating with the Technical Leader and the installation to determine if the installation will be obtaining a storm water permit for operation of the new facility. If the installation will be obtaining a storm water permit to operate the facility, the

design shall include any features necessary for the level of storm water monitoring and Best Management Practices (BMP) required by the permit. If an operational storm water permit is not required, the Corps of Engineers will assist the installation in preparing the Notice of Termination (NOT) of the construction storm water permit once all construction activities for the project have been completed and all areas are finally stabilized.

4. **AIR QUALITY AND PREVENTION OF AIR POLLUTION**:

4.1 **Reference.**

4.1.1 P.L. 91-604, "Clean Air Act," as amended, including P.L. 101-549, "Clean Air Act Amendments of 1990", 42 U.S.C. 1857h-7, et seq., 42 U.S.C. 7401 et seq.

4.1.2 40 CFR Part 82, "Protection of Stratospheric Ozone"

4.1.3 ETL 91-7, "Chlorofluorocarbon (CFC) Limitation in Heating, Ventilating, and Air-Conditioning Systems," August 21, 1991

4.1.4 TM 5-815-1, "Air Pollution Control Systems for Boilers and Incinerators," May 9, 1988

4.1.5 ASHRAE Standard 62-1989, "Ventilation for Acceptable Indoor Air Quality"

4.1.6 ETL 1110-3-438, "Indoor Radon Prevention and Mitigation," September 15, 1993

4.2 **Design Guidance.** Identify any air emissions from the new facility which are regulated under the Clean Air Act. At a minimum, emissions containing asbestos, beryllium, carbon monoxide, hydrocarbons, mercury, oxides of nitrogen, particulates, and/or sulfur dioxide must be provided with emission controls in accordance with the Clean Air Act. In addition, the designer is responsible for meeting the design criteria of all applicable regulations at the time of design.

The designer shall specify equipment that complies with 40 CFR Part 82. Safe alternatives and products containing safe alternatives to Class I and II ozone-depleting substances shall be utilized in the design, unless otherwise approved. To comply with 40 CFR 83 Subpart F, project specifications should include

requirements to evacuate and recycle refrigerants in all appliances, including air conditioners and chillers, to be removed from service (demolished) by the project.

Air pollution regulations are rapidly changing at the both the Federal and State level. It is the designer's responsibility to stay abreast of new design requirements in the field of air pollution control. Emission standards are expected to become more stringent as individual states address secondary ambient air quality standards under the Clean Air Act. To the extent possible, engineering decisions should be made to accommodate future additions or modifications at a minimum cost.

ETL 1110-3-438 provides design guidance for the prevention and mitigation of indoor radon. The design requirements are mandatory for all new construction and substantially altered facilities on Army installations. The Army installation will provide data on the level of indoor radon in facilities near the project. This data will serve as the basis for establishing the level of design required in accordance with ETL 1110-3-438.

The design shall include measures to control the emission of air pollutants, particularly dust, during construction. Burning shall not be allowed unless the plans and specifications contain measures to control air pollution. In cases where burning is allowed, the specifications should include provisions for obtaining a burning permit.

5. **SOLID WASTE (NON-HAZARDOUS)**:

5.1 **Reference.**

5.1.1 P.L. 89-272, "Solid Waste Disposal Act" (SWDA), as amended by P.L. 94-580, the "Resource Conservation and Recovery Act" (RCRA), 42 U.S.C. 6901 et seq.

5.1.2 P.L. 102-386, "Federal Facility Compliance Act "of 1992," 42 U.S.C. 6961 et seq.

5.1.3 DoD Directive 4165.60, "Solid Waste Management - Collection, Disposal, Resource Recovery, and Recycling Program," October 4, 1976

5.1.4 TM 5-814-5, "Sanitary Landfill," January 15, 1994

5.1.5 TM 5-634/AFR 91-8, "Solid Waste Management," May 1990

5.1.6 EO 12780 Federal Agency Recycling and the Council on Federal Recycling and Procurement Policy, October 31, 1991

5.1.7 DoD Directive 4145.19-1 Storage and Handling

5.1.8 EP 200-2-3 Environmental Compliance Guidance and Procedures, October 30, 1996

5.1.9 EO 13101 "Greening the Government Through Waste Prevention, Recycling, and Federal Acquisition," September 14, 1998

5.2 **Design Guidance.** The designer shall calculate the volume of waste which will be generated by the new facility and provide appropriate design features for solid waste management. In most cases, the design will only require that dumpster pads be provided to accommodate the waste volume generated. In more complex projects, trash compactors, sorting bins, and/or storage areas may be required. The designer shall identify any solid waste management problems that may result from operation of the new facility and notify the Project Manager, who will coordinate a design solution with the installation. The design should consider opportunities for pollution prevention through source reduction, recycling, treatment, and disposal in an environmentally acceptable manner.

6. **HAZARDOUS, TOXIC, AND RADIOACTIVE WASTES (HTRW):**

6.1 **General Reference.**

6.1.1 P.L. 89-272, "Solid Waste Disposal Act" (SWDA), as amended, P.L. 94-580, including the "Resource Conservation and Recovery Act" (RCRA), 42 U.S.C. 6901 et seq.

6.1.2 P.L. 102-386, "Federal Facility Compliance Act of 1992," 42 U.S.C. 6961 et seq.

6.1.3 P.L. 94-469, "Toxic Substances Control Act" (TSCA), as amended, 15 U.S.C. 2601, et seq.

6.1.4 P.L.99-499, "Comprehensive Environmental Response, Compensation and Liability Act of 1980" (CERCLA), as amended, 42 U.S.C. 9601,

6.1.5 40 CFR Part 112, "Oil Pollution Prevention"

6.1.6 40 CFR 264, "Standards for Owners and Operators of Hazardous Waste Treatment, Storage, and Disposal Facilities," latest version

6.1.7 40 CFR 265, "Interim Status Standards for Owners and Operators of Hazardous Waste Treatment, Storage, and Disposal Facilities", latest version.

6.1.8 ETL 1110-3-459, "Hazardous Waste Storage Criteria," November 30, 1993

6.1.9 Public Law 102-550, "The Residential Lead-based Paint Reduction Act of 1992", 42 U.S.C. 4851 et seq.

6.1.10 EP 1110-1-11, "Asbestos Abatement Guideline Detail Sheets," 15 July 1992

6.1.11 American Petroleum Institute (API) Standards and Publications

6.1.12 ER 1110-1-263, "Chemical Data Quality Management for Hazardous, Toxic and Radioactive Waste Remedial Activities," April 30, 1998

6.1.13 ER 385-1-92, "Safety and Occupational Health Document for Hazardous, Toxic and Radioactive Waste (HTRW) and Ordnance and Explosive Waste (OEW) Activities," March 18, 1994

6.1.14 ER 200-2-3, "Environmental Compliance Policies," October 30, 1996

6.1.15 29 CFR 1910.120 and 1926.65, "Hazardous Waste Operations and Emergency Response"

6.1.16 29 CFR Subpart Z, "Toxic and Hazardous Substances"

6.1.17 EM 385-1-1, "COE Safety and Health Requirements Manual", September 3, 1996

6.1.18 "Sampling Protocol for Building Demolition Debris and Buildings Painted with Lead-Based Paint", U.S. Army Environmental Hygiene Agency (USAEHA)

6.1.19 AFI 32-7044m "Storage Tank Compliance", 25 April 1994

6.1.20 USAF Occupational Safety and Health Standard 127-43, "Flammable and Combustible Liquids," September 21, 1980

6.1.21 USAF Occupational Safety and Health Standard 127-4-, "Fuel Storage Systems," February 7, 1980

6.1.22 EM 1110-3-178, "Removal of Underground Storage Tanks (UST)," August 31, 1993.

6.1.23 EP 200-2-3, "Environmental Compliance Guidance and Procedures," October 30, 1996

6.1.24 PL 93-633, "Hazardous Materials Transportation Act of 1974," 49 U.S.C. 5101 et seq.

6.1.25 DoD Directive 6050.8 Storage and Disposal of Non-DoD Owned Hazardous or Toxic Materials on DoD Installations, February 27, 1986

6.1.26 ETL 1110-3-491, "Sustainable Design for Military Facilities," January 31, 2000.

6.1.27 Executive Order 13101, "Greening the Government Through Waste Prevention, Recycling, and Federal Acquisition", September 14, 1998.

6.1.28 EP 1110-1-28, Lead Hazard Risk Assessment for Target Housing/Child Occupied Facilities Standard Scope of Work, March 31, 2000

6.1.29 EP 1110-1-29, Lead Hazard Clearance Inspection Standard Scope of Work, final version pending as of May 2000.

6.1.30 EP 1110-1-30, Pre-Design Lead/Asbestos Surveys Standard Scope of Work, final version pending as of May 2000.

6.2 **Asbestos Containing Material (ACM).** The Technical Leader will provide the designer with information as to whether existing facilities impacted by a project contain ACM. If ACM is present, the Technical Leader will identify how it will be addressed. The designer's role can vary from preparing the abatement specifications, to inserting specifications and notes prepared by others, to doing nothing because the problem is addressed under separate contract. If this information is not provided, the designer is responsible for requesting it at the pre-design conference. If the designer is required to conduct a

survey for ACM and/or develop plans and specifications for abatement of ACM, the following actions shall be completed.

6.2.1 Survey:

6.2.1.1 Review as-built drawings, if available, to identify where ACM may be located.

6.2.1.2 Inspect the structure(s) to identify all potential ACM.

6.2.1.3 Collect representative samples of the suspected ACM.

6.2.1.4 Present the results of the ACM survey, providing the following information:

6.2.1.4.1 Sampling and testing methodologies.

6.2.1.4.2 Photos of all sampling locations.

6.2.1.4.3 A summary of all test results.

6.2.1.4.4 Quantities of ACM requiring abatement.

6.2.1.4.5 All field and laboratory data in appendices.

6.2.2 Plans & Specifications:

6.2.2.1 Review the survey, if conducted by others, to ensure the items listed above are included. If data is missing, notify the Technical Leader and request guidance.

6.2.2.2 Present all test data, clearly identifying where the samples were collected.

6.2.2.3 Identify the quantity of ACM to be abated, using suitable units of measure such as LF, SF, EA. Avoid lump sum items.

6.2.2.4 Edit the appropriate guide specification, usually Section 2080, to reflect the specific job requirements.

6.2.2.5 Ensure that adequate information is presented for the bidders to determine the amount of ACM present, the abatement methods that may be used, worker protection requirements, and disposal requirements.

6.3 **Lead Based Paint (LBP).** The Technical Leader will provide the designer with information as to whether or not existing facilities impacted by a project contain LBP. If LBP is present, the Technical Leader will identify how it will be addressed. The designer's role can vary from preparing the abatement specifications, to inserting specifications and notes prepared by others, to doing nothing because the problem is addressed under separate contract. If this information is not provided, the designer is responsible for requesting it at the pre-design conference. If directed to prepare the LBP abatement plans and specifications, the designer should determine if the USAEHA Sampling Protocol is approved by the State regulatory agency with jurisdiction over the project site. If the Protocol is approved by the State, complete the survey discussed in paragraph 6.3.1 Survey and prepare plans and specifications in accordance with the USAEHA Sampling Protocol. If the Protocol is not approved by the State, prepare plans and specifications in accordance with paragraphs 6.3.1 Survey and 6.3.2 Plans and Specifications.

6.3.1 Survey:

6.3.1.1 Review as-built drawings, if available, to identify where LBP may be located.

6.3.1.2 Screen the structure(s) to identify all potential surfaces with LBP. Screening may be done by collecting paint chip samples for analysis or by using an XRF spectrometric analyzer. Results greater than 0.5% by weight or 1.O mg/cm^2, respectively, are considered positive and require abatement.

6.3.1.3 Collect representative samples of the suspected LBP surfaces for the Toxicity Characteristic Leaching Procedure (TCLP) and for total lead testing. The samples should cover the different substrates and the range of lead contents present. The samples should typically consist of both the paint and the substrate on which it is applied. The goal of this testing program is to provide the Contractor with enough information to determine disposal requirements for LBP debris generated by the project, and not to generate all of the data needed for disposal.

6.3.1.4 Present the results of the LBP survey, providing the following information:

6.3.1.4.1 Sampling and testing methodologies.

6.3.1.4.2 Photos of all sampling locations.

6.3.1.4.3 A summary of all test results.

6.3.1.4.4 Quantities of LBP requiring abatement.

6.3.1.4.5 All field and laboratory data in appendices.

6.3.2 Plan & Specifications:

6.3.2.1 Review the survey, if conducted by others, to ensure the items listed above are included. If data is missing, notify the Technical Leader and request guidance.

6.3.2.2 Present all test data, clearly identifying where the samples were collected.

6.3.2.3 Identify the quantity of LBP to be abated, using suitable units of measure such as LF, SF, EA. Avoid lump sum items.

6.3.2.4 Edit the appropriate guide specification, usually Section 2090, to reflect the specific job requirements.

6.3.2.5 Ensure that adequate information is presented to allow the bidders to determine the amount of LBP present, the abatement methods that may be used, worker protection requirements, and disposal requirements.

6.4 **Polychlorinated Biphenyls (PCBs).** If electrical equipment is to be removed as part of the project, the installation will identify equipment that contains PCBs. On the demolition drawings, identify PCB-containing equipment to be removed and provide notes or specifications on how to handle, transport, and dispose of the equipment. If the PCB content of electrical equipment is not available, identify the equipment on the drawings and include a specification section for sampling and testing the oils for PCB before removal and disposal of the equipment.

Fluorescent lights manufactured before 1979 may have ballast containing PCB. In addition, the ballast for lights manufactured between 1979 and 1985 may have a wet capacitor that contains hazardous solvents. Fluorescent lights usually also contain mercury. The designer should identify the quantity of existing fluorescent lights to be removed during the demolition

phase of a project. Identify the number of lights to be removed, the number of lamps within each light, and the length of each. Also distinguish between F40 and F96 lamps. Include this data in the plans and specifications, and specify the handling, removal, recycling and/or disposal of the fixtures.

6.5 **HTRW other than ACM, LBP, and PCBs.** The designer shall notify the Technical Leader of any hazardous waste that might be generated during construction of the new facility or rehabilitation/demolition of existing structures. The Technical Leader will determine how the issue is to be addressed by the designer. Mercury is often found in old electrical switches and fluorescent lamps and should be identified.

6.6 **Industrial Facilities.** Renovation and alteration of existing industrial facilities present varying problems of an environmental nature. The designer should evaluate current and past activities at the facility to determine if they may impact the proposed construction. Activities that might be of concern include, but are not limited to the following: storage of lead-acid batteries inside or outside of the facility; painting activities using lead, chromium, cadmium or mercury based paints; storage of materials that would be classified as hazardous or acutely hazardous wastes; rifle range bullet traps and deflectors; metal plating areas; and degreasing areas. A careful evaluation of industrial facilities should be made early in the design process to determine:

6.6.1 If any testing is needed to evaluate the presence, level, and extent of contamination.

6.6.2 If waste resulting from the construction activities requires special handling or disposal.

6.6.3 What types of worker protection are needed, if any.

6.6.4 What type of monitoring and/or sampling is needed to protect workers, nearby residents, and the environment.

6.7 **Installation Restoration Program (IRP) Sites.** Typically, new construction will not be placed where an environmental problem is known; however, IRP sites may be nearby. These sites are either suspected or known to have a release of contaminants to the environment. Depending on the IRP site's proximity to the new facility, the type of contamination, and the media impacted, it may be necessary to screen the site to determine

worker protection requirements and disposal options for the impacted media. The designer should request that any IRP sites near the proposed project be discussed during the pre-design meeting, so that required actions can be started early in the design process.

6.8 **Above-ground and Underground Storage Tanks.** Although storage tanks do not all contain substances classified as waste, tanks are regulated under RCRA. Tanks and associated plumbing shall meet all Federal, State, and local requirements for spill/overflow prevention, double containment, monitoring, and vapor emissions. An underground storage tank (UST) contained in a water-tight, concrete vault is regulated as an aboveground storage tank (AST) and is the preferred design. A vaulted UST does not exempt the design from complying with requirements for buried fuel lines, particularly pressurized lines. If a direct-buried, double-walled tank with leak detection is to be used instead of a vaulted tank, coordinate with the installation to provide a monitoring system which is compatible with the installation's monitoring capabilities. Above-ground storage tanks must have secondary containment facilities and meet criteria for fire safety and vehicle impact. Projects on Air Force installations shall comply with USAF Occupational Safety and Health Standards 127-40 and 127-43 and AFI 32-7044.

6.9 **Waste Storage Facilities.** Hazardous waste storage facilities shall be designed in accordance with 40 CFR 264 and 29 CFR 1910, as a minimum. Where state or local criteria are more stringent, they will prevail. Facilities shall provide a safe, adequate, and secure storage in austere, cost-effective facilities in accordance with ETL 1110-3-459.

6.10 **Health and Safety.** When hazards from asbestos, lead based paint, mercury, PCBs, organic contaminants, and inorganic contaminants are present, specific safety measures are required. If these hazards are present, the construction contract documents shall include requirements for safety, health, and emergency response and protection of occupational safety and health.

7. FEDERAL, STATE, AND LOCAL PERMITS:

All project features addressed in this chapter shall be designed in accordance with the Federal, State, and local permits necessary to construct and operate each feature. Designers are responsible for identifying these permits. If the

permit is necessary to construct the facility, the designer shall complete the permit application and shall submit it to the Technical Leader for filing with the appropriate regulatory agency. Submission of the application to the Technical Leader shall occur with sufficient time to obtain the permit prior to advertisement of the project for construction. Any permit actions required by the Contractor during construction shall be included in the plans and specifications. For permits required to operate the facility, the designer's responsibility is limited to identifying the permit and ensuring the design complies with permit requirements.

CHAPTER XIII

GEOTECHNICAL

Table of Contents

1. PURPOSE
   1.1 Metrication

2. REFERENCES
   2.1 Army Technical Manuals
   2.2 Engineer Manuals
   2.3 Engineer Regulations
   2.4 Engineer Technical Letters
   2.5 Miscellaneous

3. GEOTECHNICAL INVESTIGATIONS
   3.1 Scope of Investigations
      3.1.1 Preconcept and Site Selection Studies
      3.1.2 Concept Studies
      3.1.3 Final Design Studies
   3.2 Survey of Available Information
   3.3 Field Investigations
   3.4 Sampling
   3.5 Field Tests
   3.6 Groundwater Observations
   3.7 Inspection
   3.8 Boring Logs
   3.9 Geophysical Explorations
   3.10 Investigations along Proposed Utility Routes
   3.11 End of Field Investigations
   3.12 Disposition of Samples

4. LABORATORY TESTING
   4.1 General Considerations
   4.2 Index and Classification Tests
   4.3 Engineering Property Tests - Soils
   4.4 Engineering Property Tests - Rock

5. FOUNDATION DESIGN ANALYSIS
   5.1 Engineering Evaluation
      5.1.1 Bearing Capacity Analysis
      5.1.2 Settlement or Consolidation
      5.1.3 Slope Stability
      5.1.4 Dewatering and Groundwater Control

5.2 Selection of Recommended Foundation Type
5.2.1 General Considerations
5.2.2 Spread Footings
5.2.3 Drilled Piers
5.2.4 Pile Foundations
5.2.5 Ribbed Mat Slabs

5.3 Geotechnical Parameters for Ribbed Mat Foundations
5.3.1 Soil-Structure Interaction Modes
5.3.2 Center Lift Parameters for Structural Design
5.3.3 Edge Lift Parameters for Structural Design

6. PAVEMENT DESIGN ANALYSIS
6.1 Airfields and Heliports
6.2 Roads, Streets, and Open Storage Areas
6.3 Parking Areas
6.4 Soil Stabilization
6.5 Review by TSMCX

7. REPORT OF SUBSURFACE AND DESIGN INVESTIGATIONS

APPENDIX A - GEOTECHNICAL DESIGN/REVIEW CHECKLIST

CHAPTER XIII

GEOTECHNICAL

1. **PURPOSE**. The purpose of the following criteria is to provide information that will clarify and supplement the standard criteria and design guidance for geotechnical investigations and for the development and presentation of Foundation Design Analyses and Pavement Design Analyses.

1.1 **Metrication**. The metric units used are the International System of Units(SI)adopted by the U.S. Government as described in Chapter I, Paragraphs 3 and 4.2.1.

2. **REFERENCES**.

NOTE: Army Technical Manuals, Engineer Manuals, Engineer Regulations, and Engineer Technical Letters are available from Headquarters, U.S. Army Corps of Engineers on the Internet at http://www.hnd.usace.army.mil/techinfo/index.htm.

2.1 **Army Technical Manuals**.

2.1.1 TM 5-809-12, Concrete Floor Slabs on Grade Subjected to Heavy Loads, 25 Aug 1987.

2.1.2 TM 5-818-1, Soils and Geology Procedures for Foundation Design of Buildings and Other Structures (Except Hydraulic Structures), 21 Oct 1983.

2.1.3 TM 5-818-6, Grouting Methods and Equipment, 27 Feb 1970.

2.1.4 TM 5-818-7, Foundations in Expansive Soils, 1 Sep 1983.

2.1.5 TM 5-818-8, Engineering Use of Geotextiles, 20 Jul 1995.

2.1.6 TM 5-822-5, Pavement Design for Roads, Streets, Walks, and Other Open Storage Areas, 12 Jun 1992.

2.1.7 TM 5-822-7, Standard Practice for Concrete Pavements, 16 Aug 1987.

2.1.8 TM 5-822-8, Bituminous Pavements - Standard Practice, 30 Jul 1987.

2.1.9 TM 5-822-9, Repair of Rigid Pavements Using Epoxy Resin Grouts, Mortars, and Concretes, 20 Jan 89.

2.1.10 TM 5-822-10, Standard Practice for Pavement Recycling, 26 Aug 88.

2.1.11 TM 5-822-11, Standard Practice for Sealing Joints and Cracks in Rigid and Flexible Pavements, 16 Jun 93.

2.1.12 TM 5-822-13, Pavement Design for Roads, Streets, and Open Storage, 24 Oct 1994.

2.1.13 TM 5-822-14, Soil Stabilization for Pavements, 25 Oct 1994.

2.1.14 TM 5-825-1, General Provisions for Airfield/Heliport Pavements Design, 9 Mar 1994.

2.1.15 TM 5-825-2-1, Flexible Pavement Design for Airfields (Elastic Layered Method), 27 Nov 1989.

2.1.16 TM 5-825-3, Rigid Pavements for Airfields, 11 Aug 1988.

2.2 **Engineer Manuals**.

2.2.1 EM 1110-1-1802, Geophysical Exploration for Engineering and Environmental Investigations, 31 Aug 1995.

2.2.2 EM 1110-1-1804, Geotechnical Investigations, 29 Feb 1984.

2.2.3 EM 1110-1-1904, Settlement Analysis, 30 Sep 1990.

2.2.4 EM 1110-1-1905, Bearing Capacity of Soils, 30 Oct 1992.

2.2.5 EM 1110-1-1906, Soil Sampling, 30 Sep 1996.

2.2.6 EM 1110-1-2908, Rock Foundations, 30 Nov 1994.

2.2.7 EM 1110-2-1614, Design of Coastal Revetments, Seawalls, and Bulkheads, 30 Jun 95.

2.2.8 EM 1110-2-1810, Coastal Geology, 31 Jan 95.

2.2.9 EM 1110-2-1902, Stability of Earth and Rock-fill Dams, 1 Apr 1970.

2.2.10 EM 1110-2-1909, Calibration of Laboratory Soils Testing Equipment, 1 Dec 1970.

2.2.11 EM 1110-2-1913, Design and Construction of Levees, 31 Mar 96.

2.2.12 EM 1110-2-2006, Roller Compacted Concrete, 01 Feb 92.

2.2.13 EM 1110-2-2502, Retaining and Flood Walls, 29 Sep 89.

2.2.14 EM 1110-2-2504, Design of Sheet Pile Walls, 31 Mar 94.

2.2.15 EM 1110-2-2906, Design of Pile Foundations, 15 Jan 1991.

2.2.16 EM 1110-2-3301, Design of Beach Fills, 31 Mar 95.

2.2.17 EM 1110-2-3506, Grouting Technology, 20 Jan 1984.

2.2.18 EM 1110-2-3800, Systematic Drilling and Blasting for Surface Excavation, 01 Mar 72.

2.3 **Engineer Regulations**.

2.3.1 ER 1110-1-1807, Procedures for Drilling in Earth Embankments, 30 Sep 1997.

2.3.2 ER 1110-1-8100, Laboratory Investigations and Testing, 31 Dec 1997.

2.3.3 ER 1110-2-8152, Planning and Design of Temporary Cofferdams and Braced Excavations, 31 Aug 94.

2.3.4 ER 1110-3-104, Family Housing Design, 30 Jun 94.

2.3.5 ER 1110-34-1, Transportation Systems Mandatory Center of Expertise, 10 Jan 1990.

2.4 **Engineer Technical Letters.**

2.4.1 ETL 1110-1-125, Guidance for Fuel Resistant Sealers for Pavement, 4 May 1984.

2.4.2 ETL 1110-1-129, Use of Engineering Fabrics and Asphalt Rubber Interlayer to Minimize Reflective Cracking in Pavements, 15 Dec 1985.

2.4.3 ETL 1110-1-138, Standard Penetration Test, 31 Mar 1988.

2.4.4 ETL 1110-1-139, Selecting Asphalt Cements, 22 Jun 1990.

2.4.5 ETL 1110-1-141, Thickness Design of Roller-Compacted Concrete Pavements for Airfields, Roads, Streets, and Parking Areas, 29 Jan 1988.

2.4.6 ETL 1110-2-282, Rock Mass Classification Data Requirements for Rippability, 30 Jun 1983.

2.4.7 ETL 1110-2-300, Characterization and Measurement of Discontinuities in Rock Slopes, 31 Oct 1983.

2.4.8 ETL 1110-3-393, Design of Surfaced Areas, 28 Oct 1988.

2.4.9 ETL 1110-3-394, Aircraft Characterizations for Airfield/Heliport Design and Evaluation, 27 Sep 1991.

2.4.10 ETL 1110-3-435, Drainage Layers for Pavements, 1 May 1992.

2.4.11 ETL 1110-3-471, Design and Construction of Conventionally Reinforced Ribbed Mat Slabs (RRMS), 25 Sep 1995.

2.4.12 ETL 1110-3-474, Cathodic Protection, 14 Jul 1995.

2.2.13 ETL 1110-3-475, Roller Compacted Concrete Pavement Design and Construction, 10 Oct 1995.

2.4.14 ETL 1110-3-486, Army Airfield/Heliport Pavement Design, 3 Nov 1997.

2.4.15 ETL 1110-3-487, Use of Petroleum Contaminated Soil in Cold Mix Asphalt Stabilized Base Course, 1 Mar 1998.

2.4.16 ETL 1110-3-488, Design and Construction Management Practices for Concrete Pavements, 01 Mar 98.

2.4.17 ETL 1110-9-10(FR), Cathodic Protection System Using Ceramic Anodes, 05 Jan 91.

2.5 **Miscellaneous.**

2.5.1 Annual Book of ASTM Standards, American Society of Testing and Materials.

2.5.2 Munsell Soil Color Charts (standard), Part No. 50216; Supplementary (tropical and subtropical), Part No. 50021; GretagMacbeth, New Windsor, NY, (914)565-7660 or (800)622-2384.

3. **GEOTECHNICAL INVESTIGATIONS**.

3.1 **Scope of Investigations.**

3.1.1 Preconcept and Site Selection Studies. Geotechnical investigations during preconcept and site selection studies should be performed to a level that insures adequate information on general subsurface conditions and any special treatment or foundation requirements such as deep foundations. This information should be sufficiently complete to permit selection of the most favorable site within the study area, determine the general type of structure that would be best suited to the site conditions, assess the geotechnical aspects of environmental impact, and ascertain the costs of the project. The scope of the investigations should not be greater than that scope necessary to accomplish these goals. For projects on existing military installations much of the geotechnical information needed for preconcept and site selection studies will be available and additional investigations will be minimal. Results of geotechnical investigations should be compiled in summary reports.

3.1.2 Concept Studies. Geotechnical investigations for concept studies should advance the information to that required for design and budget development that would constitute approximately 35 percent of total design. Reporting of the results of geotechnical investigations presents additional emphasis on selection of foundation types and the influences of subsurface conditions.

3.1.3 Final Design Studies. Geotechnical investigations for final design should provide additional information to the preconcept and concept investigations for a complete design. Final design studies provide a complete set of working drawings, technical specifications, design analyses, and detailed cost estimate for the project. Reporting of the geotechnical investigations will place further emphasis on analyses for selection of foundation types and details of the foundation design.

3.2 **Survey of Available Information**. Information obtained from previous geotechnical investigations may be available and pertinent to the proposed project, especially if the proposed

project is located on a military installation. District archives contain boring logs, laboratory test data, and foundation and paving design analyses from previous investigations. The supervising District can provide access to this information.

3.3 **Field Investigations.**

3.3.1 Location and Protection of Underground Utilities.

3.3.1.1 General. The location of underground utilities must be determined and those utilities, and all other utilities, protected from possible damage during drilling and excavating activities.

3.3.1.2 Drilling Permit. A permit is required prior to drilling or excavating on any military installation. This permit is available from the Base Civil Engineer (Air Force) or from the Department of Public Works (Army). Two weeks should be allowed for processing to obtain this permit. Coordination for utility clearances will accompany approval of the permit; electrical (both overhead and underground), gas, steam, water, storm sewer, wastewater (sanitary) sewer, and cable TV will usual be located upon receipt of permit. Telephone lines are the responsibility of the Signal Corps (Army) and may require separate notification. Fuel lines near flight lines (Air Force) may not be located during processing of the permit and may require assistance from flight line personnel.

3.3.1.3 Utility Clearances. Clearances must be obtained from individual utilities prior to drilling or excavating at sites not on military installations. The project site must also be checked for interstate high-pressure gas lines and communication cables.

3.3.1.4 Protection of the Environment. After the locations for proposed borings have been determined, route of access to the area and specific boring locations should be selected with care in order to minimize damage to the environment. For military projects, environmental clearances, including archeology clearances, may be obtained from the BCE or the DPW.

3.3.2 Borings.

3.3.2.1 Location and Spacing.

Borings spaced in a rigid pattern often do not disclose unfavorable subsurface conditions; therefore, boring locations should be selected to define geological units and subsurface non-conformities. Borings may have to be spaced at 40 feet or less when erratic subsurface conditions are encountered, in order to delineate lenses, boulders, and other irregularities. When localized building foundation areas are explored, initial borings should be located near building corners, but locations should allow some final shifting on the site. The number of borings should never be less than three and preferably five: one at each corner and one at the center, unless subsurface conditions are known to be uniform and the foundation area is small. These preliminary borings must be supplemented by intermediate borings as required by the extent of the area, location of critical loaded areas, subsurface conditions, and local practice.

3.3.2.2 Depth of Borings. The required depth of exploration may be only 1.5 to 3 meters (5 to 10 feet) below grade for residential construction and lightly loaded warehouses and office buildings, provided highly compressible soils are known to not occur at greater depths. For important or heavily loaded foundations, borings must extend into strata of adequate bearing capacity and should penetrate all soft or loose deposits even if overlain by strata of stiff or dense soils. The borings should be of sufficient depth to establish if groundwater will affect construction, cause uplift, or decrease bearing capacity. When pumping quantities must be estimated, at least two borings should extend to a depth that will define the aquifer depth and thickness. Borings may generally be stopped when rock is encountered or after a penetration of 1.5 to 6 meters (5 to 20 feet) into a strata of exceptional stiffness. To assure that boulders are not mistaken for bedrock, rock coring for 1.5 to 3 meters (5 to 10 feet) is required. When an important structure is to be founded on rock, core borings should penetrate the rock sufficiently to determine quality and character and the depth and the thickness of the weathered zone. Rock coring is expensive and slow, and the minimum size standard core diameter should be used that will provide good cores. NX or larger core sizes may be required in some rock strata. Core barrels can remove cores in standard 1.5-, 3-, 6-meters (5-, 10-, and 20-feet)lengths; actual core may be much fractured, however. Detailed exploration should be carried to a depth that encompasses all soil strata likely to be significantly affected by the structure loading. If the structure is not founded on

piles, the significant depth is about 1½ to 2 times the width of the loaded area.

3.4 **Sampling**.

3.4.1 General. The sampling program may depend on drilling equipment available and on the laboratory facilities where the tests will be performed.

3.4.2 Recommended Undisturbed Sample Diameters.

TEST	Minimum Sample Diameter, mm (in)
Unit weight	76 (3.0)
Permeability	76 (3.0)
Consolidation, 2.75-inch	76 (3.0)
Consolidation, 4-inch	127 (5.0)
Unconfined compression	76 (3.0)
Triaxial compression *	127 (5.0)
Direct shear	127 (5.0)

* Triaxial test specimens are prepared by cutting a short section of 127-mm (5-inch) sample axially into four quadrants and trimming each quadrant to the proper size so that all specimens represent the same depth.

3.4.3 Recommended Minimum Sample Quantity.

TEST	Minimum Sample Dry Weight kg (lb)*
Water content	0.2 (0.5)
Atterberg limits	0.2 (0.5)
Shrinkage limits	0.2 (0.5)
Specific gravity	0.1 (0.2)
Grain-size analysis	0.2 (0.5)
Proctor Compaction	13.5 (30.0)
Permeability	0.9 (2.0)
Direct shear	0.9 (2.0)
Consolidation, 70-mm (2.75-in)	0.7 (1.5)
Consolidation, 102-mm (4-in)	0.9 (2.0)
Triaxial, 36-mm (1.4-inch) (4 points)	0.9 (2.0)
Triaxial, 72-mm (2.8-inch) (4 points)	4.5 (10.0)

* Fine grained material, all minus No.4 sieve.

3.5 **Field Tests**.

3.5.1 Standard Penetration Test. The standard penetration test (SPT) is literally a standard of the industry for soil sampling. Reference for this test is ASTM D 1586.

3.5.2 Cone Penetrometer. The cone penetrometer is less popular than the standard penetration test, but is an acceptable method of testing in situ materials. Use of the cone penetrometer should be expected to require 2 holes per boring location, especially if undisturbed samples are obtained.

3.5.3 Pocket Penetrometer. The pocket penetrometer should be used to estimate the relative consistency of cohesive soils from a specific boring in order to provide an accurate description of the soil. Readings from pocket penetrometers should not be used for design.

3.5.4 Soil Resistivity Test. Soil resistivity tests are performed to provide an estimate of the corrosive nature of the soils at a site in order to design cathodic protection. The soil resistivity test should be performed in accordance with ASTM G 57 and the instructions of the equipment manufacturer.

3.6 **Groundwater Observations.**

3.6.1 Borehole Observations. Water levels during and immediately after drilling should be measured and recorded on the field log of the boring with the date and time of the water level measurements and the date of the boring. The water level after 24 hours should also be measured and recorded on the log. Water level observations made in a borehole during or shortly after drilling may be misleading.

3.6.2 Observation Wells. Observation wells provide an accurate means for determining the groundwater level over a period of time. A temporary observation well could be constructed of 38-mm (1½-inch) diameter plastic pipe with slotted end placed in the borehole. The top few meters of the borehole should be sealed with tamped backfill to seal the borehole from surface infiltration.

3.7 **Inspection**.

A field inspector will be present during drilling and should be an experienced engineering geologist or geotechnical engineer. The duties shall include observing, classifying, and describing

geologic materials; selecting and preserving samples; logging and disposition of core samples; completing the boring logs; and recording information and data from field tests.

3.8 **Boring Logs**.

3.8.1 Field Logs.

A field log for each boring can provide an accurate and comprehensive record of the stratigraphy and lithology of soil and rock encountered with other relevant information obtained during drilling, sampling, and field testing. A field log will be prepared for each boring. A field log will be prepared for each excavation, which has the purpose of characterizing subsurface materials and geologic conditions. All field boring logs will be prepared in the inspector's own handwriting. All logs will provide the pertinent data for the borings including, but not limited to, name of project, boring location, drilling organization, boring number, name of drilling organization, name of driller, inclination of boring, size and type of drilling bit, date boring was started and date completed, elevation of top of hole, type and manufacturer's designation of drill, and number of samples and core boxes obtained.

3.8.2 Reproducible Boring Logs. Final logs for inclusion in design documents and in plans and specifications will be composed in the Computer-Aided Design and Drafting (CADD) System specified in the contract for services. Forms, symbols, and other graphic aids for preparation of the reproducible (CADD) boring logs are contained within the geotechnical cell library of the A/E/C CADD Standards Manual. Chapter VIII - Drawings, gives additional guidance.

3.9 **Geophysical Explorations**.

Geophysical explorations are not prohibited but should not be the main investigative technique and must be correlated with drilling and sampling.

3.10 **Investigations along Proposed Utility Routes**.

3.10.1 General. The primary purpose of investigations along proposed utility routes is to delineate common (soil) excavation from rock excavation for contract bidding. Visual logs prepared during excavations can provide considerable information. Samples of the excavated soil or rock can be obtained and submitted for classification tests.

3.10.2 Equipment. Conventional drilling equipment may be too costly and cumbersome to provide borings at selected locations along routes of the proposed utilities. Less expensive and more adaptive equipment and methods for obtaining shallow excavations in soil and soft rock include small locally available backhoes for the excavation of test pits and small locally available bulldozers and trenching machines for the excavation of shallow trenches. Power and manual augers and posthole diggers can be carried onto any location and can obtain samples from small shallow borings.

3.11 **End of Field Investigations**.

3.11.1 General. At the close of field investigations and related activities, the site will be restored to its initial condition. All boreholes, test pits, trenches, and other excavations must be backfilled.

3.11.2 Soil Backfill. Boreholes or excavations may be backfilled with random soil from borehole cuttings or excavation material, or from an offsite borrow source. The quality of the backfill material must be sufficient to prevent water movement or collapse. The soil backfill should be tamped to minimize additional settlement.

3.11.3 Grouting. To grout boreholes, the borehole should be grouted by injection through a grout pipe inserted to the bottom of the borehole, which will displace the water or drilling mud and fill the borehole with a continuous column of grout. The grout should contain bentonite or similar swelling material to inhibit shrinkage and ensure a good seal. A grout mixture of about 4 to 7 percent bentonite and 93 to 96 percent Portland cement is suitable for sealing boreholes. Sand may be added to the grout as filler if the proper mixing and pumping equipment is available.

3.11.4 Concrete. Concrete may be used for backfilling boreholes if a shrinkage inhibitor is added. Concrete should be placed in the bottom of the borehole by the tremie method to prevent segregation of the mixture and to ensure that water or drilling mud is displaced and the borehole is filled with a continuous column of concrete.

3.11.5 Special Considerations. Boreholes located near dams or levees, and boreholes located in areas of hazardous pollutants or in environmentally sensitive areas require special considerations for backfilling. For these sensitive locations,

special instructions will be provided by the supervising District.

3.12 **Disposition of Samples**.

3.12.1 Care and Handling of Samples. All samples of soil and rock shall be properly sealed and stored on the project site until transport to the testing laboratory. Special provisions are required during winter operations to prevent the samples from freezing. Undisturbed samples shall be transported in carriers in such manner as to prevent disturbance. Special cushioned racks are required to transport unopened samples from Denison barrel and other soil-coring samplers and to transport Shelby-tube or other thin-walled push samples. These samples must be transported vertically and with the top of the sample up. Undisturbed samples for classification and index tests must be sealed to preserve the natural moisture content. Upon arrival at the testing laboratory and after being logged in to the laboratory records, all samples will be stored in a moist room until time for preparation prior to testing.

3.12.2 Disposition of Soil Samples. Soil samples may be discarded once the testing program for which they were taken is complete. Soil samples are not normally retained for long periods of time because even the most careful sealing and storing procedures cannot prevent the physical and chemical changes that, in time, would invalidate any subsequent test results. This does not pertain to soil samples taken for other than traditional geotechnical purposes; soil samples taken for chemical content for environmental testing will require special considerations and instructions from the supervising District.

3.12.3 Disposition of Rock Samples. In general, rock cores will be retained until the detailed logs, photographs, and test data have been made a matter of permanent record.

4. **LABORATORY TESTING**

4.1 **General Considerations**.

4.1.1 Classification. Laboratory testing determines index values for identification and correlation by means of classification tests. Laboratory testing further defines the engineering properties in parameters usable for design of foundations. The Unified Soil Classification System, based on identification of soils according to grain-size distribution, plasticity characteristics, and grouping with respect to

behavior, will be used to classify soils in connection with foundation and pavement design. The geological classification of rock is complex, and for most engineering applications, a simplified system of classification, as presented in TM 5-818-1 (Reference 2.1.2), is adequate.

4.1.2 Guidance for Assigning Laboratory Tests. Guidance for assigning laboratory tests for developing foundation design parameters for buildings, other structures, and pavements is available in TM 5-818-1, Soils and Geology Procedures for Foundation Design of Buildings and Other Structures (Except Hydraulic Structures), 21 Oct 1983.
(Reference 2.1.2).

4.1.3 Reference Standards. Procedural methods for laboratory testing of geotechnical samples shall be as outlined in the specifications of the respective standard of the American Society for Testing and Materials (ASTM).

4.2 **Index and Classification Tests**.

TEST	REMARKS
Water content	Required for every sample except clean sands and gravels.
Atterberg limits	Required for every stratum of cohesive soil; always have associated natural water content of soil tested and compute liquidity index.
Grain-size analysis	Generally performed on sands and gravels with occasional tests on cohesive soils. Correlate with Atterberg limits for cohesive soils.
Slaking test	Performed on highly preconsolidated clays and clay shales where deep excavations are to be made or foundations will be near-surface. Wet and Dry cycles should be used.
Penetrometer	Performed on cohesive soils, undisturbed samples and intact chunks of disturbed samples. Regard results with caution; use mainly for consistency classification and as guide for assigning shear tests.

4.3 **Engineering Property Tests - Soils**.

4.3.1 Shear Strength.

4.3.1.1 Unconfined Compression Tests. Unconfined compression tests are performed on samples of cohesive soils, cemented soils (i.e., cement-stabilized soil), and (soft) rock. The test specimen is usually cut directly from a length of extruded sample from a thin-walled sampler or from a core barrel. Although test results may indicate a broad scatter, unconfined compression tests are the most common laboratory test to determine the strength of cohesive soils.

4.3.1.2 Triaxial Compression Tests. Triaxial compression tests are performed under three conditions of test specimen drainage. Tests corresponding to these drainage conditions are: unconsolidated-undrained triaxial (UU or Q) tests in which the water content is kept constant during the test; consolidated-undrained triaxial (CU or R) tests in which consolidation or swelling is allowed under initial stress conditions, but the water content is kept constant during application of shearing stresses; and consolidated-drained triaxial (CD or S) tests in which full consolidation or swelling is permitted under the initial stress conditions and also for each increment of loading during shear. The appropriate triaxial test should be selected to reflect the various prototype loading cases and drainage conditions. Normally, fine-grained soils are not subjected to consolidated-drained triaxial (CD or S) tests, but instead are subjected to direct shear tests.

4.3.1.3 Direct Shear Tests. Direct shear tests are performed on fine-grained soils instead of consolidated-drained triaxial (CD or S) tests. The value from the direct shear test is set as the angle of internal friction and the cohesion intercept is assumed to be zero.

4.3.1.4 Selection of Design Shear Strengths. Where the results from shear tests on undisturbed foundation soils and compacted soils do not show a significant drop in shear or deviator stresses after peak stresses are reached, the design shear strength can be chosen as the peak shear stress in direct shear tests, the peak deviator stress, or the deviator stress at 15 percent strain where the shear resistance increases with strain. For each soil layer, design shear strengths should be selected such that two-thirds of the test values exceed the assigned design values.

4.3.2 Consolidation and Swell. The parameters required to perform settlement and rebound analyses are obtained from consolidation tests on highly compressible clays or on compressible soils subjected to high stresses. The sequence and magnitude of test loading should approximate the various loading cases for which settlement and rebound analyses are to be performed. For expansive soils, the standard consolidation test or a modification of this test may be used to estimate both settlement and swell. Consolidometer swell tests tend to predict minimal levels of heave. Soil suction tests can be used to estimate swell, but tend to overestimate heave compared to field observations.

4.3.3 Compaction Tests.

4.3.3.1 Cohesive Soils. The modified Proctor compaction test (ASTM D 1557) will be the laboratory test to evaluate the compaction characteristics of cohesive borrow material or cohesive material from required excavations to be used as borrow. Traditionally, the modified Proctor compaction test has been used in military construction to correlate the relative compaction of fills and backfills for site grading, structural backfill, and pavement subgrades and bases.

4.3.3.2 Cohesionless Soils. The modified Proctor compaction test (ASTM D 1557) will be the laboratory test to evaluate the compaction characteristics of cohesionless borrow material or cohesionless material from required excavations to be used as borrow. The relative density tests for cohesionless soils (ASTM D 4253 and ASTM D 4254) have fallen into disfavor because of the inability to consistently reproduce the minimum density (ASTM D 4254).

4.4 **Engineering Property Tests - Rock**.

4.4.1 Unconfined Compression Test. For building foundation evaluation, the unconfined, uniaxial compression test is performed primarily to provide the unconfined compressive strength of a rock sample. The unconfined compressive strength can be used to provide allowable bearing capacity and to provide rippability for excavation.

4.4.2 Shales and Moisture-Sensitive Rocks.

4.4.2.1 General. Most moisture-sensitive rocks are sedimentary in origin or are their metamorphic equivalents. These rocks range from undurated clays to compaction shales, poorly to

moderately cemented sandstones, and the earthy rock types such as marl. As these rocks have soil-like characteristics, the index properties of these rocks should be determined prior to more comprehensive testing. The results of the index testing will usually indicate the engineering sensitivity of the rocks, and should be used as a guide to further testing.

4.4.2.2 Triaxial and Direct Shear Tests. Most triaxial and direct shear tests conducted on hard, brittle rock samples are of the undrained type. For hard, brittle rock, pore pressures do not play a dominant role, and strength values are in terms of total stress. However, as softer rock types are encountered with correspondingly higher absorption values (e.g., greater than 5 percent), the role of pore pressure buildup during the rock shearing process begins to become more important. The same condition is true for many clay shales and other similar weak and weathered rock types. For moisture-sensitive rocks, soil property tests should be used when possible. Critical pore pressures that may substantially reduce the net rock strength can be monitored throughout the entire testing cycle.

4.4.2.3 Test Data Interpretation. Laboratory test data on shales and moisture-sensitive rocks should be interpreted with caution. The laboratory undrained strength of intact specimens is rarely representative of in-place field shear strengths. Frequently, shales, clay shales, and highly overconsolidated clays are reduced to their residual shear strength with minor displacements. The geotechnical explorations, laboratory testing, and review of field experiences must establish whether residual or higher shear strengths are appropriate for design. Results of laboratory tests should be confirmed by analysis of the field behavior of the material from prior construction experience in the area, analysis of existing slopes or structures, and correlation with similar geologic formations at sites where the field performance is known.

5. **FOUNDATION DESIGN ANALYSIS**

5.1 **Engineering Evaluation**.

5.1.1 Bearing Capacity Analysis.

Reference 2.2.4, EM 1110-1-1905, Bearing Capacity of Soils

5.1.1.1 General. The shearing strength of soil, s_u, is a function of cohesion, c, of the soil, the angle of internal friction, ϕ, and confining pressure, p. Estimation of the

shearing strength is usually as: $s_u = c + p \tan \phi$. For cohesionless soils and for cohesive soils in long-term analyses, neither of which are affected by pore pressures, the effective angle of internal friction, ϕ', should be used (effective stress). For cohesive soils in short-term analyses, which are affected by pore pressures, the angle of internal friction, ϕ, should be used (total stress).

5.1.1.2 Preliminary Analyses. For cohesionless soils, estimate ϕ' from standard penetration tests (N-values) or cone penetration resistance. For cohesive soils and for short-term analysis, estimate s_u from standard penetration tests. For cohesive soils and long-term loading, estimate ϕ' from correlation with index properties for normally consolidated soils.

5.1.1.3 Detailed Design Analyses. For cohesionless soils, estimate ϕ' from standard penetration tests (N-values) or cone penetration resistance. For cohesive soils and for short-term analysis, determine s_u from unconsolidated-undrained (UU or Q) triaxial tests on undisturbed samples with confining pressure, σ_3, equal to overburden pressure. For long-term analysis, obtain ϕ' from drained direct shear tests on undisturbed samples. For transient loadings after consolidation obtain ϕ and c parameters from consolidated-undrained (CU or R) triaxial tests with pore pressure measurements on undisturbed samples.

5.1.1.4 Clay-Shale. The allowable bearing capacity of clay-shale and other soft, moisture-sensitive rock should be developed using the same procedures as for cohesive soils.

5.1.1.5 Factors of Safety. Factors of safety for design of structures on soils depend on the extent and detail of subsurface information. Typical factors of safety for design are presented in Table XIII-1.

TABLE XIII-1 Typical Factors of Safety

Structure	FS
Public buildings	3.5
Light industrial building	3.5
Apartments, offices	3
Warehouses (superflat floors)	>3
Warehouses (typical)	2.5
Footings	3
Mats	>3
Deep foundations	
With load tests	2
Driven piles (dynamic analysis)	2.5
Without load tests	3
Multilayer soils	4
Groups	3
Retaining walls	3
Temporary braced excavation	>2

5.1.1.6 Rock. The allowable bearing capacity of hard, massive rock should be developed from the results of unconfined compression tests on core samples. For estimating bearing capacity of the rock, a factor of safety of at least 10 is traditionally used.

5.1.2 Settlement or Consolidation.

Reference 2.2.3, EM 1110-1-1904, Settlement Analysis

5.1.2.1 Standard Analyses. For cohesionless soils, use design charts relating Standard Penetration Test (SPT) results or cone resistance with soil pressure and settlement. For cohesive soils, estimate the virgin compression index, C_c, from lab test data for the liquid limit, LL, natural water content, W_n, and initial void ratio e_o.

5.1.2.2 Detailed Analyses. For cohesionless soils, use the Schmertmann Approximation method with Standard Penetration Test (SPT) results or cone resistance. For cohesive soils, develop consolidation parameters from the results of consolidation tests on selected samples.

5.1.3 Slope Stability.

Reference 2.2.9, EM 1110-2-1902, Stability of Earth and Rock-fill Dams, 1 Apr 1970.

5.1.3.1 General. Stability Analyses are required on excavation slopes and embankment slopes. Guidance in this segment is for slopes in the soils routinely encountered within Southwestern Division. Slopes in soils that present special problems, such as stiff-fissured clays and shales, hydraulic fills, dredged material, and loess, and special loading conditions, such as earthquakes, are outside of the scope of this guidance.

5.1.3.2 Cohesionless Slopes on Firm Soil or Rock. The stability of slopes consisting of cohesionless soils depends on the angle of internal friction, ϕ, of the soil, the slope angle, the unit weight of the soil, and pore pressures. Slope failure normally occurs by surface raveling or shallow sliding. Where consequences of failure may be important, required slopes can be determined using simple infinite slope analysis. Values of ϕ' for stability analyses are determined from laboratory tests or estimated from the density of the sand. Correlation with SPT values can provide reasonable strength values. Values of $\phi = 25$ degrees for loose sands and $\phi = 35$ degrees for dense sands are conservative for most cases of static loading. If higher values are used these higher values should be justified by the results from R or S tests. Pore pressure due to seepage reduces slope stability, but static water pressure, with the same water level inside and outside the slope, has no effect. Benches, paved ditches, and planting on slopes can be used to reduce runoff velocities and to retard erosion. Saturated slopes in cohesionless soils may be susceptible to liquefaction and flow slides during earthquakes, while dry slopes are subject to settlement and raveling.

5.1.3.3 Cohesive Slopes Resting on Firm Soil or Rock. The stability of slopes consisting of cohesive soils depends on the strength of soil, the unit weight of the soil, the slope height, the slope angle, and pore pressures. Failure usually occurs by sliding on a deep surface tangent to the top of firm materials. For relatively high slopes that drain slowly, it may be necessary to analyze the stability for three limiting conditions.

5.1.3.3.1 Short-Term or End-of-Construction Condition. Analyze this condition using total stress methods, with shear strengths determined from unconsolidated-undrained (UU or Q) tests on

undisturbed samples. Shear strengths from unconfined compression tests may be used but generally may show more scatter. This condition is often the only one analyzed for stability of excavated slopes. The possibility of progressive failure or large creep deformations exists for safety factors less than about 1.25 to 1.50.

5.1.3.3.2 Long-Term Condition. If the excavation is open for several months or years, it may be necessary to analyze this condition using effective stress methods, with strength parameters determined from consolidated-undrained (CU or R) tests or consolidated-drained (CD or S) tests on undisturbed samples. Pore pressures are governed by seepage conditions and can be determined using flow nets or other types of seepage analysis. Both internal pore pressures and external water pressures should be included in the analysis.

5.1.3.3.3 Sudden Drawdown Condition. Analyze this condition using total stress methods, with shear strengths measured in R and S tests. Shear strength shall be based on the minimum of the combined R and S envelopes. This case is not normally encountered in excavation slope stability.

5.1.3.4 Effect of Soft Foundation Strata. The critical failure mechanism is usually sliding on a deep surface tangent to the top of an underlying firm layer. Short-term stability of an embankment over soft foundation strata is usually more critical than long-term stability. The strength of soft clay foundation strata should be expressed in terms of total stresses and determined using unconsolidated-undrained (UU or Q) tests on undisturbed specimens.

5.1.3.5 Methods of Stability Analysis. For simple slopes of excavations or embankments, the use of slope stability charts will provide adequate estimates of factors of safety. For complex slope geometry and complex layering of materials, the use of limit-equilibrium methods or finite element methods are required.

5.1.4 Dewatering and Groundwater Control. The evaluation and design of dewatering and groundwater control should be based on appropriate references and guidance in technical literature, field investigations, pump tests and seepage analysis as are appropriate.

5.2 **Selection of Recommended Foundation Type**.

5.2.1 General Considerations. Selection of an appropriate foundation depends upon the function of the structure, soil and groundwater conditions, construction schedules, construction economy, and other factors. Preliminary information concerning the purpose of the structure, loads, and subsurface conditions can be used to evaluate alternative types of foundations. Estimates of the total and differential foundation movements should be developed and their effect on the proposed structure should be evaluated.

5.2.2 Spread Footings.

5.2.2.1 Adequate Depth of Footings. The footing should be placed below the frost line because of volume changes that occur during freezing and thawing, and also below the depth where seasonal volume changes occur. The minimum depth below which seasonal volume changes do not occur is usually 1.2 meters (4 feet), but varies with location. On sloping ground, the footings should be placed at a depth such that they will not be affected by possible erosion.

5.2.2.2 Allowable Bearing Capacity. The allowable bearing capacity should be estimated from the strength of the foundation material and the appropriate factor of safety (Table XIII-1). In some instances, the allowable bearing capacity will be governed by the allowable settlement.

5.2.2.3 Settlement of Footings on Cohesive Soils. If the settlement is expected to occur in strata beneath the footings to a depth equal to the distance between the footings, a settlement analysis should be made assuming the footings are independent of each other. Compute settlements for the maximum bearing pressure and for lesser values. If significant settlements can occur in strata below a depth equal to the distance between footings, the settlement analysis should consider all footings to determine the settlement at selected footings. Depending on the nature of subsurface conditions, it may or may not be possible to proportion footings to equalize settlements. The possibility of proportioning footing areas can be determined only on the basis of successive settlement analyses. If the differential settlements between footings are excessive, change the layout of the footings, use a mat foundation, or use piles or drilled piers. If foundation soils are nonuniform horizontally, the settlement analysis should be made for the largest footing, assuming that it will be founded

on the most unfavorable soils disclosed by the field investigations, and for the smallest adjacent footing. The results of these settlement analyses should be presented in charts, which relate settlement, footing size, bearing pressures, and column loads. Proper footing sizes can readily be determined from such charts when the allowable settlement is known. After a footing size has been selected, compute the factor of safety with respect to bearing capacity for dead load plus maximum live load.

5.2.2.4 Settlement of Footings on Cohesionless Soils. The settlement of footings on cohesionless soils is generally small and will take place mostly during construction. Consideration should be given to the potential for saturation of the cohesionless foundation soils at some future time. Saturation of cohesionless foundation soils will cause, at that time, additional settlement that will be in excess of the initial settlement.

5.2.3 Drilled Piers.

5.2.3.1 Bearing Depth. Drilled piers must be founded on firm, relatively incompressible material. This material varies dramatically within Southwestern Division. Selection of the bearing depth should be based on the results of field investigations and lab testing and from investigation and evaluation of the performance of existing structures founded on drilled piers. Often, the shallow bearing depth of drilled piers and their exaggerated bells require bearing capacity analysis as spread footings. These shallow drilled piers are actually spread footings constructed in auger holes rather than wooden formwork. Special considerations are required to establish the bearing depth of drilled piers in areas of expansive foundation soils.

5.2.3.2 Allowable Bearing Capacity. The allowable end bearing capacity should be estimated from the strength of the foundation material at the bearing depth, and the appropriate factor of safety (Table XIII-1). The allowable shaft resistance should be estimated if the foundation material along the pier shaft will provide a continuous resistance to the pier load. If the foundation material along the pier shaft is compressible, an additional load should be expected on the pier as that foundation material consolidates. Often the pier depth is sufficiently shallow relative to the pier width that the analysis should be as for a spread footing; the bearing capacity factor, N_c, may be less than 9.

5.2.3.3 Expansive Foundation Soils. In areas of expansive foundation soils, drilled piers must bear on strata below the depth of the active zone and on firm, relatively incompressible materials that have relatively stable moisture contents. The depth of this active zone in central and north Texas and in central Oklahoma is as much as 15 feet. The depth can be estimated locally by observing the relationship of moisture content to plastic limit of the foundation soils. Conversely, the selected bearing depth can be too great in areas of expansive foundation soils, particularly in areas of deep, soft clay-shales such as the San Antonio Area and western Oklahoma. At depth, these expansive clay-shales are moisture-deficient. Drilled piers at great depths provide a conduit for moisture into the deep clay-shale and heave of the drilled piers can be expected. In San Antonio, the bearing depth of drilled piers is usually to a dense basal gravel layer immediately overlying the clay-shale. The potential uplift force due to shaft adhesion from the expansive soils in the active zone should be computed and provided for foundation design. Recommendations should also be provided on anchoring the drilled piers by socketing into underlying rock or by pier weight and supported loading. Structurally the pier shaft must have enough reinforcing steel to resist the potential tension that may come from the expansive soils in the active zone. Either the minimum shaft tension steel area required or the maximum potential heave from the expansive soils should be provided for foundation design.

5.2.3.4 Structurally Supported Floors. Buildings in areas of expansive foundation soils and on drilled piers should have supported structural slabs for interior floors. The structural slab may be a cast-in-place slab on carton forms. Grade beams between drilled piers should also be constructed on carton forms to provide voids below the grade beams. Precast planks/tees and bar joists can be used to support the floor slab. Precast planks/tees can be used with or without a crawl space, but bar joists must have a crawl space for ventilation to prevent corrosion of the steel bar joists. However, in areas of expansive foundation soils, a crawl space would be required to provide space for heave of the active zone. If appropriate, these items should be addressed in the geotechnical report (Foundation Design Analysis).

5.2.3.5 Construction Considerations. Special considerations should be provided for anticipated situations which could develop during construction: use of casing, tremie placement of concrete, inspection of pier, obstacles to underreaming, and increase in reinforcing steel to compensate for heave.

5.2.4 Pile Foundations. Bearing piles are deep foundations used to transmit foundation loads to rock or soil layers having adequate bearing capacity to support the structure and to preclude settlement resulting from consolidation of soil above these layers. When the bearing strata are below the groundwater table, and when off-shore structures are being built, piles may be the most economical type of deep foundation available because they do not require dewatering of the site. Piles also may be used to compact cohesionless soils and to serve as anchorages against lateral thrust and vertical uplift. The selection, design, and placement of pile foundations are presented in detail in EM 1110-2-2906, Design of Pile Foundations (reference 2.3.15).

5.2.5 Ribbed Mat Slabs. Ribbed mat slabs have been used extensively to provide a cost-effective foundation for a variety of structural and architectural systems. While competent structural performance has been achieved, many ribbed mat projects have experienced significant cosmetic cracking of floor slabs. This is typically due to volumetric shrinkage of slabs with large lateral dimensions and restraint created by the stiffening beams during curing of the concrete. (see the structural chapter of this AEIM for a description of design measures to control shrinkage cracking.) The selection of the foundation type should include aesthetic considerations. In general, ribbed mat slabs should not be the preferred foundation system for sites with low or non-expansive soils, or buildings with exposed concrete floors where noticeable shrinkage cracking will be objectionable. A ribbed mat slab is often the most economical foundation for sites with expansive soils. However, if the building has exposed concrete floors, a ribbed mat slab may not be appropriate because of the potential for visible cracking in the floor. Administration and barracks buildings typically have carpet or vinyl covering on the floor and the tight shrinkage cracks typically do not result in aesthetic or structural problems. In tactical maintenance shops, warehouses, fire stations, and other similar buildings, ribbed mat slabs may be an acceptable design choice, even if the slabs contain a limited amount of visible, tight cracks on the exposed concrete floors. Detailed guidance has been developed and published for the development and presentation of geotechnical parameters for design of ribbed mat slabs. That detailed guidance is presented in SWD Engineer Technical Letter dated 16 April 1987, Criteria for Developing Geotechnical Design Parameter for CESWD Ribbed Mat Design Methodology. Access to this ETL may not be universal so the ETL has been incorporated into this AEIM as Section 5.3, below.

5.3 **Geotechnical Parameters for Ribbed Mat Foundations.**

5.3.1 Soil-Structure Interaction Modes. Two heave-induced deformation conditions appropriate for ribbed mat slab structural analysis is center lift and edge lift.

5.3.1.1 Center Lift. Center lift refers to doming of the foundation in the interior area of a slab-on-grade with heave differential to the perimeter area as depicted in Figure 1. This may be caused either by drying of the expansive subgrade around the perimeter beam or by wetting of the expansive subgrade in the interior. Loss of support along perimeter and first interior transverse stiffener beams results if the magnitude of center-lift heave is large enough and the beams are sufficiently rigid to cantilever from the supported interior region.

5.3.1.2 Edge Lift. Edge lift involves more complex soil-structure interactions than does center lift. In edge lift, the structure is supported by heaving subgrade at the perimeter and in the relatively moisture-stable interior. Loss of support develops when the edge-lift deformation is large enough and the spanning beam is sufficiently rigid. Edge lift is depicted in Figure 2.

5.3.1.3 Analyses. Soil-structure interaction within the interior-supported region is reasonably represented as a beam on non-linear subgrade. Soil-structure interaction at the perimeter is more complex because the soil deflects under the structural load as a bean on non-linear subgrade, but also the swelling soil either loads and/or deflects the beam upward. To further complicate matters, the amount of edge-lift heave and the soil-beam interface pressure are interrelated and unique for each specific site. Structural analyses are particularly sensitive to edge-lift parameters (edge-lift heave magnitude and limiting beam-soil interface pressure). For example, large values for these may cause the solution to either fail to converge, or indicate that the beam must be very deep and/or very heavily reinforced. Analyses of site conditions may sometimes dictate massive, very rigid stiffener beams, which are not generally necessary. Estimates of edge-lift heave of less than 25 mm to 40 mm (1.0 to 1.5 inches) during design analysis produce reasonable and constructible beams.

5.3.2 Center Lift Parameters for Structural Design.

5.3.2.1 General. Center lift parameters to be provided in the foundation design analysis include (1) modulus of subgrade reaction (K_1), (2) design allowable bearing for beams (q_{all}), (3) magnitude of center lift (Y_{MCL}),and (4) loss of support distance around the perimeter (L_{MCL}).

5.3.2.2 Modulus of Subgrade Reaction. The modulus of subgrade reaction should be taken as K_1 = 200 pci for beams up to 12 inches wide and bearing on compacted, nonexpansive fills consisting of gravel, crushed rock, or limestone screenings, or on cement-stabilized materials if these materials extend significantly ($D \geq 3B$) below the stiffener beam of width B. The foundation design analysis should direct that K_1 values be factored to account for width effects such that $K_{DESIGN} = K_1/B$, where B is the effective beam width in feet for soil-structure interaction. Note that the resultant effective beam width may include a significant width of the slab and is therefore significantly greater than actual beam width. Structural design calculations are not sensitive to variations in K values.

5.3.2.3 Design Allowable Bearing. A design allowable bearing value (q_{all}) has historically been assigned for sizing of stiffener beams, perimeter beams, and enlarged beam intersections beneath columns. Bearing values typically consider the beam to be a continuous strip footing or the beam intersection to be a spot footing and carrying either line or concentrated loads, respectively. The allowable bearing value is typically developed based on the average strength of engineered fill at shallow depth with a factor of safety of not less than 3.0. Design loads typically include full dead load plus one-half live load. The purpose in sizing the beams and beam intersections for this design allowable is to provide uniform contact pressures at the beam-soil interface therefore limiting differential settlement. The assumptions of minimal load sharing between the slab and beams, ample safety factor on the fill strength, and minimum beam widths specified in Chapter IV (Structural) of this AEIM combine to limit the mobilized soil strains to low levels. This leads to very small structurally induced deflections given uniform, nominal fill depths. Actual values assigned for design bearing capacities have seldom exceeded q_{all} = 95 kPa (2.0 KSF) although values as high as 145 kPa (3.0 KSF) have been assigned in limited cases where required and justifiable. Seldom are there structural requirements for larger allowable bearing values since specified minimum beam widths generally govern.

5.3.2.4 Magnitude of Center Lift. The magnitude of center lift heave potential (Y_{MCL}) given in the foundation design analysis should be the residual heave potential at the site. The value of Y_{MCL} should include effects due to subgrade removal and replacement, any effects due to fill above original subgrade, and the weight of the proposed structure. Maximum design value for center-lift potential should not exceed 40 mm (1.5 inches). Where attainable with reasonable removal/replacement depths $\leq$ 1 meter (36 inches), Y_{MCL} should be limited to not more than 25 mm (1.0 inch), which is well within the "tolerable" deformation range of most structures. The minimum remove/replace depth should be taken to the bottom elevation of the ribbed mat slab beams. The heave potential is determined by three soil parameters: the coefficient of swell (C_s), depth of active zone (X_a), and expansion pressure (P_{exp}).

5.3.2.4.1 Coefficient of Swell. Caution should be used in selecting coefficient of swell (C_s) values for heave analyses since swell pressure test results significantly underestimate (C_s) values compared to controlled expansion-consolidation-rebound tests. Additionally, both test methods tend to give low (C_s) values since most rebound time curves are terminated well before primary swell is completed.

5.3.2.4.2 Depth of Active Zone. An appropriate design value of the depth of the active zone (X_a) typically lies between the present depth to the stable relative moisture content (estimated by observing the relationship of moisture content to the plastic limit) and the maximum depth observed, such as the maximum depth of weathering. Typical (X_a) values for the central and north Texas regions and for the central Oklahoma region appear to vary from about 3 to 4.5 meters (10 to 15 feet). These values have been estimated for regression heave analyses for distressed structures and for depth of moisture variation versus approximate return/duration interval studies. Values smaller than 4.25 meters (14 feet) may be applicable in specific cases such as where the active zone is the distance between the structural foundation element or slab on grade and a perched water table, a condition common in these regions. Center lift analyses should consider "saturated" conditions to a depth of X_a. If a nominal remove/replace depth and saturated subgrade assumptions indicate unreasonable residual heave potential, consider increasing the depth of remove/replace and/or recommending a more defensive design to prevent saturation of the subgrade.

5.3.2.4.3 Expansion Pressure. Expansion pressures should be developed versus depth using small depth intervals. These should be developed from laboratory data for the site. Additionally, these data may be supplemented using proper correlations with nearby, and preferably adjacent, sites.

5.3.2.5 Edge Moisture Variation Distance. The edge moisture variation distance (L_{MCL}) may control the design of the interior stiffener beams that are adjacent to the perimeter. The maximum moments and shear are induced in the transverse beams when these elements cantilever free of foundation support from the interior supported region to the outside of the perimeter beam. The length of cantilever is largely controlled by the value of L_{MCL}. This concept was adopted from Post-Tensioning Institute (PTI) guidelines, originally developed for lightly loaded flexible mats. Standard practice in the San Antonio area has been to assign upper or near upper bound values from the Thornthwaite Moisture Index (TMI) for design limit L_{MCL} values. The Thornthwaite Moisture Index for Southwestern Division is presented on Figure 3. The Thornthwaite Moisture Index (TMI) versus Edge Moisture Variation Distance (L_{MCL}) is presented as Figure 4. The actual edge moisture variation distance is moderated by relatively deep perimeter beams which act as physical barriers and by the non-expansive fill which tends to make changes in moisture content (and therefore any resultant heave or shrinkage) more uniform and provide a surcharge effect as well. The very short return interval of edge moisture variation events presented in TMI, and reported by some sources to range from 1 to 2 years, may not provide an adequate estimate of the return interval for project design. The typical project design life exceeds 20 to 30 years, and may well exceed 50 years. Estimated edge moisture variation values considering a 100 percent probability of experiencing a 20 to 30-year return interval event may well be twice typical TMI values. Based on a subjective combination of all factors, it is suggested that L_{MCL} be taken as the edge moisture variation distance determined using Figures 3 and 4. These values should be modified, either up or down, based on site specific geotechnical investigations and engineering judgment.

5.3.3 Edge Lift Parameters for Structural Design.

5.3.3.1 General. Edge lift parameters to be provided in the foundation design analysis include (1) modulus of subgrade reaction (K_1), (2) magnitude of edge lift heave (Y_{MEL}), (3) limiting soil-beam interface pressure (P_{sw}) for that portion of

the beam being acted on by the heaving subgrade, and (4) a value for edge moisture variation distance (L_{MEL}).

5.3.3.2 Modulus of Subgrade Reaction. Values of modulus of subgrade reaction given for center lift are considered appropriate for edge lift.

5.3.3.3 Soil-Beam Interface Pressure and Magnitude of Edge Lift. The limiting soil-beam interface pressure (P_{sw}) and magnitude of edge lift potential (Y_{MEL}) are related, and the analysis for solution determines both simultaneously. As edge lift develops and loss of support occurs between the perimeter and interior regions, the heaving soil may well exert a pressure on the stiffener beams well in excess of typical design interface pressures (q_{all}). As the soil column swells and lifts the overlying beam, the soil-beam contact area increases toward the interior region to accommodate the greater structural reaction. The soil-structure interaction in the edge lift region can be visualized as a three-component system: (1) a structural element (a beam or mat strip), (2) an element of nonexpansive fill beneath the structural element plus that piece of the expansive subgrade restrained against heave by the weight of the overlying fill, and (3) the heaving column of soil to a depth of X_a beneath the bottom of the nonexpansive fill blanket (Figure 5). The load-deformation relationship of element 1 interacting with element 2 can be represented by a P-Y curve as shown in Figure 6. The load-deformation relationship of element 3 interacts with elements 1 and 2 in the column immediately below the beam as shown on Figure 7. The plot consists of the net heave potential of the swelling soil column versus those forces resisting the tendency to swell, taken at the base of the structural beam. These relationships can be added algebraically to produce a composite p-y curve that can be easily utilized by available soil-structure interaction programs for structural analysis. Since such analysis is within the purview of the structural engineer, the geotechnical engineer need only furnish the pressure heave relationship in useable form in the foundation design analysis. This information should be provided in a tabulated format giving coordinates for at least three points. These minimum three points should be the P_{sw} and Y_{MEL} coordinates for (1) pressure equal to P_{ult}, (2) pressure equal to P_{all}, and (3) pressure equal to zero.

5.3.3.4 Edge Moisture Variation Distance. Edge moisture variation distance (L_{MEL}) for edge lift analysis may be taken from the TMI chart given in Figure 8. The TMI values represent approximate environmentally induced events. As a result, upper

bound values should be selected for design. It is recommended, however, that average values be used for all SWD projects. Additionally, recommendations should be made in the foundation design analysis to limit the potential for developing "hot spots" due to long term sources of free water around the building perimeter.

5.3.3.5 Excepted Structures. The analysis of certain structure-site situations may warrant deleting edge-lift analyses:

* Pre-engineered metal building without interior masonry walls or heavy interior dead or permanent live loads.
* Structures in which defensive design efforts have been incorporated and reasonable confidence exists that these will be constructed and maintained as intended.
* Structures in which minor architectural distress (such as cracking of masonry walls, plaster walls, tiled surfaces) is not likely to cause undue user concern or raise maintenance requirements significantly.

5.3.3.6 Structural Design of Ribbed Mat Slabs. Guidance on use of Geotechnical parameters for structural design of the ribbed mat slab is in Chapter IV, Structural.

6. PAVEMENT DESIGN ANALYSIS

6.1 Airfields and Heliports.

Military transportation systems designs for all airfields, railroads, ports, and special vehicle guideways and roadways will be performed through the Transportation Systems Mandatory Center of Expertise. Design criteria and special instructions will be provided by TSMCX

6.2 Roads, Streets, and Open Storage Areas.

6.2.1 Design. The design of roads, streets, and open storage areas will be in accordance with the applicable technical manuals or special instructions. New concepts and materials, such as roller-compacted concrete, paving blocks, and asphalt additives, are encouraged when the benefits have been documented and cost reductions can be shown. New concepts and materials should be applied only after a thorough review and approval by HQUSACE (CEMP-E). Roads and streets must be approached as individual problems. The pavement design will be based on the maximum loads and traffic anticipated for each individual

segment or general use, or both, in the road and street system. In addition to pneumatic-tired vehicles, some roads and streets will be required to sustain traffic of half- or full-track vehicles having variable weights. Flexible pavements for roads and streets for tracked vehicles will be based on current criteria for high-pressure tires. The design of rigid pavements will require particular attention to joint types and spacing, and reinforcement due to a variety of conditions.

6.2.2 Computer Aided Design. Software for computer aided design has been developed by Waterways Experiment Station. The software is based on the guidance given in TM 5-822-5, Pavement Design for Roads, Streets, Walks, and Other Open Storage Areas (reference 2.1.16).

6.2.3 Type of Pavement. The type of pavement to be considered for vehicular traffic will be determined by the intended use and by the initial and maintenance costs. Rigid pavements are required in certain critical areas including: (1) aprons adjacent to maintenance shops; (2) fueling aprons; (3) maintenance areas; (4) open storage areas using heavy duty loaders; (5) tracked vehicle parking and turning areas; and (6) wash racks.

6.2.4 Curbs and Gutters. Curbs and gutters, when required, will be of Portland cement concrete.

6.3 **Parking Areas**.

6.3.1 Nonorganizational Vehicles. Pavement design will be based on the maximum loads anticipated for each area, but in no case will pavements be designed for less than a 1,814.4-kg (4,000-pound) wheel load and 275 kPa (40 psi) tire pressure, or Design Index 1 from TM 5-822-5 (reference 2.1.15).

6.3.2 Organizational Vehicles. Parking lots for organizational vehicles must be approached as individual design problems. Parking for cars and light trucks should be similar to nonorganizational parking. Heavy trucks, specialized vehicles, and tanks will require special designs. All organizational vehicle parking will be rigid pavement. If identified in the project DD Form 1391 by using service, paved areas for organizational vehicles will be designed for the heaviest vehicle at the installation.

6.4 **Soil Stabilization**.

Stabilization of subgrade soils may be required to provide an adequate pavement structure. Guidance for soil stabilization is provided in TM 5-822-14, Soil Stabilization for Pavements (reference 2.1.13).

6.5 **Review by TSMCX**.

Unless specifically requested, military transportation systems designs for roads, streets, organizational vehicle parking, and all facilities directly in support of transportation vehicles will not be reviewed by the TSMCX.

7. **REPORT OF SUBSURFACE AND DESIGN INVESTIGATIONS**.

Within the Corps of Engineers, the geotechnical report for structural foundations is referred to as the Foundation Design Analysis and the geotechnical report for paving is referred to as the Pavement Design Analysis. Either report should contain sufficient descriptions of field and laboratory investigation, subsurface conditions, typical test data, basic assumptions, and analytical procedures to permit detailed review of the conclusions, recommendations, and final design. The amount and type of information to be presented shall be consistent with the scope of the investigation. For some structures, a cursory review of foundation conditions may be adequate. For major structures, the following outline should be used as a guide:

7.1 A general description of the proposed project should be presented including purpose, size of structure(s), and any special requirements. The traffic loading should be presented for paving projects.

7.2 A general description of the site, indicating areal extent, principal topographic features, ground cover, and presence of existing structures should be presented. A plan view that shows the surface contours, the location of the proposed project, and the location of all borings should be included.

7.3 The regional geology and the site geology should be described in general terms to provide a background for the geotechnical data obtained during field investigations.

7.4 The results of field investigations should be presented, including graphic logs of all foundation and borrow borings, locations of and pertinent data from piezometers, if any, and a

general description of subsurface materials, based on the borings. Groundwater conditions should be included, with information on seasonal variations in groundwater level and results of field pumping tests, if performed.

7.5 A general description of the laboratory tests that were performed should be presented with a range of test values and detailed test data on representative samples. Atterberg limits should be plotted on a plasticity chart and typical grain-size curves should be plotted on a grain-size distribution chart. Laboratory test data should be summarized in tables and figures as appropriate. If laboratory tests were not performed, the basis for determining soil or rock properties should be presented, such as correlations or reference to pertinent publications.

7.6 A generalized geologic profile should be presented, showing properties of subsurface materials and design values of shear strength for each critical stratum. Geologic profiles and sections for inclusion in design documents and in plans and specifications should be prepared in the specified Computer-Aided Design and Drafting (CADD) System. Forms, symbols, and other graphic aids are contained within the geotechnical cell library of the A/E/C CADD Standards.

7.7 A discussion of the foundation considered, or alternative foundations considered, should be presented. Foundations for existing structures in the project vicinity and the performance of those existing foundations should also be discussed. Selection of type of foundation must be coordinated with the design structural engineers.

7.8 A table or sketch should be provided that shows the final size and depth of footings or mats, or final size and lengths of piles or drilled piers, if used. Pertinent geotechnical data should be presented for design.

7.9 Basic assumptions for loadings, basis for selecting design strengths, and the computed factors of safety for bearing-capacity calculations should be presented. Basic assumptions, loadings, and results of settlement analyses should also be presented. The estimated heave of subgrade soils, if appropriate, should be presented. The effects of computed differential settlements, and also the effects of swell, on the structure should be discussed. Basic assumptions and the results of other analyses, as pertinent, should also be provided.

7.10 For paving projects, the assumed traffic loading should be presented and the development of the recommended pavement discussed. A discussion of existing pavement in the project vicinity and the performance of that pavement should also be discussed.

7.11 The groundwater conditions at the site should be discussed along with the potential impact on construction. An estimate of dewatering requirements should be provided, if necessary

7.12 Special precautions relative to construction of the foundations should be presented. Possible sources for fill and backfill, if required, should also be given. Compaction requirements should be described.

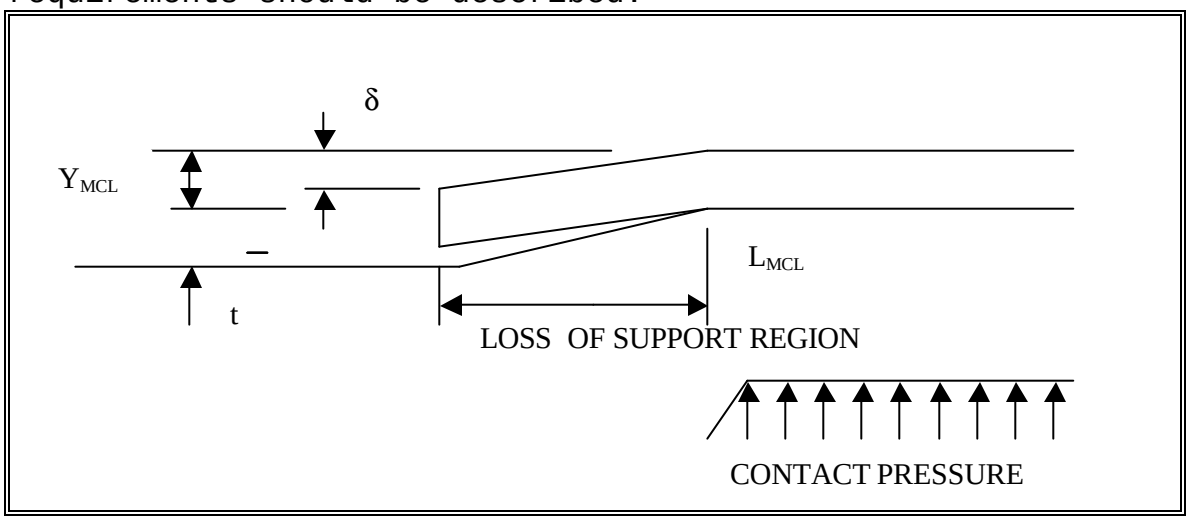

FIGURE 1. CENTER LIFT

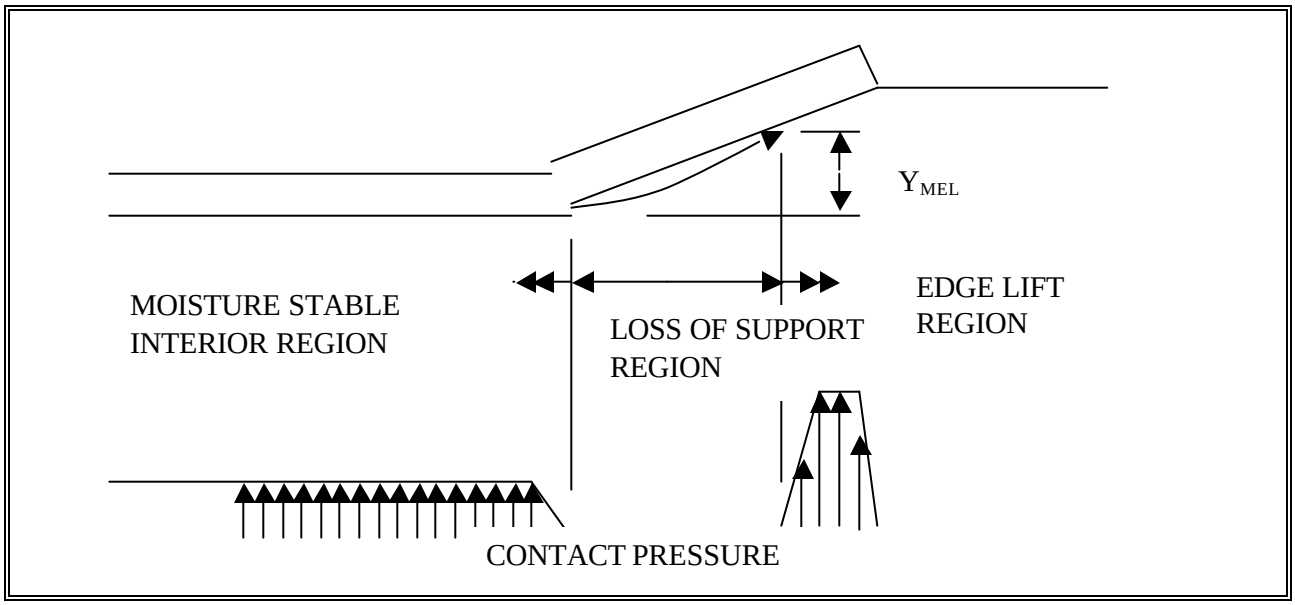

FIGURE 2. EDGE LIFT.

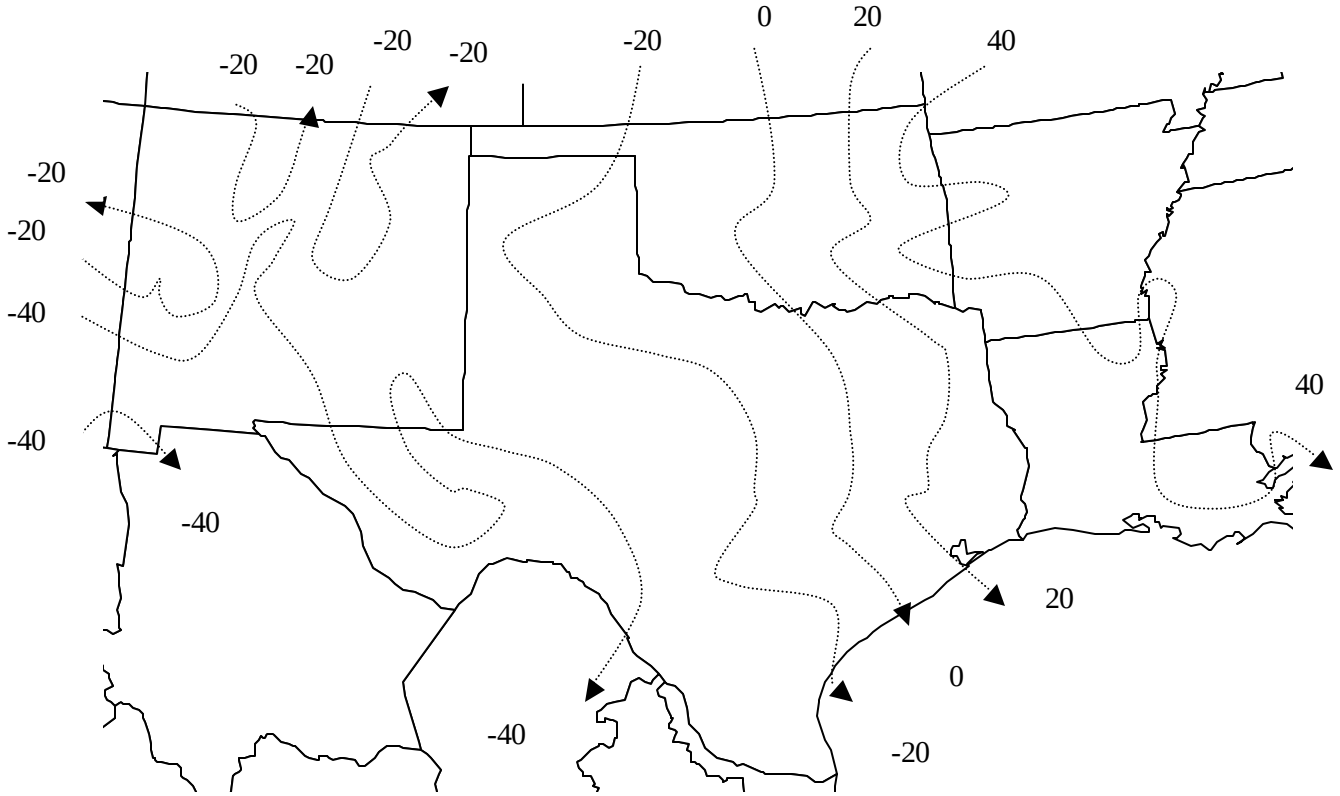

LOCATION	TMI	LOCATION	TMI	LOCATION	TMI	LOCATION	TMI
ARKANSAS:		**NEW MEXICO:**		**TEXAS**:		**TEXAS**	
Blytheville AFB	43	Fort Wingate	-26	Abilene	-24	Karnack	23
Little Rock AFB	42	Gallup	-26	Austin	- 3	Killeen	-2
Pine Bluff	42	Holloman AFB	-41	Bergstrom AFB	- 3	Laughlin AFB	-35
		Kirtland AFB	-19	Big Spring	-33	Lonestar AAP	28
LOUISIANA:		Las Cruces	-43	Carswell AFB	- 3	Longhorn AAP	24
Fort Polk	32	Santa Fe	-16	Corpus Christi	-22	Lubbock	-22
Leesville	31	White Sands MR	-43	Dallas	2	Red River AD	28
New Orleans	40			Del Rio	-35	Reese AFB	-23
Louisiana AAP	31	**OKLAHOMA**		Dyess AFB	-25	San Antonio	-21
Shreveport	30	Altus AFB	- 7	Ellington AFB	16	San Angelo	-32
		McAlester AFB	17	El Paso	-44	Sheppard AFB	-10
NEW MEXICO:		Oklahoma City	- 1	Fort Bliss	-44	Texarkana	29
Alburquerque	-19	Tinker AFB	- 1	Fort Hood	- 3	Wichita Falls	-10
Alamogordo	-40			Fort Worth	- 2		
Cannon AFB	-26			Goodfellow AFB	-32		
Clovis	-26			Houston	16		

FIGURE 3. Thornwaite Moisture Indices for Southwestern Division. From Thornwaite, C.W., "An Approach Toward a Rational Classification of Climate," Geographical Review, Vol. 38, No. 1, 1948, pp. 55-94.

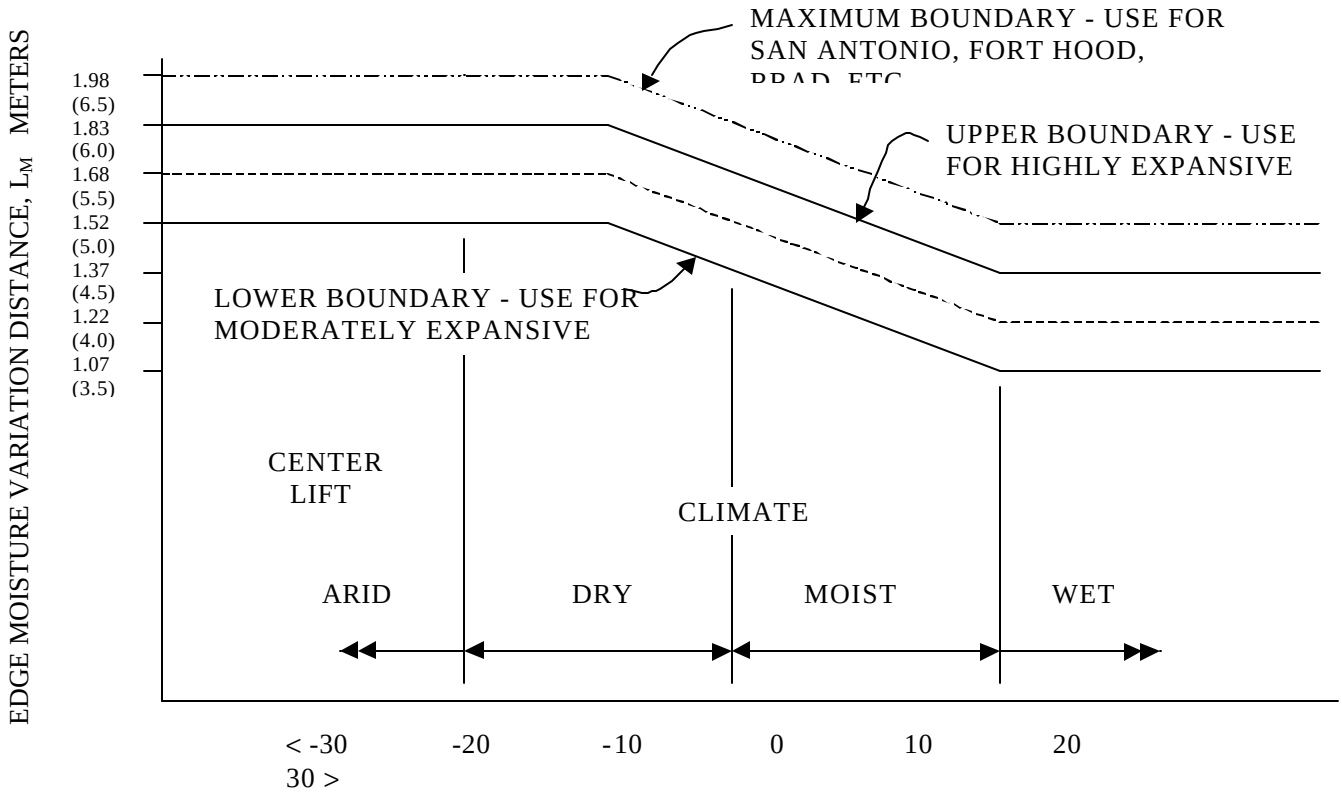

FIGURE 4. Approximate Relationship Between Thornthwaite Index and Moisture Variation Distance

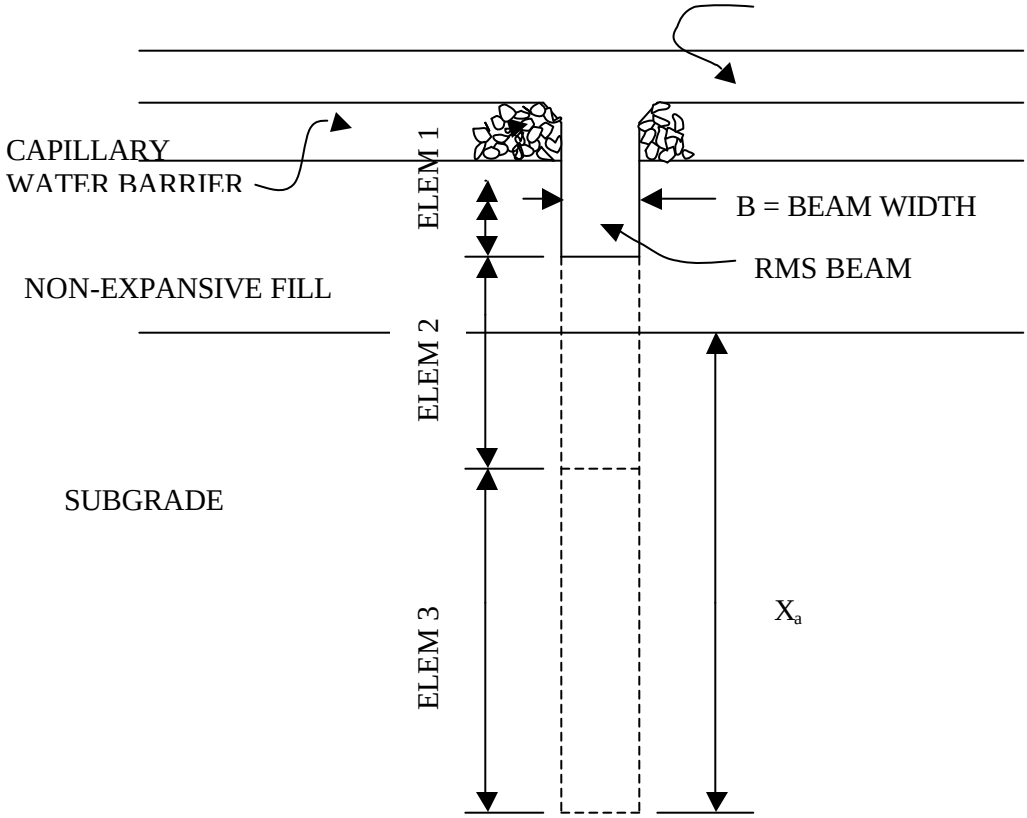
CAPILLARY
WATER BARRIER
ELEM 1
B = BEAM WIDTH
RMS BEAM
NON-EXPANSIVE FILL
ELEM 2
SUBGRADE
ELEM 3
X_a

FIGURE 5.

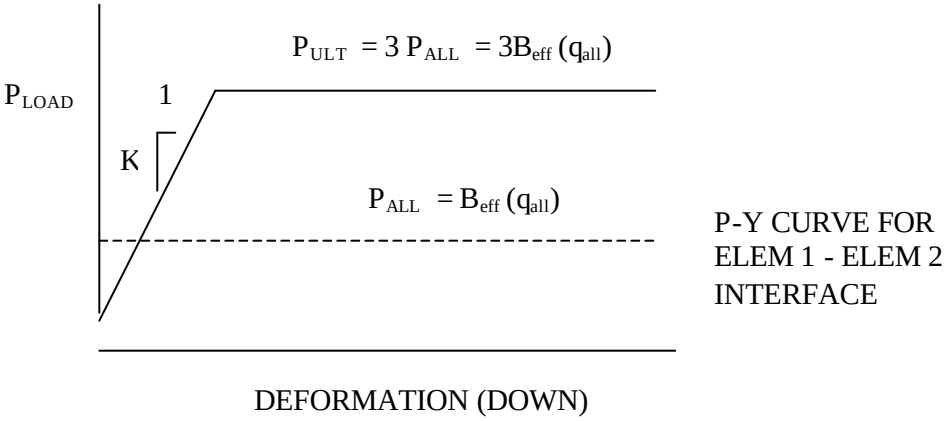

FIGURE 6.

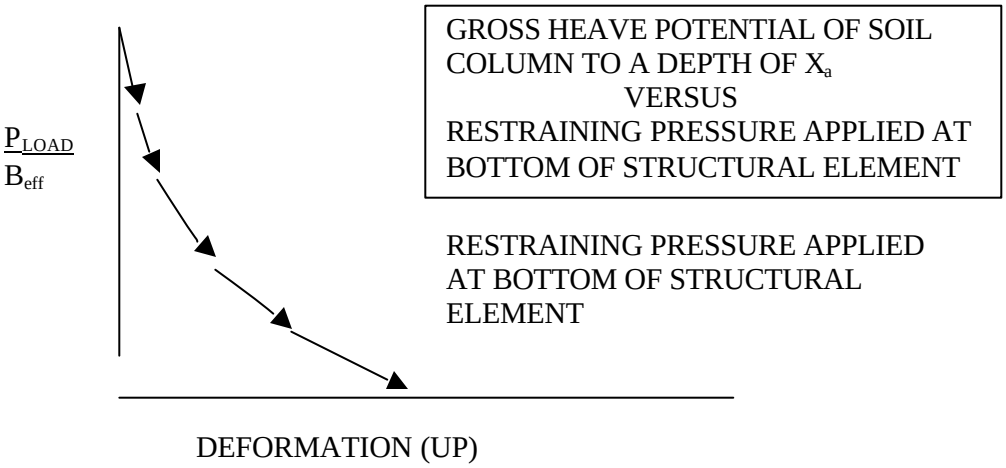

FIGURE 7.

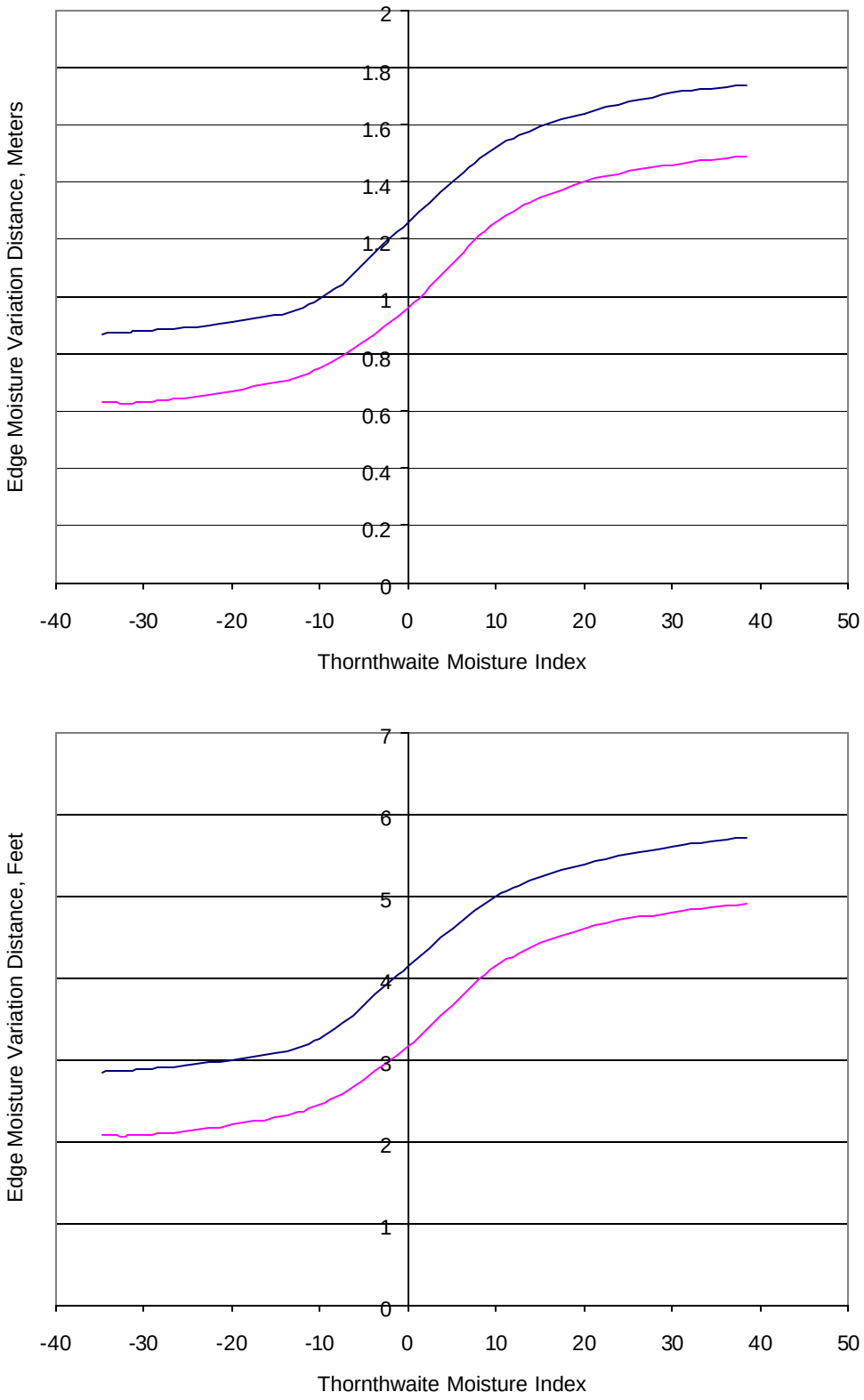

Figure 8. Approximate relationship between the Thornwaite Moisture Index (TMI) and the edge lift distance.

APPENDIX A

CHAPTER XIII
GEOTECHNICAL DESIGN/REVIEW CHECKLIST

PROJECT: _____

PROJECT LOCATION: _____

PROJECT GEOTECHNICAL ENGINEER: _____

___ All geotechnical explorations, lab testing, evaluation, and engineering have been completed.

___ Objectives of geotechnical explorations and scope of work were met.

___ Geotechnical explorations were adequate.

___ Boring logs and subsurface profiles were completed and included as appropriate. Plates prepared as requested.

___ Laboratory tests were appropriate and adequate.

___ Laboratory test data were included on logs or profiles as appropriate.

___ Groundwater information has been presented.

___ Classification of soil and/or rock accurate based on boring and laboratory data.

___ Engineering properties of soil and rock were adequately defined. (Density, compaction characteristics, permeability, consolidation characteristics, shear strengths, elastic properties, shrink-swell characteristics, earth pressure coefficients)

___ Engineering analyses, as pertinent, were performed: settlement, bearing capacity, slope stability, seepage, swell pressures.

___ Selections of structural foundations, if pertinent, were made and foundation recommendations were prepared: shallow footings and/or mat foundations, drilled piers, pile foundations.

GEOTECHNICAL DESIGN/REVIEW CHECKLIST

PROJECT: _____

___ Paving analyses: vehicle and traffic considerations, subgrade preparation/stabilization, base course, pavement design.

___ Consideration was made for site improvement through soil stabilization.

___ Evaluations were performed, if pertinent, for equipment vibrations and seismic activity.

___ Surface drainage, landscape plantings, and sprinkler systems in consideration of foundations on expansive soils.

___ Specifications (site preparation): care of water, dewatering, unwatering, site drainage, clearing, grubbing, site preparation.

___ Specifications (earthworks): earthfill/fill placement, backfill for structures, excavation, backfill for utilities.

___ Specifications (structural foundations): drilled piers, piles.

___ Paving specifications: subgrade preparation/ stabilization, soil cement, base course, bituminous pavement, Portland cement concrete pavement.

___ Quantities prepared for Cost Estimating.

___ Technical coordination with others: Civil Design, Hydraulics, Hydrology, Structural.

___ Funding is adequate for the scope of work with adherence to budget through each phase of geotechnical input to the project.