Appendix D

Stormwater Pollution Prevention Plan (SWPPP) for the FRM Component

This page intentionally left blank.

LEGEND

FRM PLAN LEVEE RAISE 277K CFS

FRM LEVEE RAISE BORROW PIT AREA

AT&SF BRIDGE REMOVAL IMPACT AREA

LEVEE SLOPE FLATTENING AREA

LEVEE SLOPE FLATTENING AREA
(NOT NEEDED WITH TRINITY PARKWAY)

LEVEE SLOPE FLATTENING BORROW PIT

SILT FENCE W/ CHECK DAMS
PERPENDICULAR EVERY 200 FEET

NOTE: SEE SHEETS H-301 TO H-304
FOR RECOMMENDED SWPPP DETAILS

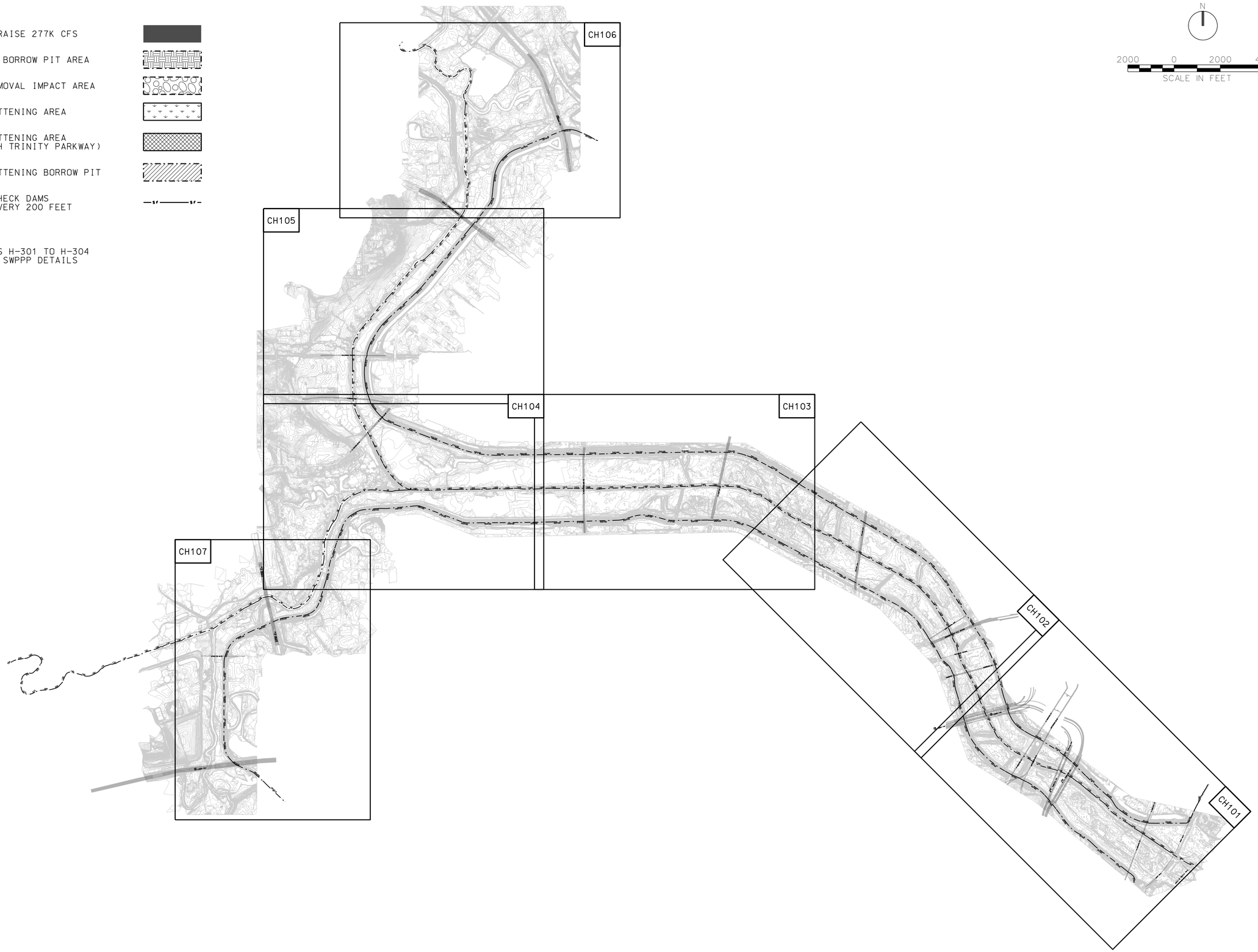

US Army Corps of Engineers
Fort Worth District

Symbol	Description	Tracking No.	Action	Date

Designed by: D. BOWERSOCK
Dwn by: D. DANG
Reviewed by: D. BOWERSOCK
Submitted by: DAVID G. BROWN, P.E. CHIEF, CIVIL SECTION
Date: 04 FEB 2014
Sol No.
Contr No.
File name:
Plot date: 2/4/2014
Plot scale:
Rev.

U.S. ARMY ENGINEER DISTRICT,
CORPS OF ENGINEERS
FORT WORTH, TEXAS

ENGINEERING/
CONSTRUCTION DIVISION
DESIGN BRANCH

DALLAS FLOODWAY LEVEES
FEASIBILITY STUDY
DALLAS, TEXAS

OVERALL STORMWATER PREVENTION
POLLUTION PLAN

Sheet reference number:
CH100

DESIGN FILE: DF-LEVEE_STUDY-CH100.dgn

Contr No.

NOT FOR CONSTRUCTION; SCALED FOR FULL-SIZE PRINTS (34x22)

DF-LEVEE_STUDY-CH100.dgn 2/4/2014 5:21:03 PM

REFERENCE FILES:
P:\Trinity_Rvr_Bsn\Dallas_Fldwy\Civil_Engineering\COMPREHENSIVE_ANALYSIS\DF-FRM_SLOPE-FLATTEN_OUTLINE-spmdl.dgn
P:\Trinity_Rvr_Bsn\Dallas_Fldwy\Civil_Engineering\COMPREHENSIVE_ANALYSIS_CAD Sheets\DF-G-bs.dgn
P:\Trinity_Rvr_Bsn\Dallas_Fldwy\Civil_Engineering\COMPREHENSIVE_ANALYSIS\DF-OVERALL-V-spmdl.dgn
P:\Trinity_Rvr_Bsn\Dallas_Fldwy\Civil_Engineering\COMPREHENSIVE_ANALYSIS\DF-ALIGNMENTS-400SCALE.dgn
P:\Trinity_Rvr_Bsn\Dallas_Fldwy\Civil_Engineering\COMPREHENSIVE_ANALYSIS_CAD Sheets\DF-C-spmdl.dgn

LEGEND

FRM PLAN LEVEE RAISE 277K CFS

FRM LEVEE RAISE BORROW PIT AREA

AT&SF BRIDGE REMOVAL IMPACT AREA

LEVEE SLOPE FLATTENING AREA

LEVEE SLOPE FLATTENING AREA (NOT NEEDED WITH TRINITY PARKWAY)

LEVEE SLOPE FLATTENING BORROW PIT

SILT FENCE W/ CHECK DAMS PERPENDICULAR EVERY 200 FEET

NOTE: SEE SHEETS H-301 TO H-304 FOR RECOMMENDED SWPPP DETAILS

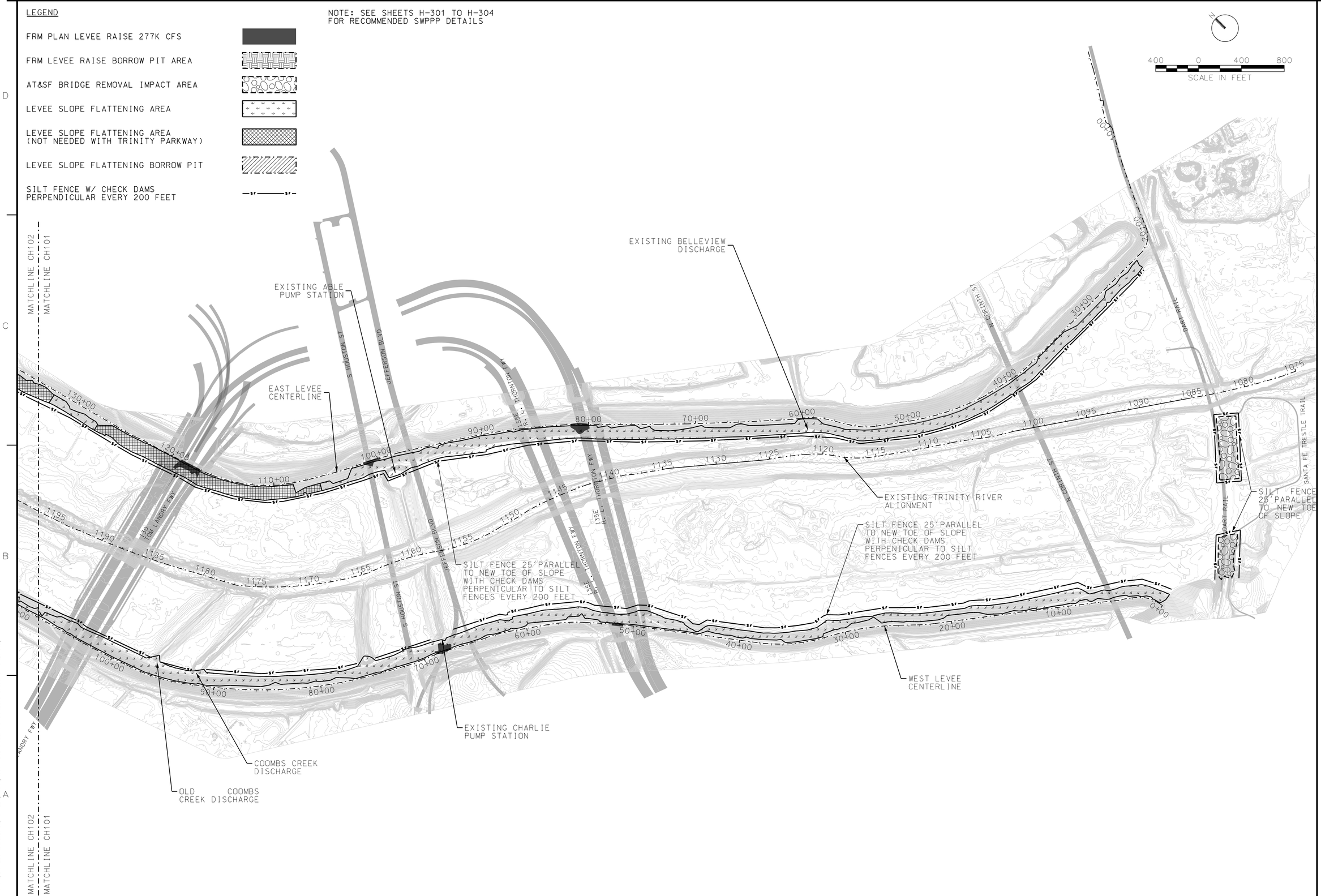

US Army Corps of Engineers
Fort Worth District

Symbol	Description	Tracking No.	Action	Date

U.S. ARMY ENGINEER DISTRICT, CORPS OF ENGINEERS FORT WORTH, TEXAS

ENGINEERING/ CONSTRUCTION DIVISION DESIGN BRANCH

Designed by: D. BOWERSOCK
Dwn by: D. DANG
Reviewed by: D. BOWERSOCK
Submitted by: DAVID G. BROWN, P.E. CHIEF, CIVIL SECTION

Date: 04 FEB 2014
Rev.
Sol No.
Contr No.
File name:
Plot date: 2/4/2014
Plot scale:

DALLAS FLOODWAY LEVEES FEASIBILITY STUDY DALLAS, TEXAS

STORMWATER PREVENTION POLLUTION PLAN I (SHEET 1 OF 7)

Sheet reference number: CH101

Contr No.

DESIGN FILE: DF-LEVEE_STUDY-CH101.dgn

DF-LEVEE_STUDY-CH101.dgn 2/4/2014 5:21:29 PM

REFERENCE FILES:
P:\Trinity_Rvr_Bsn\Dallas_Fldwy\Civil_Engineering\COMPREHENSIVE_ANALYSIS\DF-FRM_SLOPE-FLATTEN_OUTLINE-spmdl.dgn
P:\Trinity_Rvr_Bsn\Dallas_Fldwy\Civil_Engineering\COMPREHENSIVE_ANALYSIS_CAD Sheets\DF-C-bs.dgn
P:\Trinity_Rvr_Bsn\Dallas_Fldwy\Civil_Engineering\COMPREHENSIVE_ANALYSIS\DF-FRM-SWPPP-spmdl.dgn
P:\Trinity_Rvr_Bsn\Dallas_Fldwy\Civil_Engineering\COMPREHENSIVE_ANALYSIS_CAD Sheets\DF-C-spmdl.dgn

NOT FOR CONSTRUCTION; SCALED FOR FULL-SIZE PRINTS (34x22)

LEGEND

FRM PLAN LEVEE RAISE 277K CFS

FRM LEVEE RAISE BORROW PIT AREA

AT&SF BRIDGE REMOVAL IMPACT AREA

LEVEE SLOPE FLATTENING AREA

LEVEE SLOPE FLATTENING AREA (NOT NEEDED WITH TRINITY PARKWAY)

LEVEE SLOPE FLATTENING BORROW PIT

SILT FENCE W/ CHECK DAMS PERPENDICULAR EVERY 200 FEET

NOTE: SEE SHEETS H-301 TO H-304 FOR RECOMMENDED SWPPP DETAILS

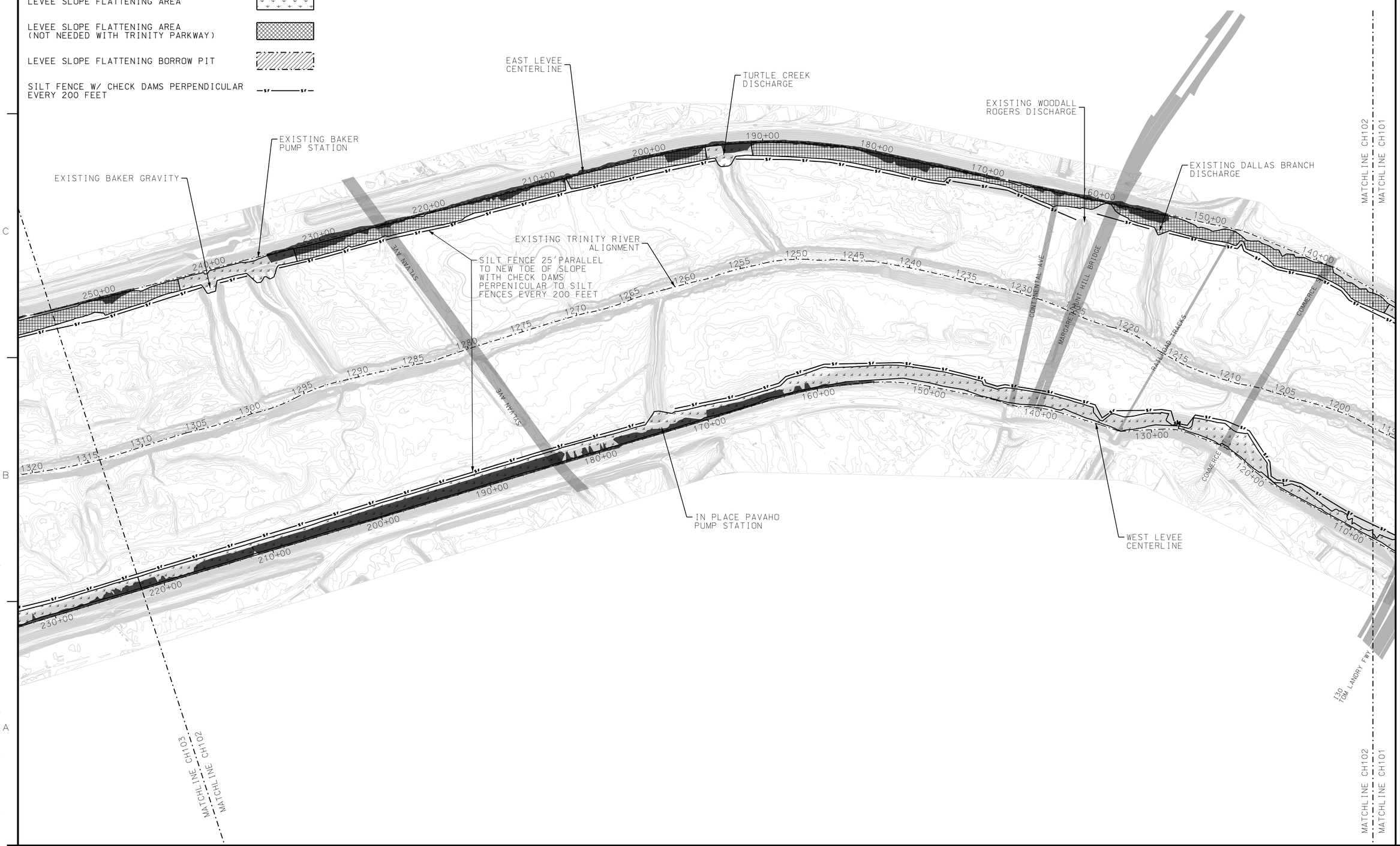

US Army Corps of Engineers
Fort Worth District

Symbol	Description	Tracking No.	Action	Date

Designed by: D. BOWERSOCK	Date: 04 FEB 2014	Rev.
Dwn by: D. DANG	Sol No.	
Reviewed by: D. BOWERSOCK	Contr No.	
Submitted by: DAVID C. BROWN, P.E. CHIEF, CIVIL SECTION	File name: Plot date: 2/4/2014 Plot scale:	

U.S. ARMY ENGINEER DISTRICT, CORPS OF ENGINEERS FORT WORTH, TEXAS

ENGINEERING/ CONSTRUCTION DIVISION DESIGN BRANCH

DALLAS FLOODWAY LEVEES FEASIBILITY STUDY DALLAS, TEXAS

STORMWATER PREVENTION POLLUTION PLAN II (SHEET 2 OF 7)

Sheet reference number: CH102

Contr No.

DESIGN FILE: DF-LEVEE_STUDY-CH102.dgn

DF-LEVEE_STUDY-CH102.dgn 2/4/2014 5:21:37 PM

REFERENCE FILES:
P:\Trinity_Rvr_Bsn\Dallas_Fldwy\Civil_Engineering\COMPREHENSIVE_ANALYSIS\DF-FRM_SLOPE-FLATTEN_OUTLINE-spmdl.dgn
P:\Trinity_Rvr_Bsn\Dallas_Fldwy\Civil_Engineering\COMPREHENSIVE_ANALYSIS_CAD Sheets\DF-G-bs.dgn
P:\Trinity_Rvr_Bsn\Dallas_Fldwy\Civil_Engineering\COMPREHENSIVE_ANALYSIS_CAD Sheets\DF-FRM_SWPPP-spmdl.dgn
P:\Trinity_Rvr_Bsn\Dallas_Fldwy\Civil_Engineering\COMPREHENSIVE_ANALYSIS\DF-FRM_SWPPP-spmdl.dgn
P:\Trinity_Rvr_Bsn\Dallas_Fldwy\Civil_Engineering\COMPREHENSIVE_ANALYSIS_CAD Sheets\DF-C-kpmdl.dgn
P:\Trinity_Rvr_Bsn\Dallas_Fldwy\Civil_Engineering\COMPREHENSIVE_ANALYSIS_CAD Sheets\DF-C-kpmdl.dgn

NOT FOR CONSTRUCTION; SCALED FOR FULL-SIZE PRINTS (34x22)

LEGEND

FRM PLAN LEVEE RAISE 277K CFS

FRM LEVEE RAISE BORROW PIT AREA

AT&SF BRIDGE REMOVAL IMPACT AREA

LEVEE SLOPE FLATTENING AREA

LEVEE SLOPE FLATTENING AREA (NOT NEEDED WITH TRINITY PARKWAY)

LEVEE SLOPE FLATTENING BORROW PIT

SILT FENCE W/ CHECK DAMS PERPENDICULAR EVERY 200 FEET

NOTE: SEE SHEETS H-301 TO H-304 FOR RECOMMENDED SWPPP DETAILS

N

400 0 400 800

SCALE IN FEET

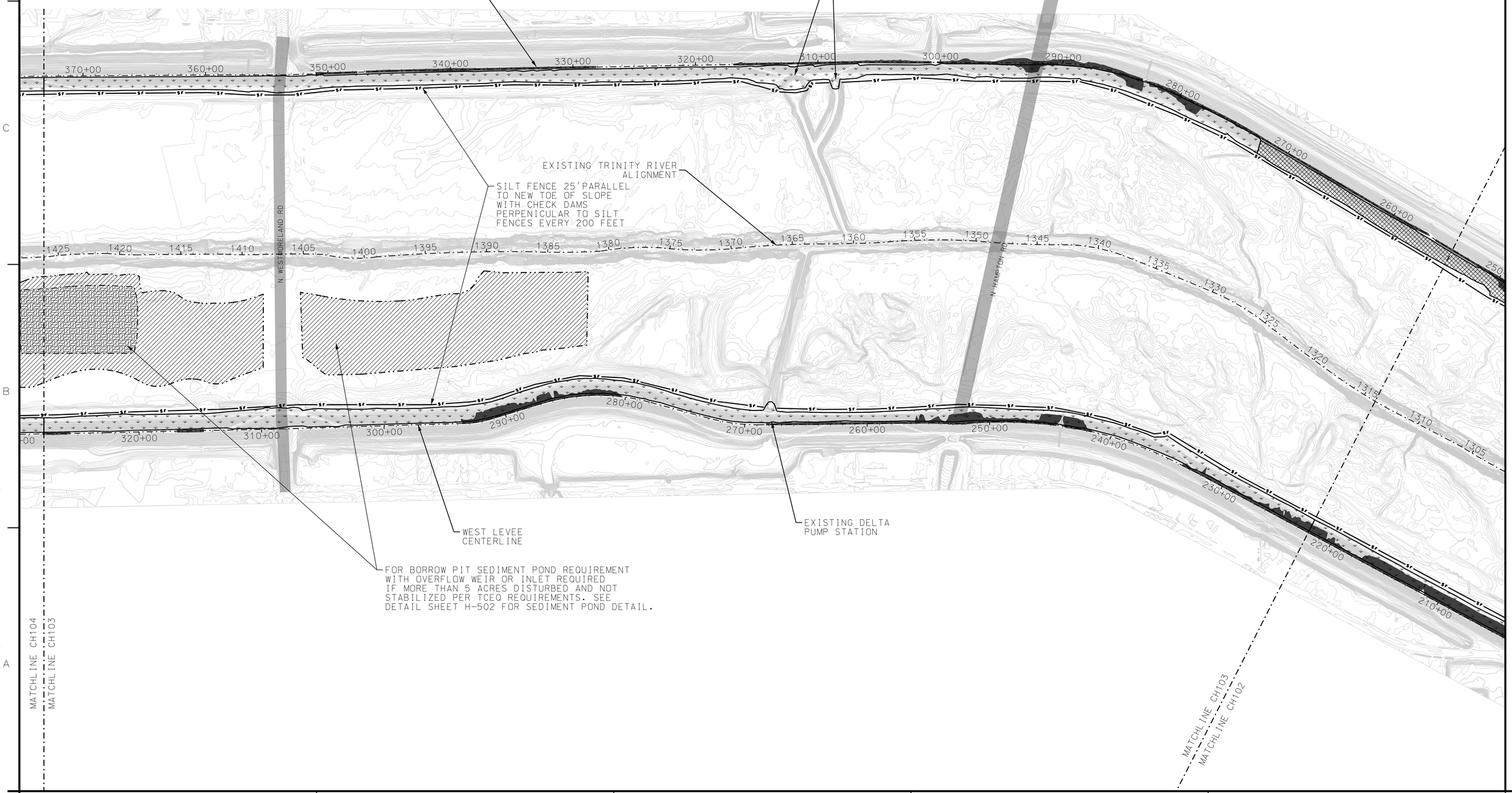

US Army Corps of Engineers
Fort Worth District

Symbol	Description	Tracking No.	Action	Date

Date: 04 FEB 2014 | Rev.
Sol No. | Contr No.
Designed by: D. BOWERSOCK
Dwn by: D. DANG
Reviewed by: D. BOWERSOCK
Submitted by: DAVID G. BROWN, P.E. CHIEF, CIVIL SECTION
File name:
Plot date: 2/4/2014
Plot scale:

U.S. ARMY ENGINEER DISTRICT, CORPS OF ENGINEERS FORT WORTH, TEXAS

ENGINEERING/ CONSTRUCTION DIVISION DESIGN BRANCH

DALLAS FLOODWAY LEVEES FEASIBILITY STUDY DALLAS, TEXAS

STORMWATER PREVENTION POLLUTION PLAN III (SHEET 3 OF 7)

Sheet reference number: CH103

Contr No.

DESIGN FILE: DF-LEVEE_STUDY-CH103.dgn

DF-LEVEE_STUDY-CH103.dgn 2/4/2014 5:21:44 PM

REFERENCE FILES:
P:\Trinity_Rvr_Bsn\Dallas_Fldwy\Civil_Engineering\COMPREHENSIVE_ANALYSIS\DF-FRM_SLOPE-FLATTEN_OUTLINE-spmdl.dgn
P:\Trinity_Rvr_Bsn\Dallas_Fldwy\Civil_Engineering\COMPREHENSIVE_ANALYSIS\DF-FRM_SWPPP-spmdl.dgn
P:\Trinity_Rvr_Bsn\Dallas_Fldwy\Civil_Engineering\COMPREHENSIVE_ANALYSIS_CAD Sheets\DF-C-bs.dgn
P:\Trinity_Rvr_Bsn\Dallas_Fldwy\Civil_Engineering\COMPREHENSIVE_ANALYSIS\DF-FRM_SWPPP-spmdl.dgn
P:\Trinity_Rvr_Bsn\Dallas_Fldwy\Civil_Engineering\COMPREHENSIVE_ANALYSIS_CAD Sheets\DF-C-spmdl.dgn

NOT FOR CONSTRUCTION; SCALED FOR FULL-SIZE PRINTS (34x22)

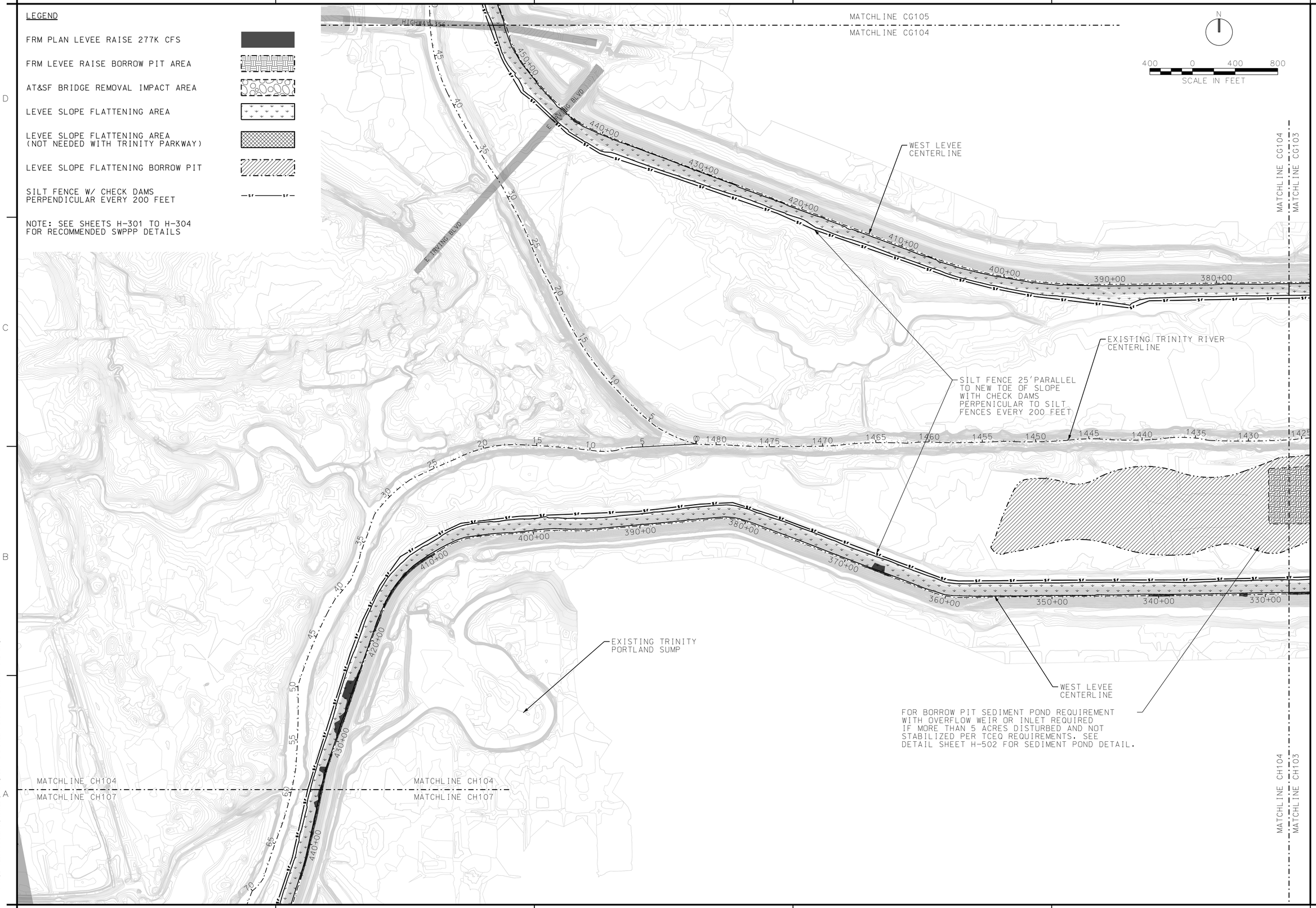

US Army Corps of Engineers
Fort Worth District

Symbol	Description	Tracking No.	Action	Date

Designed by: D. BOWERSOCK
Dwn by: D. DANG
Reviewed by: D. BOWERSOCK
Submitted by: DAVID G. BROWN, P.E. CHIEF, CIVIL SECTION
Date: 04 FEB 2014
Sol No.
Contr No.
Rev.
File name:
Plot date: 2/4/2014
Plot scale:

U.S. ARMY ENGINEER DISTRICT, CORPS OF ENGINEERS FORT WORTH, TEXAS

ENGINEERING/ CONSTRUCTION DIVISION DESIGN BRANCH

DALLAS FLOODWAY LEVEES FEASIBILITY STUDY DALLAS, TEXAS

STORMWATER PREVENTION POLLUTION PLAN IV (SHEET 4 OF 7)

Sheet reference number: CH104

DESIGN FILE: DF-LEVEE_STUDY-CH104.dgn

Contr No.

NOT FOR CONSTRUCTION; SCALED FOR FULL-SIZE PRINTS (34x22)

DF-LEVEE_STUDY-CH104.dgn 2/4/2014 5:21:51 PM

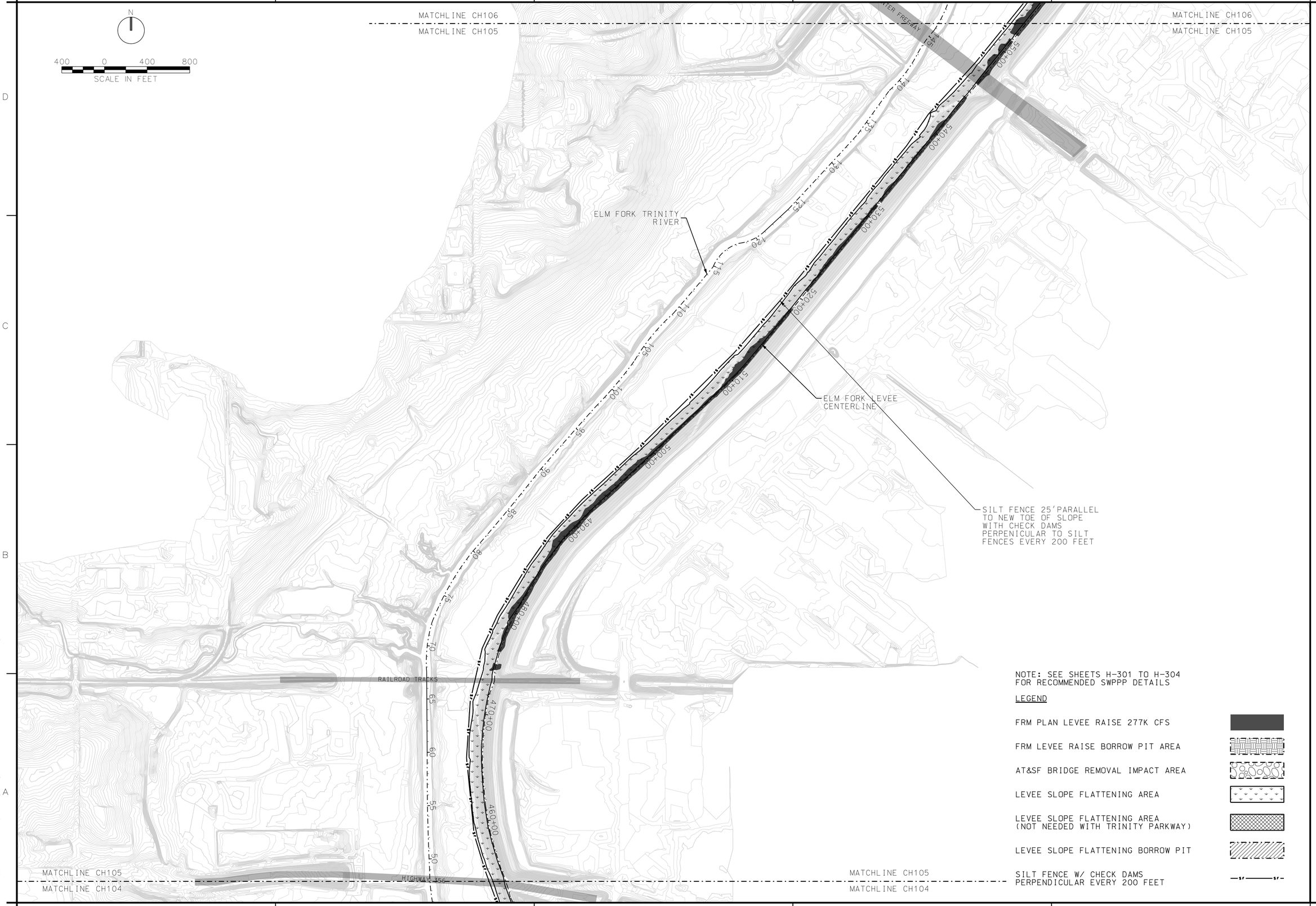

NOTE: SEE SHEETS H-301 TO H-304 FOR RECOMMENDED SWPPP DETAILS

LEGEND

- FRM PLAN LEVEE RAISE 277K CFS
- FRM LEVEE RAISE BORROW PIT AREA
- AT&SF BRIDGE REMOVAL IMPACT AREA
- LEVEE SLOPE FLATTENING AREA
- LEVEE SLOPE FLATTENING AREA (NOT NEEDED WITH TRINITY PARKWAY)
- LEVEE SLOPE FLATTENING BORROW PIT
- SILT FENCE W/ CHECK DAMS PERPENDICULAR EVERY 200 FEET

US Army Corps of Engineers
Fort Worth District

Symbol	Description	Tracking No.	Action	Date

Designed by: D. BOWERSOCK
Dwn by: D. DANG
Reviewed by: D. BOWERSOCK
Submitted by: DAVID G. BROWN, P.E. CHIEF, CIVIL SECTION
Date: 04 FEB 2014
Sol No.
Contr No.
File name:
Plot date: 2/4/2014
Plot scale:
Rev.

U.S. ARMY ENGINEER DISTRICT, CORPS OF ENGINEERS FORT WORTH, TEXAS

ENGINEERING/ CONSTRUCTION DIVISION DESIGN BRANCH

DALLAS FLOODWAY LEVEES FEASIBILITY STUDY DALLAS, TEXAS

STORMWATER PREVENTION POLLUTION PLAN V (SHEET 5 OF 7)

Sheet reference number: CH105

DESIGN FILE: DF-LEVEE_STUDY-CH105.dgn

Contr No.

NOT FOR CONSTRUCTION; SCALED FOR FULL-SIZE PRINTS (34x22)

DF-LEVEE_STUDY-CH105.dgn 2/4/2014 5:21:59 PM

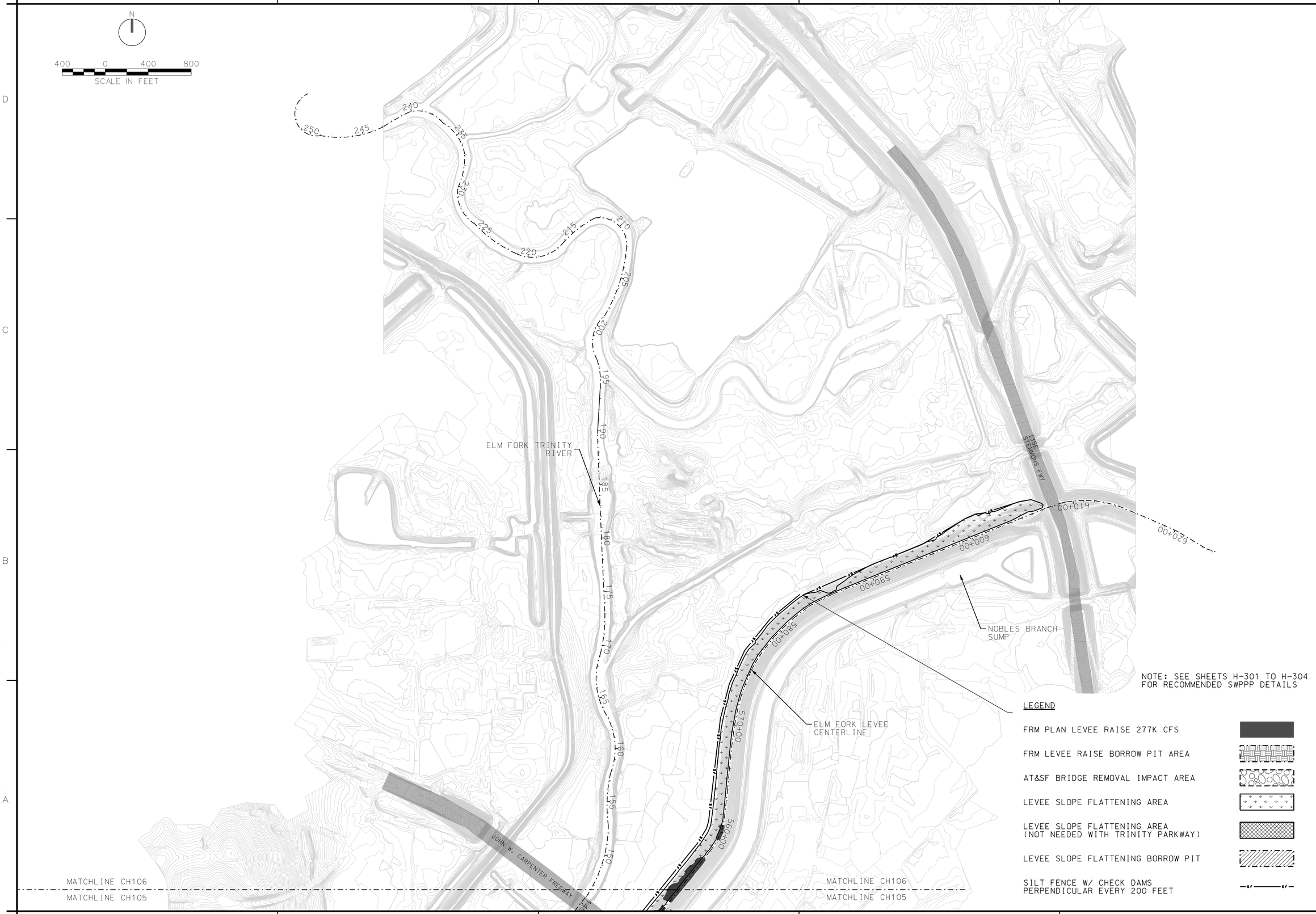

NOTE: SEE SHEETS H-301 TO H-304 FOR RECOMMENDED SWPPP DETAILS

LEGEND

- FRM PLAN LEVEE RAISE 277K CFS
- FRM LEVEE RAISE BORROW PIT AREA
- AT&SF BRIDGE REMOVAL IMPACT AREA
- LEVEE SLOPE FLATTENING AREA
- LEVEE SLOPE FLATTENING AREA (NOT NEEDED WITH TRINITY PARKWAY)
- LEVEE SLOPE FLATTENING BORROW PIT
- SILT FENCE W/ CHECK DAMS PERPENDICULAR EVERY 200 FEET

US Army Corps of Engineers
Fort Worth District

Symbol	Description	Tracking No.	Action	Date

Designed by: D. BOWERSOCK
Dwn by: D. DANG
Reviewed by: D. BOWERSOCK
Submitted by: DAVID G. BROWN, P.E. CHIEF, CIVIL SECTION
Date: 04 FEB 2014
Sol No.
Contr No.
Rev.
File name:
Plot date: 2/4/2014
Plot scale:

U.S. ARMY ENGINEER DISTRICT, CORPS OF ENGINEERS FORT WORTH, TEXAS

ENGINEERING/ CONSTRUCTION DIVISION DESIGN BRANCH

DALLAS FLOODWAY LEVEES FEASIBILITY STUDY DALLAS, TEXAS

STORMWATER PREVENTION POLLUTION PLAN VI (SHEET 6 OF 7)

Sheet reference number: CH106

DESIGN FILE: DF-LEVEE_STUDY-CH106.dgn

Contr No.

NOT FOR CONSTRUCTION; SCALED FOR FULL-SIZE PRINTS (34x22)

DF-LEVEE_STUDY-CH106.dgn 2/4/2014 5:22:03 PM

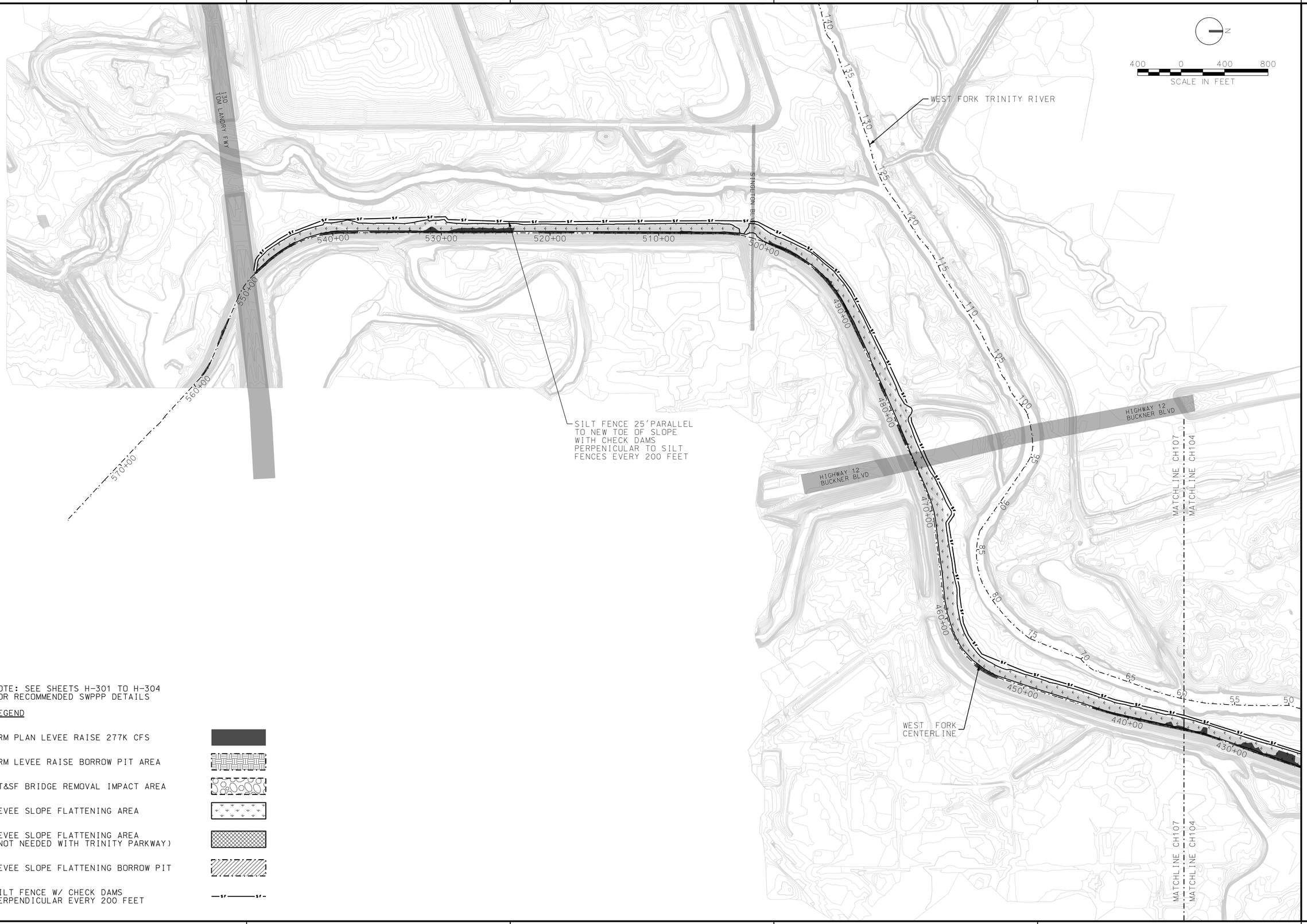

NOTE: SEE SHEETS H-301 TO H-304
FOR RECOMMENDED SWPPP DETAILS

LEGEND

FRM PLAN LEVEE RAISE 277K CFS

FRM LEVEE RAISE BORROW PIT AREA

AT&SF BRIDGE REMOVAL IMPACT AREA

LEVEE SLOPE FLATTENING AREA

LEVEE SLOPE FLATTENING AREA
(NOT NEEDED WITH TRINITY PARKWAY)

LEVEE SLOPE FLATTENING BORROW PIT

SILT FENCE W/ CHECK DAMS
PERPENDICULAR EVERY 200 FEET

REFERENCE FILES:
P:\Trinity_Rvr_Ben\Dallas_Fldwy\Civil_Engineering\COMPREHENSIVE_ANALYSIS\DF-FRM_SLOPE-FLATTEN_OUTLINE-spmdl.dgn
P:\Trinity_Rvr_Ben\Dallas_Fldwy\Civil_Engineering\COMPREHENSIVE_ANALYSIS\DF-FRM_Sheets\DF-C-bts.dgn
P:\Trinity_Rvr_Ben\Dallas_Fldwy\Civil_Engineering\COMPREHENSIVE_ANALYSIS\DF-FRM_SWPPP-spmdl.dgn
P:\Trinity_Rvr_Ben\Dallas_Fldwy\Civil_Engineering\COMPREHENSIVE_ANALYSIS\DF-C-kpmdl.dgn
P:\Trinity_Rvr_Ben\Dallas_Fldwy\Civil_Engineering\COMPREHENSIVE_ANALYSIS_CAD Sheets\DF-C-kpmdl.dgn

US Army Corps
of Engineers
Fort Worth District

Symbol	Description	Tracking No.	Action	Date

Designed by: D. BOWERSOCK
Date: 04 FEB 2014
Rev.
Dwn by: D. DANG
Sol No.
Contr No.
Reviewed by: D. BOWERSOCK
Submitted by: DAVID G. BROWN, P.E. CHIEF, CIVIL SECTION
File name:
Plot date: 2/4/2014
Plot scale:

U.S. ARMY ENGINEER DISTRICT,
CORPS OF ENGINEERS
FORT WORTH, TEXAS

ENGINEERING/
CONSTRUCTION DIVISION
DESIGN BRANCH

DALLAS FLOODWAY LEVEES
FEASIBILITY STUDY
DALLAS, TEXAS

STORMWATER PREVENTION
POLLUTION PLAN VII
(SHEET 7 OF 7)

Sheet
reference
number:
CH107

Contr No.

DESIGN FILE: DF-LEVEE_STUDY-CH107.dgn

DF-LEVEE_STUDY-CH107.dgn 2/4/2014 5:22:08 PM

NOT FOR CONSTRUCTION; SCALED FOR FULL-SIZE PRINTS (34x22)

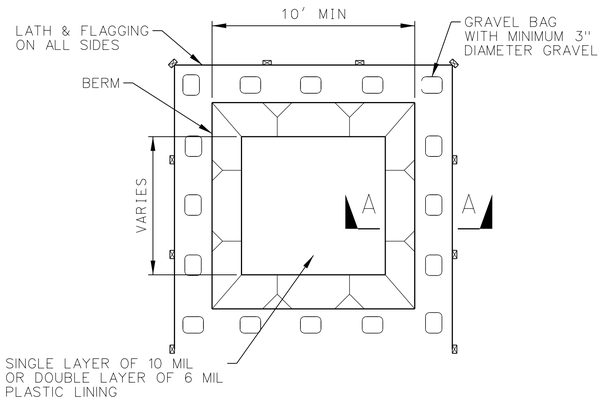

PLAN

(N.T.S.)
TYPE "BELOW GRADE"

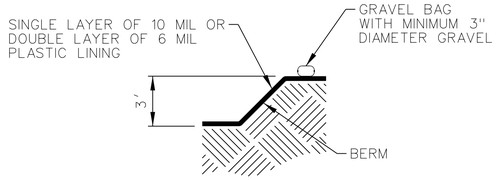

SECTION A-A

(N.T.S.)

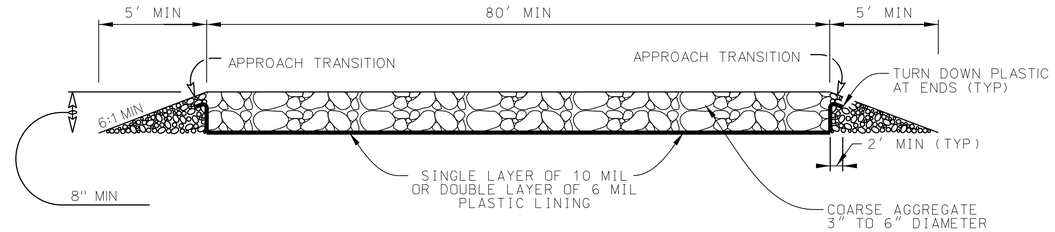

PROFILE

(N.T.S.)

DRAIN TO SEDIMENT TRAPPING DEVICE

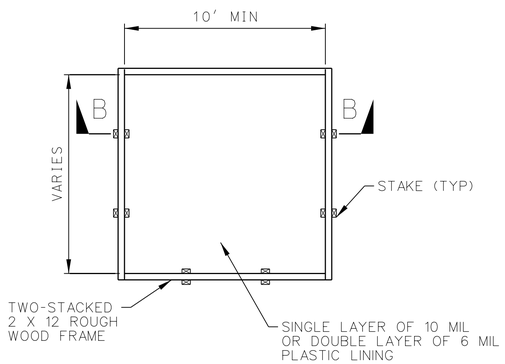

PLAN

(N.T.S.)
TYPE "ABOVE GRADE"

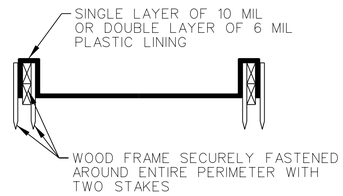

SECTION B-B

(N.T.S.)

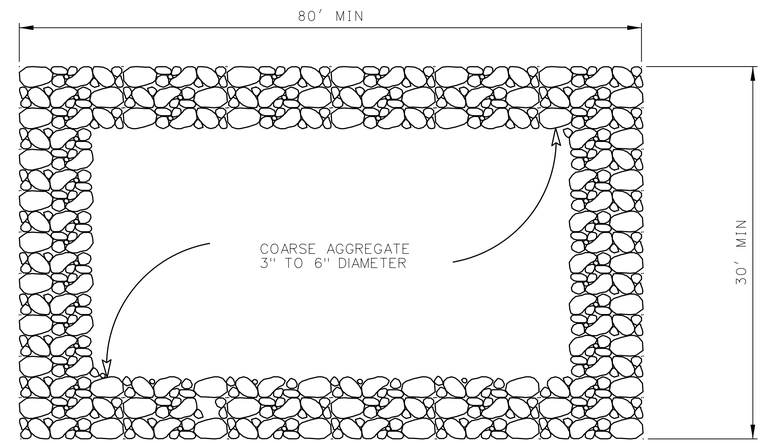

PLAN

(N.T.S.)

CONCRETE WASHOUT PIT

(N.T.S.)

WASH OUT PIT NOTES

1. ACTUAL LAYOUT DETERMINED IN FIELD.
2. WASHOUT PIT CAPACITY SHALL BE A MINIMUM OF 6 CUBIC FEET PER 10 CUBIC YARDS OF CONCRETE PLACED.
3. CONCRETE WASHOUT SIGNAGE SHALL BE INSTALLED WITHIN 30 FEET OF THE TEMPORARY WASHOUT PIT.
4. WASHOUT PIT SHALL BE MAINTAINED BY THE CONTRACTOR DURING CONSTRUCTION TO AVOID RUNOFF, AND EXCESS CONCRETE SHALL BE REMOVED FOR RECYCLING.

GENERAL NOTES

1. THE BMP DETAILS SHOWN ARE NOT ALL INCLUSIVE.
2. CONTRACTOR SHALLMAINTAIN THE DETAILS FOR EACH BMP UTILIZED DURING CONSTRUCTIONIN THE STORM WATER POLLUTION PREVENTION PLAN.

STABILIZED CONSTRUCTION ACCESS

(N.T.S.)

STABILIZED CONSTRUCTION NOTES

1. CONSTRUCTION ACCESS SHALL BE A MINIMUM OF 80 FEET IN LENGTH AND 30 FEET IN WIDTH
2. COARSE AGGREGATE SHALL BE OPEN GRADED AND BE UNDERLAID WITH A SINGLE LAYER OF 10 MIL OR A DOUBLE LAYER OF 6 MIL PLASTIC LINING
3. A SLOPE NO STEEPER THAN 6:1 SHOULD BE USED FOR APPROACH TRANSITIONS.
4. CONSTRUCTION ACCESS SHALL BE GRADED TO ALLOW DRAINAGE TO A SEDIMENT TRAPPING DEVICE.

US Army Corps of Engineers
Fort Worth District

Symbol	Description	Tracking No.	Action	Date

Date: 04 FEB 2014
Sol No.
Contr No.
Rev.
File name:
Plot date: 2/4/2014
Plot scale:

Designed by: C. CHINI
Dwn by: D. DANG
Reviewed by: D. BOWERSOCK
Submitted by: DAVID G. BROWN, P.E. CHIEF, CIVIL SECTION

U.S. ARMY ENGINEER DISTRICT, CORPS OF ENGINEERS FORT WORTH, TEXAS

ENGINEERING/ CONSTRUCTION DIVISION DESIGN BRANCH

DALLAS FLOODWAY LEVEES FEASIBILITY STUDY DALLAS, TEXAS

STORMWATER PREVENTION POLLUTION PLAN RECOMMEND DETAIL 1

Sheet reference number: H-501

DESIGN FILE: DF-LEVEE_STUDY-H-501.dgn

Contr No.

DF-LEVEE_STUDY-H-501.dgn 2/4/2014 3:41:18 PM

REFERENCE FILES:
P:\Trinity_Rvr_Bsn\Dallas_Fldwy\Civil_Engineering\COMPREHENSIVE_ANALYSIS_CAD Sheets\DF G-bs.dgn
P:\Trinity_Rvr_Bsn\Dallas_Fldwy\Civil_Engineering\COMPREHENSIVE_ANALYSIS_CAD Sheets\404B-SWPPP-EXHIBITS\DF-LEVEE_STUDY_H-dtmdl.dgn

NOT FOR CONSTRUCTION; SCALED FOR FULL-SIZE PRINTS (34x22)

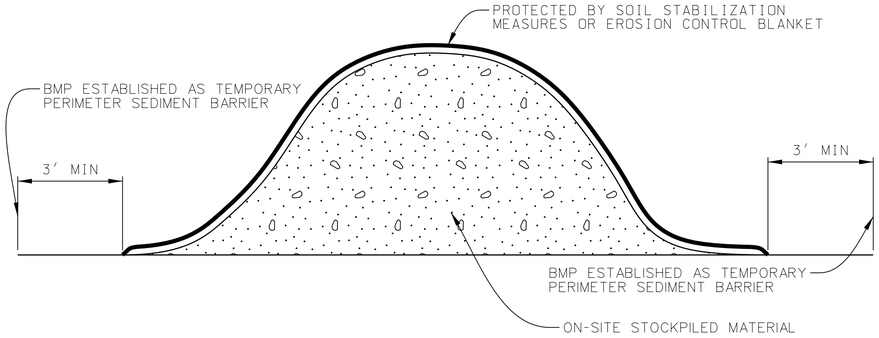

PROFILE
(N.T.S.)

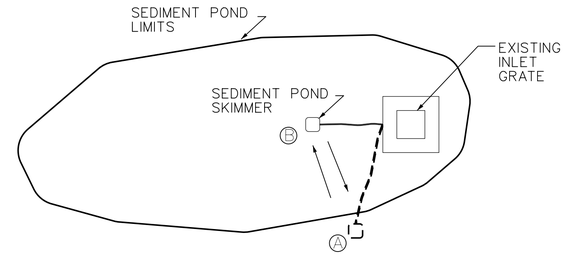

PLAN VIEW
(N.T.S.)

POND SKIMMER NOTE:

1. SEDIMENT POND SKIMMER SHALL REMAIN ON THE BANK (LOCATION A) UNTIL 3 DAYS AFTER THE RAINFALL EVENT TO ALLOW SILT PARTICLES TO SETTLE. AT THAT TIME THE SKIMMER IS TO BE MOVED TO THE LOW POINT OF THE SEDIMENT POND (LOCATION B), AND TURNED "ON" UNTIL THE POND IS DRY.

2. SEDIMENT POND SKIMMER SHALL BE A FAIRCLOTH SKIMMER OR APPROVED EQUAL. (WWW.FAIRCLOTHSKIMMER.COM)

3. SKIMMER SHALL BE INSTALLED IN ACCORDANCE WITH THE MANUFACTURER'S RECOMMENDATIONS.

4. SKIMMER MUST BE SIZED TO DRAIN THE POND A MINIMUM OF 3 DAYS AND A MAXIMUM OF 4 DAYS.

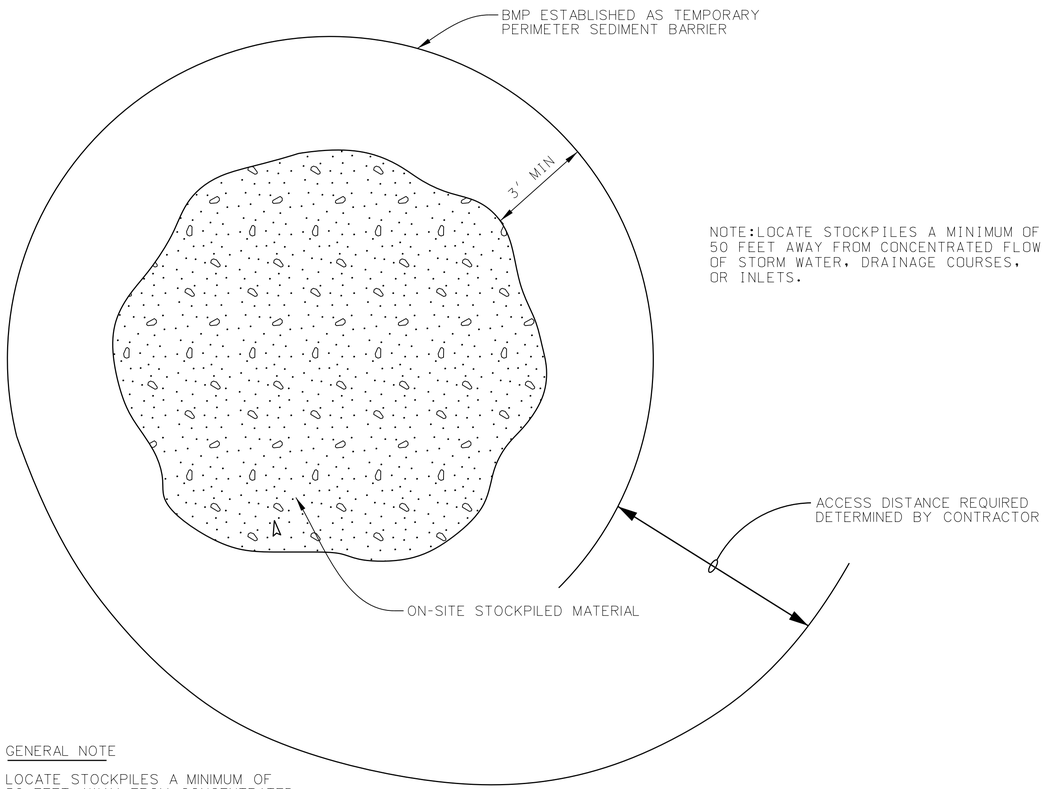

NOTE:LOCATE STOCKPILES A MINIMUM OF 50 FEET AWAY FROM CONCENTRATED FLOW OF STORM WATER, DRAINAGE COURSES, OR INLETS.

GENERAL NOTE

LOCATE STOCKPILES A MINIMUM OF 50 FEET AWAY FROM CONCENTRATED FLOW OF STORM WATER, DRAINAGE COURSES, OR INLETS.

PLAN
(N.T.S.)

STOCKPILED MATERIAL BMP
(N.T.S.)

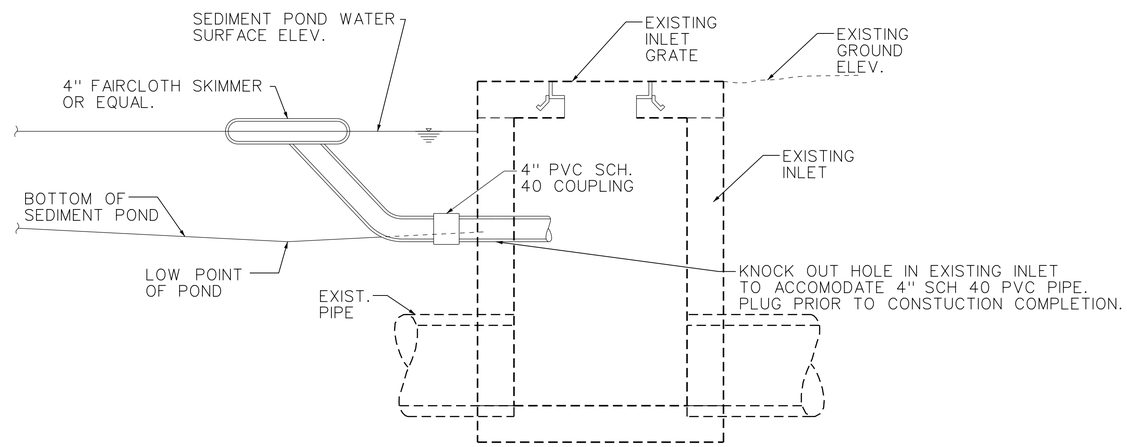

SEDIMENT BASIN SKIMMER INSTALLATION
(N.T.S.)

GENERAL NOTES

1. THE BMP DETAILS SHOWN ARE NOT ALL INCLUSIVE.

2. CONTRACTOR SHALLMAINTAIN THE DETAILS FOR EACH BMP UTILIZED DURING CONSTRUCTIONIN THE STORM WATER POLLUTION PREVENTION PLAN.

US Army Corps of Engineers
Fort Worth District

Symbol	Description	Tracking No.	Action	Date

Designed by: D. BOWERSOCK
Dwn by: D. DANG
Reviewed by: D. BOWERSOCK
Submitted by: DAVID G. BROWN, P.E. CHIEF, CIVIL SECTION
Date: 04 FEB 2014
Sol No.
Contr No.
Rev.
File name:
Plot date: 2/4/2014
Plot scale:

U.S. ARMY ENGINEER DISTRICT, CORPS OF ENGINEERS FORT WORTH, TEXAS

ENGINEERING/ CONSTRUCTION DIVISION DESIGN BRANCH

DALLAS FLOODWAY LEVEES FEASIBILITY STUDY DALLAS, TEXAS

STORMWATER PREVENTION POLLUTION PLAN RECOMMEND DETAIL II

Sheet reference number: H-502

DESIGN FILE: DF-LEVEE_STUDY-H-502.dgn

Contr No.

DF-LEVEE_STUDY-H-502.dgn 2/4/2014 3:41:19 PM

REFERENCE FILES:
P:\Trinity_Rvr_Bsn\Dallas_Fldwy\Civil_Engineering\COMPREHENSIVE_ANALYSIS_CAD Sheets\DF-G-bsc.dgn
P:\Trinity_Rvr_Bsn\Dallas_Fldwy\Civil_Engineering\COMPREHENSIVE_ANALYSIS_CAD Sheets\404B-SWPPP-EXHIBITS\DF-LEVEE_STUDY_H-dtmdl.dgn

NOT FOR CONSTRUCTION; SCALED FOR FULL-SIZE PRINTS (34x22)

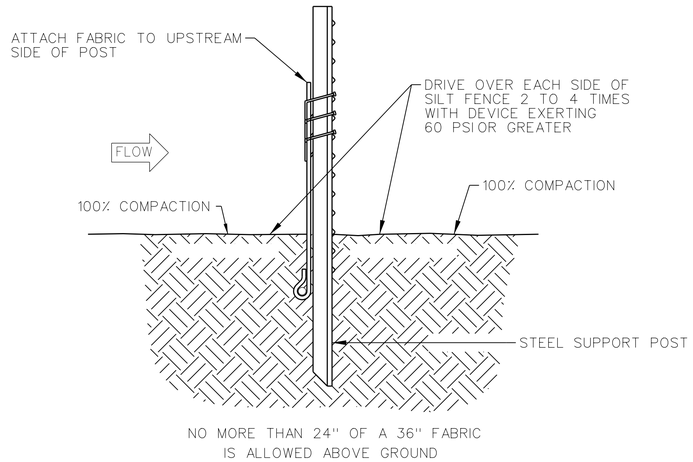

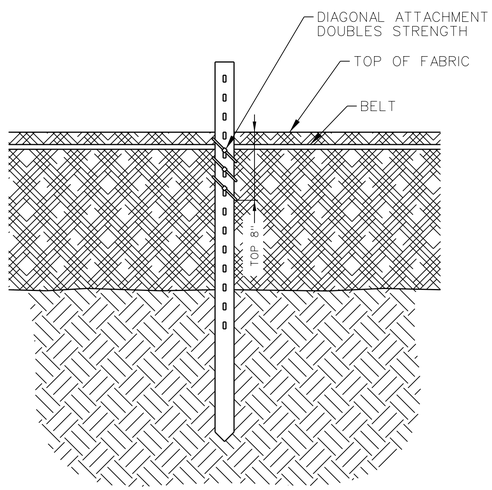

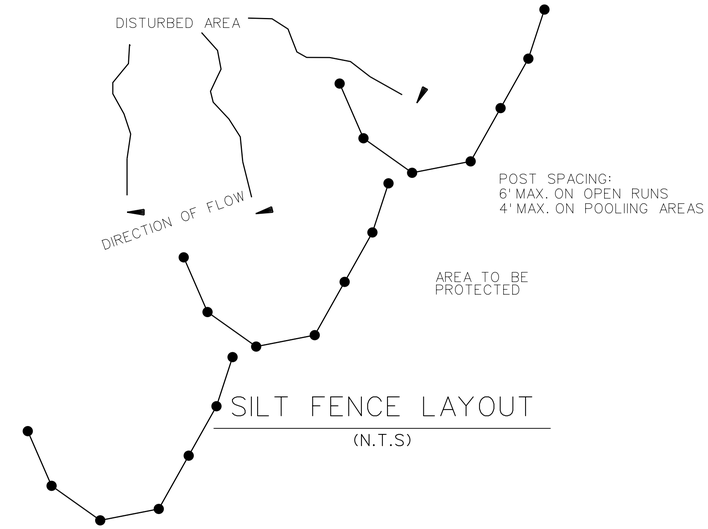

SILT FENCE LAYOUT

(N.T.S)

SILT FENCE LAYOUT

(N.T.S.)

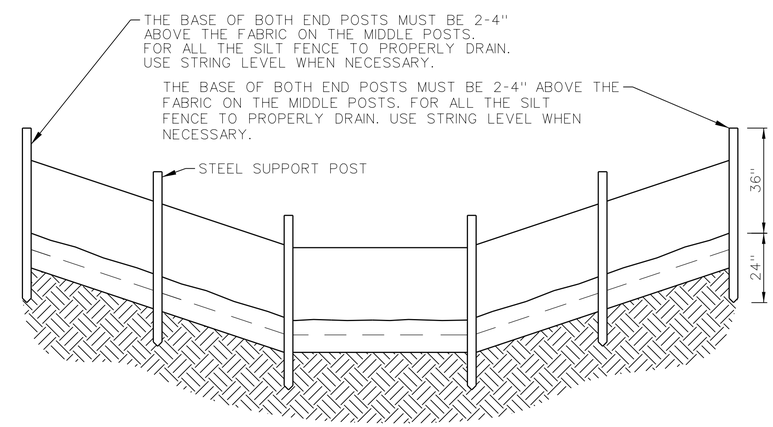

SILT FENCE - STATIC SLICING METHOD (PER ASTM D6462-03)

(N.T.S.)

SILT FENCE NOTES

1. SILT FENCE SHALL BE INSTALLED USING A NARROW CUSTOM-SHAPED BLADE AT LEAST 10 INCHES PENETRATED INTO THE GROUND AND SIMULTANEOUSLY PULLING SILT FENCE FABRIC INTO THE OPENING CREATED AS THE BLADE IS PULLED THROUGH THE GROUND. AFTER INSTALLING THE FABRIC, THE DISRUPTED SOIL SHALL BE COMPACTED ON BOTH SIDES OF FABRIC.
2. INSTALLATION TO BE COMPLETED IN ACCORDANCE WITH MANUFACTURER'S SPECIFICATIONS.
3. GATHER FABRIC AT POSTS, IF NEEDED.
4. UTILIZE THREE TIES PER POST, ALL WITHIN TOP 8" OF FABRIC.
5. POSITION EACH TIE DIAGONALLY, PUNCTURING HOLES VERTICALLY AT A MINIMUM OF 1" APART.
6. HANG EACH TIE ON A POST NIPPLE AND TIGHTEN SECURELY. USE CABLE TIES (50 LBS) OR SOFT WIRE.
7. SILT FENCE FABRIC SHALL COMPLY WITH ASTM D6461.
8. NO SILT FENCE RUNS TO BE LONGER THAN 200 FEET.
9. THE MAXIMUM AREA FOR A SILT FENCE CONTROL AREA SHOULD BE APPROXIMATELY 5000 SQUARE FEET.
10. THE MAXIMUM SLOPE LENGTH ABOVE A SILT FENCE SHOULD BE APPROXIMATELY 100 LINEAR FEET.
11. SILT FENCE SHOULD CREATE A STORAGE AREA FOR PONDING.

GENERAL NOTES

1. THE BMP DETAILS SHOWN ARE NOT ALL INCLUSIVE.
2. CONTRACTOR SHALL MAINTAIN THE DETAILS FOR EACH BMP UTILIZED DURING CONSTRUCTIONIN THE STORM WATER POLLUTION PREVENTION PLAN.

US Army Corps of Engineers
Fort Worth District

Symbol	Description	Tracking No.	Action	Date

Date: 04 FEB 2014
Sol No.
Contr No.
Rev.
File name:
Plot date: 2/4/2014
Plot scale:

Designed by: D. BOWERSOCK
Dwn by: D. DANG
Reviewed by: D. BOWERSOCK
Submitted by: DAVID G. BROWN, P.E. CHIEF, CIVIL SECTION

U.S. ARMY ENGINEER DISTRICT, CORPS OF ENGINEERS FORT WORTH, TEXAS

ENGINEERING/ CONSTRUCTION DIVISION DESIGN BRANCH

DALLAS FLOODWAY LEVEES FEASIBILITY STUDY DALLAS, TEXAS

STORMWATER PREVENTION POLLUTION PLAN RECOMMEND DETAIL III

Sheet reference number: H-503

DESIGN FILE: DF-LEVEE_STUDY-H-503.dgn

Contr No.

NOT FOR CONSTRUCTION; SCALED FOR FULL-SIZE PRINTS (34x22)

DF-LEVEE_STUDY-H-503.dgn 2/4/2014 3:41:20 PM
REFERENCE FILES:
P:\Trinity_Rvr_Bsn\Dallas_Fldwy\Civil_Engineering\COMPREHENSIVE_ANALYSIS_CAD Sheets\DF-G-bs.dgn
P:\Trinity_Rvr_Bsn\Dallas_Fldwy\Civil_Engineering\COMPREHENSIVE_ANALYSIS_CAD Sheets\404B-SWPPP-EXHIBITS\DF-LEVEE_STUDY_H-dtmdl.dgn

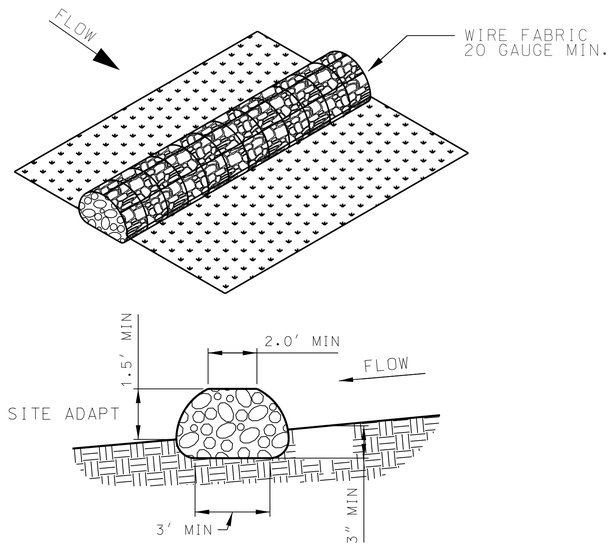

ROCK BERM OR CHECK DAM

(N.T.S.)

NOTES:

1. USE ONLY OPEN GRADED ROCK WITH A DIAMETER OF 4 TO 8 INCHES FOR STREAM FLOW CONDITIONS. USE OPEN GRADED ROCK WITH A DIAMETER OF 3 TO 5 INCHES FOR OTHER CONDITIONS.
2. THE ROCK BERM SHALL BE SECURED WITH A WOVEN WIRE SHEATHING HAVING MAXIMUM 1 INCH OPENING AND MINIMUM WIRE DIAMETER OF 20 GAUGE.
3. CONTRACTOR SHALL REMOVE AND DISPOSE OF SEDIMENT WHEN IT ACCUMULATES TO ONE-THIRD THE HEIGHT OF THE BERM.
4. CHECK DAMS MAY BE INSTALLED IN STEEPLY SLOPED SWALES, OR IN SWALES WHERE ADEQUATE VEGETATION CANNOT BE ESTABLISHED. DAMS SHOULD NOT BE PLACED IN STREAMS.
5. CHECK DAMS SHALL BE SPACED SO THAT THE TOE OF THE UPSTREAM DAM IS AT THE SAME ELEVATION AS THE TOP OF THE DOWNSTREAM DAM.
6. CONTRACTOR SHALL INSPECT CHECK DAMS FOR SEDIMENT AND DEBRIS ACCUMULATION AFTER EACH SIGNIFICANT RAINFALL.
7. CONTRACTOR MAY USE ORGANIC FILTER BERM CHECK DAM OR FILTER SOCK CHECK DAM IN LIEU OF ROCK BERM OR CHECK DAM.

US Army Corps of Engineers
Fort Worth District

Symbol	Description	Tracking No.	Action	Date

Designed by: D. BOWERSOCK
Dwn by: D. DANG
Reviewed by: D. BOWERSOCK
Submitted by: DAVID G. BROWN, P.E. CHIEF, CIVIL SECTION
Date: 04 FEB 2014
Sol No.
Contr No.
Rev.
File name:
Plot date: 2/4/2014
Plot scale:

U.S. ARMY ENGINEER DISTRICT, CORPS OF ENGINEERS FORT WORTH, TEXAS

ENGINEERING/ CONSTRUCTION DIVISION DESIGN BRANCH

DALLAS FLOODWAY LEVEES FEASIBILITY STUDY DALLAS, TEXAS

STORMWATER PREVENTION POLLUTION PLAN RECOMMEND DETAIL IV

Sheet reference number: H-504

Contr No.

DESIGN FILE: DF-LEVEE_STUDY-H-504.dgn

DF-LEVEE_STUDY-H-504.dgn 2/4/2014 3:41:21 PM

REFERENCE FILES:
P:\Trinity_Rvr_Bsn\Dallas_Fldwy\Civil_Engineering\COMPREHENSIVE_ANALYSIS_CAD Sheets\DF-G-bs.dgn
P:\Trinity_Rvr_Bsn\Dallas_Fldwy\Civil_Engineering\COMPREHENSIVE_ANALYSIS_CAD Sheets\404B-SWPPP-EXHIBITS\DF-LEVEE_STUDY_H-dtmdl.dgn

NOT FOR CONSTRUCTION; SCALED FOR FULL-SIZE PRINTS (34x22)